NISSAN

MODEL S14 SERIES

QUICK REFERENCE INDEX

GENERAL INFORMATION	GI
MAINTENANCE	MA
ENGINE MECHANICAL	EM
ENGINE LUBRICATION & COOLING SYSTEMS	LC
ENGINE CONTROL SYSTEM	EC
ACCELERATOR CONTROL, FUEL & EXHAUST SYSTEMS	FE
CLUTCH	CL
MANUAL TRANSMISSION	MT
AUTOMATIC TRANSMISSION	AT
PROPELLER SHAFT & DIFFERENTIAL CARRIER	PD
FRONT AXLE & FRONT SUSPENSION	FA
REAR AXLE & REAR SUSPENSION	RA
BRAKE SYSTEM	BR
STEERING SYSTEM	ST
RESTRAINT SYSTEM	RS
BODY & TRIM	BT
HEATER & AIR CONDITIONER	HA
ELECTRICAL SYSTEM	EL
ALPHABETICAL INDEX	IDX

© 1994 NISSAN MOTOR CO., LTD. Printed in Japan

Not to be reproduced in whole or in part without the prior written permission of Nissan Motor Company Ltd., Tokyo, Japan.

Observe the following precautions to ensure safe and proper servicing.

SGI646

Precautions for Supplemental Restraint System "AIR BAG" and "SEAT BELT PRE-TENSIONER"

The Supplemental Restraint System "Air Bag" and "Seat belt pre-tensioner", used along with a seat belt, help to reduce the risk or severity of injury to the driver and front passenger in a frontal collision. The Supplemental Restraint System consists of air bag modules (located in the center of the steering wheel and on the instrument panel on the passenger side), a seat belt pre-tensioner, a diagnosis sensor unit, warning lamp, wiring harness and spiral cable. Information necessary to service the system safely is included in the RS section of this Service Manual.

WARNING:

- **To avoid rendering the SRS inoperative, which could increase the risk of personal injury or death in the event of a collision which would result in air bag inflation, all maintenance must be performed by an authorized NISSAN dealer.**
- **Improper maintenance, including incorrect removal and installation of the SRS, can lead to personal injury caused by unintentional activation of the system.**
- **All SRS electrical wiring harnesses and connectors are covered with yellow outer insulation. Do not use electrical test equipment on any circuit related to the SRS.**

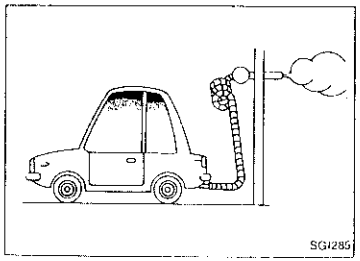
SGI285

General Precautions

- Do not operate the engine for an extended period of time without proper exhaust ventilation.
  Keep the work area well ventilated and free of any flammable materials. Special care should be taken when handling any flammable or poisonous materials, such as gasoline, refrigerant gas, etc. When working in a pit or other enclosed area, be sure to properly ventilate the area before working with hazardous materials.
  Do not smoke while working on the vehicle.

General Precautions (Cont'd)

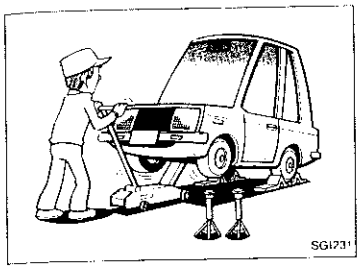
SGI231

- Before jacking up the vehicle, apply wheel chocks or other tire blocks to the wheels to prevent the vehicle from moving. After jacking up the vehicle, support the vehicle weight with safety stands at the points designated for proper lifting before working on the vehicle.
  These operations should be done on a level surface.
- When removing a heavy component such as the engine or transaxle/transmission, be careful not to lose your balance and drop them. Also, do not allow them to strike adjacent parts, especially the brake tubes and master cylinder.

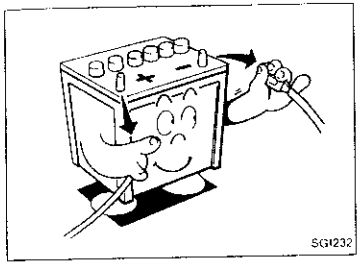
SGI232

- Before starting repairs which do not require battery power, always turn off the ignition switch, then disconnect the ground cable from the battery to prevent accidental short circuit.

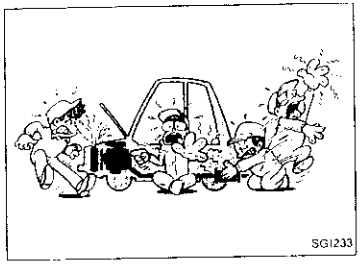
SGI233

- To prevent serious burns, avoid contact with hot metal parts such as the radiator, exhaust manifold, tail pipe and muffler. Do not remove the radiator cap when the engine is hot.

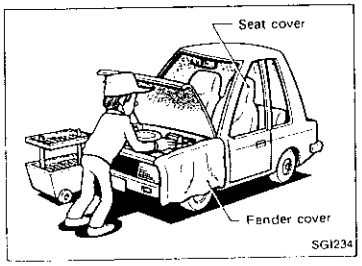

SGI234

- Before servicing the vehicle, protect fenders, upholstery and carpeting with appropriate covers.
  Take caution that keys, buckles or buttons on your person do not scratch the paint.

- Clean all disassembled parts in the designated liquid or solvent prior to inspection or assembly
- Replace oil seals, gaskets, packings, O-rings, locking washers, cotter pins, self-locking nuts, etc. with new ones.
- Replace inner and outer races of tapered roller bearings and needle bearings as a set.
- Arrange the disassembled parts in accordance with their assembled locations and sequence
- Do not touch the terminals of electrical components which use microcomputers (such as ECMs).
  Static electricity may damage internal electronic components

General Precautions (Cont'd)

- After disconnecting vacuum or air hoses, attach a tag to indicate the proper connection.
- Use only the fluids and the lubricants specified in MA section and HA section or their equivalents.
- Use approved bonding agent, sealants or their equivalents when required.
- Use tools and recommended special tools where specified for safe and efficient service repairs.
- When repairing the fuel, oil, water, vacuum or exhaust systems, check all affected lines for leaks.
- Dispose of drained oil or the solvent used for cleaning parts in an appropriate manner.

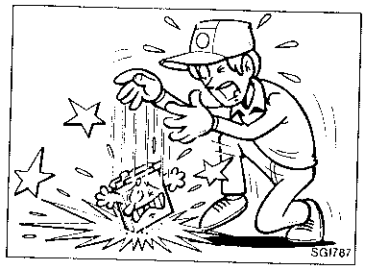

Precautions for Multiport Fuel Injection System or ECCS Engine

- Before connecting or disconnecting multiport fuel injection system or ECM (ECCS control module) harness connector, be sure to turn the ignition switch to the "OFF" position and disconnect the negative battery terminal.
  Otherwise, there may be damage to ECM.
- Before disconnecting pressurized fuel line from fuel pump to injectors, be sure to release fuel pressure to eliminate danger.
- Be careful not to jar components such as ECM and mass air flow sensor.

Precautions for Three Way Catalyst

If a large amount of unburned fuel flows into the converter, the converter temperature will be excessively high. To prevent this, follow the procedure below:

1. Use unleaded gasoline only. Leaded gasoline will seriously damage the three way catalyst.
2. When checking for ignition spark or measuring engine compression, make tests quickly and only when necessary.
3. Do not run engine when the fuel tank level is low, otherwise the engine may misfire causing damage to the converter.

Do not place the vehicle on flammable material. Keep flammable material off the exhaust pipe and the three way catalyst.

Precautions for Turbocharger

The turbocharger turbine revolves at extremely high speeds and becomes very hot. Therefore, it is essential to maintain a clean supply of oil flowing through the turbocharger and to follow all required maintenance instructions and operating procedures.

For proper operation of the system, follow the procedure below.

1. Always use the recommended oil. Follow the instructions for proper time to change the oil and proper oil level.
2. Avoid accelerating engine to a high rpm immediately after starting.
3. If engine had been operating at high rpm for an extended period of time, let it idle for a few minutes prior to shutting it off.

Engine Oils

Prolonged and repeated contact with used engine oil may cause skin cancer. Try to avoid direct skin contact with used oil. If skin contact is made, wash thoroughly with soap or hand cleaner as soon as possible.

HEALTH PROTECTION PRECAUTIONS

- Avoid prolonged and repeated contact with oils, particularly used engine oils.
- Wear protective clothing, including impervious gloves where practicable.
- Do not put oily rags in pockets.
- Avoid contaminating clothes, particularly underpants, with oil.
- Heavily soiled clothing and oil-impregnated footwear should not be worn. Overalls must be cleaned regularly.
- First Aid treatment should be obtained immediately for open cuts and wounds.
- Use barrier creams, applying them before each work period, to help the removal of oil from the skin.
- Wash with soap and water to ensure all oil is removed (skin cleansers and nail brushes will help). Preparations containing lanolin replace the natural skin oils which have been removed.
- Do not use gasoline, kerosine, diesel fuel, gas oil, thinners or solvents for cleaning skin.
- If skin disorders develop, obtain medical advice without delay.
- Where practicable, degrease components prior to handling.
- Where there is a risk of eye contact, eye protection should be worn, for example, chemical goggles or face shields; in addition an eye wash facility should be provided.

ENVIRONMENTAL PROTECTION PRECAUTIONS

Burning used engine oil in small space heaters or boilers can be recommended only for units of approved design. The heating system must meet the requirements of HM Inspectorate of Pollution for small burners of less than 0.4 MW. If in doubt check with the appropriate local authority and/or manufacturer of the approved appliance.

Dispose of used oil and used oil filters through authorized waste disposal contractors to licensed waste disposal sites, or to the waste oil reclamation trade. If in doubt, contact the local authority for advice on disposal facilities.

It is illegal to pour used oil on to the ground, down sewers or drains, or into water courses.

The regulations concerning the pollution of the environment will vary from country to country.

Precautions for Fuel

Unleaded premium gasoline with an octane rating of at least 95 AKI (Anti-Knock Index) number (Research octane number 96).

CAUTION:

Using a fuel other than that specified could adversely affect the emission control devices and systems, and could also affect the warranty coverage validity.

Under no circumstances should a leaded gasoline be used, since this will damage the three way catalyst.

- ALPHABETICAL INDEX is provided at the end of this manual so that you can rapidly find the item and page you are searching for.
- **A QUICK REFERENCE INDEX,** a black tab (e.g. BR) is provided on the first page. You can quickly find the first page of each section by mating it to the section's black tab.
- **THE CONTENTS** are listed on the first page of each section.
- **THE TITLE** is indicated on the upper portion of each page and shows the part or system.
- **THE PAGE NUMBER** of each section consists of two letters which designate the particular section and a number (e.g. "BR-5").
- **THE LARGE ILLUSTRATIONS** are exploded views (See below) and contain tightening torques, lubrication points, section number of the **PARTS CATALOG** (e.g. SEC.440) and other information necessary to perform repairs.
  The illustrations should be used in reference to service matters only. When ordering parts, refer to the appropriate **PARTS CATALOG.**

"Example"

SEC. 440

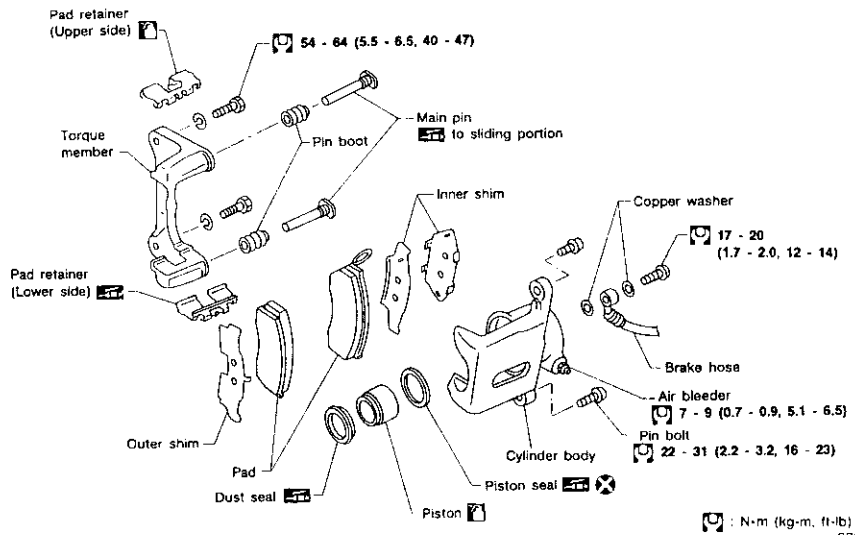

- **THE SMALL ILLUSTRATIONS** show the important steps such as inspection, use of special tools, knacks of work and hidden or tricky steps which are not shown in the previous large illustrations. Assembly, inspection and adjustment procedures for the complicated units such as the automatic transaxle or transmission, etc. are presented in a step-by-step format where necessary.

- The following **SYMBOLS AND ABBREVIATIONS** are used:

	:	Tightening torque	M/T	:	Manual Transaxle/Transmission
	:	Should be lubricated with grease. Unless otherwise indicated, use recommended multi-purpose grease.	A/T	:	Automatic Transaxle/ Transmission
			A/C	:	Air Conditioner
			P/S	:	Power Steering
	:	Should be lubricated with oil.	Tool	:	Special Service Tools
	:	Sealing point	SAE	:	Society of Automotive Engineers, Inc.
	:	Checking point			
	:	Always replace after every disassembly.	ATF	:	Automatic Transmission Fluid
	:	Apply petroleum jelly.	D_1	:	Drive range 1st gear
ATF	:	Apply ATF	D_2	:	Drive range 2nd gear
★	:	Select with proper thickness.	D_3	:	Drive range 3rd gear
☆	:	Adjustment is required.	D_4	:	Drive range 4th gear
SDS	:	Service Data and Specifications	OD	:	Overdrive
LH, RH	:	Left-Hand, Right-Hand	2_2	:	2nd range 2nd gear
FR, RR	:	Front, Rear	2_1	:	2nd range 1st gear
			1_2	:	1st range 2nd gear
			1_1	:	1st range 1st gear

- The **UNITS** given in this manual are primarily expressed as the SI UNIT (International System of Unit), and alternatively expressed in the metric system and in the yard/pound system.
  "Example"
  Tightening torque:
  59 - 78 N·m (6.0 - 8.0 kg-m, 43 - 58 ft-lb)
- **TROUBLE DIAGNOSES** are included in sections dealing with complicated components.
- **SERVICE DATA AND SPECIFICATIONS** are contained at the end of each section for quick reference of data.
- The captions **WARNING** and **CAUTION** warn you of steps that must be followed to prevent personal injury and/or damage to some part of the vehicle.
  WARNING indicates the possibility of personal injury if instructions are not followed.
  CAUTION indicates the possibility of component damage if instructions are not followed.
  BOLD TYPED STATEMENTS except **WARNING** and **CAUTION** give you helpful information.

Sample/Wiring Diagram — EXAMPL —

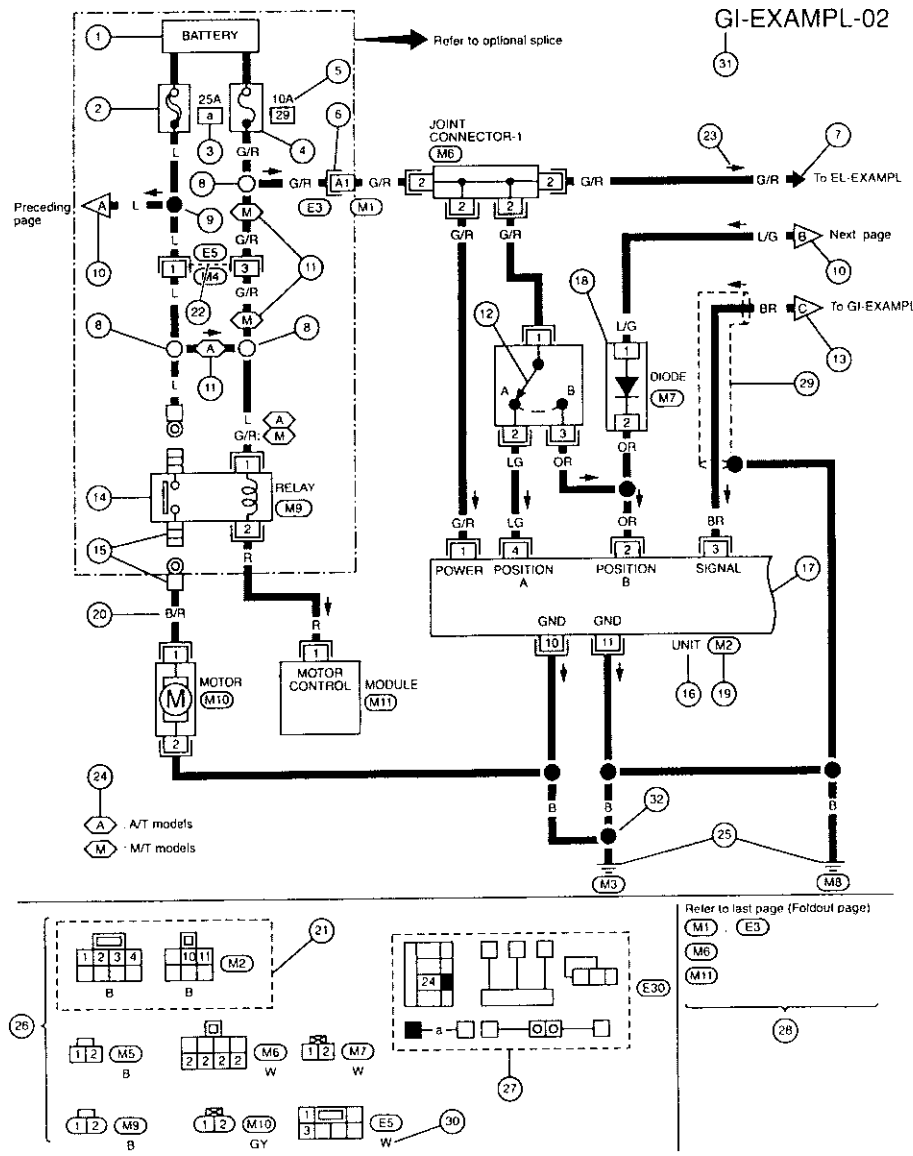

SGI857

Sample/Wiring Diagram — EXAMPL — (Cont'd)

OPTIONAL SPLICE

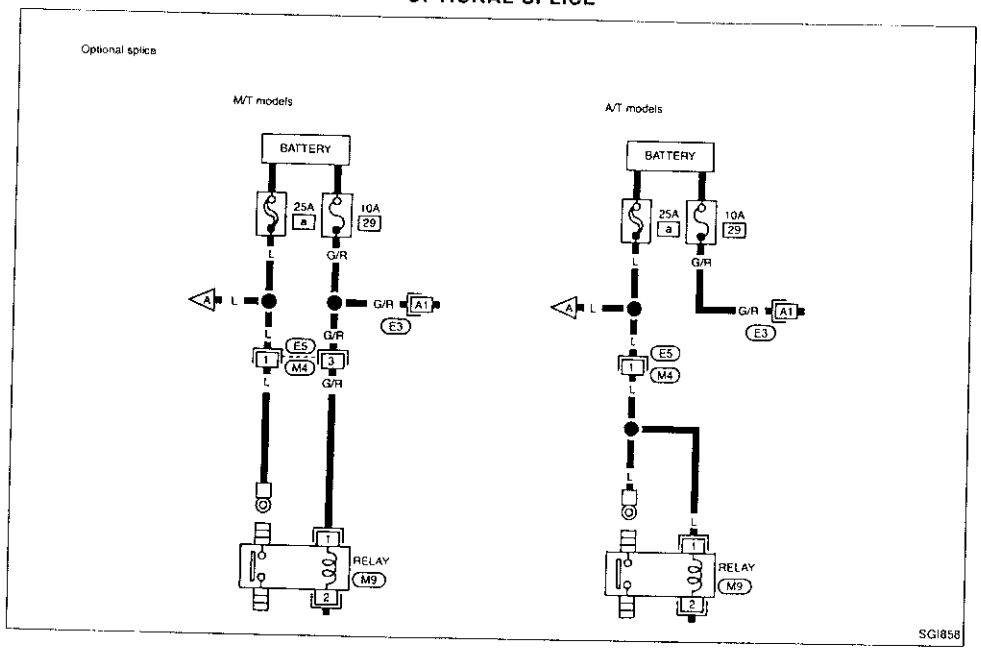

Description

Number	Item	Description
1	Power condition	• This shows the condition when the system receives battery positive voltage (can be operated)
2	Fusible link	• The double line shows that this is a fusible link • The open circle shows current flow in and the shaded circle shows current flow out.
3	Fusible link/fuse location	• This shows the location of the fusible link or fuse in the fusible link or fuse box. See "POWER SUPPLY ROUTING" in EL section for arrangement.
4	Fuse	• The single line shows that this is a fuse. • The open circle shows current flow in and the shaded circle shows current flow out.
5	Current rating	• This shows the current rating of the fusible link or fuse
6	Connectors	• This shows that connector (E3) is female and connector (M1) is male. • The G/R wire is located in the A1 terminal of both connectors. • Terminal No. with an alphabet (A1, B5, etc.) indicates that the connector is SMJ connector. Refer to GI-16.
7	System branch	• This shows that the system branches to another system identified by cell code (section and system).
8	Optional splice	• The open circle shows that the splice is optional depending on vehicle application.
9	Splice	• The shaded circle shows that the splice is always on the vehicle.
10	Page crossing	• This arrow shows that the circuit continues to an adjacent page • The A will match with the A on the preceding or next page.
11	Option abbreviation	• This shows that the circuit is optional depending on vehicle application.
12	Switch	• This shows that continuity exists between terminals 1 and 2 when the switch is in the A position. Continuity exists between terminals 1 and 3 when the switch is in the B position.
13	Page Crossing	• This arrow shows that the circuit continues to another page identified by cell code. • The C will match with the C on another page within the system other than the next or preceding pages.
14	Relay	• This shows an internal representation of the relay. See "STANDARDIZED RELAY" in EL section for details.
15	Connectors	• This shows that the connector is connected to the body or a terminal with bolt or nut.
16	Component name	• This shows the name of a component.
17	Component box in wave line	• This shows that another part of the component is also shown on another page (indicated by wave line) within the system
18	Assembly parts	• Connector terminal in component shows that it is a harness incorporated assembly.
19	Connector number	• This shows the connector number. • The letter shows which harness the connector is located. Example: M: main harness. See "HARNESS LAYOUT" in EL section to locate the connector. A coordinate grid is included for complex harnesses to aid in locating connectors.

FOREWORD

This manual contains maintenance and repair procedures for the Nissan model S14 series.

In order to assure your safety and the efficient functioning of the vehicle, this manual should be read thoroughly. It is especially important that the PRECAUTIONS in the GI section be completely understood before starting any repair task.

All information in this manual is based on the latest product information at the time of publication. The right is reserved to make changes in specifications and methods at any time without notice.

IMPORTANT SAFETY NOTICE

The proper performance of service is essential for both the safety of the technician and the efficient functioning of the vehicle.
The service methods in this Service Manual are described in such a manner that the service may be performed safely and accurately.
Service varies with the procedures used, the skills of the technician and the tools and parts available. Accordingly, anyone using service procedures, tools or parts which are not specifically recommended by NISSAN must first completely satisfy himself that neither his safety nor the vehicle's safety will be jeopardized by the service method selected.

NISSAN MOTOR CO., LTD.
Overseas Service Department
Tokyo, Japan

SECTION GI

CONTENTS

PRECAUTIONS 2
Precautions for Supplemental Restraint System "AIR BAG" and "SEAT BELT PRE-TENSIONER" 2
General Precautions 2
Precautions for Multiport Fuel Injection System or ECCS Engine 4
Precautions for Three Way Catalyst 4
Precautions for Turbocharger 4
Engine Oils 5
Precautions for Fuel 6
HOW TO USE THIS MANUAL 7
HOW TO READ WIRING DIAGRAMS 9
Sample/Wiring Diagram — EXAMPL — 9
Description 11
Wiring Diagram Codes (Cell Codes) 17
HOW TO PERFORM EFFICIENT DIAGNOSIS FOR AN ELECTRICAL INCIDENT 18
Work Flow 18
Incident Simulation Tests 19
Circuit Inspection 23
HOW TO FOLLOW FLOW CHART IN TROUBLE DIAGNOSES 29
CONSULT CHECKING SYSTEM 32
Function and System Application 32
Lithium Battery Replacement 32
Checking Equipment 32
IDENTIFICATION INFORMATION 33
Model Variation 33
Identification Number 34
Dimensions 37
Wheels and Tires 37
LIFTING POINTS AND TOW TRUCK TOWING 38
Garage Jack and Safety Stand 38
2-pole Lift 39
Preparation 39
Board-on Lift 39
Tow Truck Towing 40
TIGHTENING TORQUE OF STANDARD BOLTS 41
SAE J1930 TERMINOLOGY LIST 42
SAE J1930 Terminology List 42

Description (Cont'd)

Number	Item	Description
20	Wire color	• This shows a code for the color of the wire. B = Black BR = Brown W = White OR = Orange R = Red P = Pink G = Green PU = Purple L = Blue GY = Gray Y = Yellow SB = Sky Blue LG = Light Green CH = Dark Brown DG = Dark Green When the wire color is striped, the base color is given first, followed by the stripe color as shown below: Example: L/W = Blue with White Stripe
21	Common component	• Connectors enclosed in broken line show that those belong to the same component.
22	Common connector	• The dotted lines between terminals show that these terminals are part of the same connector.
23	Current flow arrow	• Arrow indicates electric current flow, especially where the direction of standard flow (vertically downward or horizontally from left to right) is difficult to follow. • A double arrow "◄ ►" shows that current can flow in either direction depending on circuit operation.
24	Option description	• This shows a description of the option abbreviation used on the page.
25	Ground	• This shows the ground connection.
26	Connector views	• This area shows the connector faces of the components in the wiring diagram on the page.
27	Fusible link and fuse box	• This shows the arrangement of fusible link(s) and fuse(s), used for connector views of POWER SUPPLY ROUTING in "EL" section. The open square shows current flow in, and the shaded square shows current flow out. Same meanings as the open and shaded circles in Number 2 and 4 above.
28	Reference	• This shows that more information on the Super Multiple Junction (SMJ) and joint connectors exists. See Foldout Page in EL section for details.
29	Shielded line	• The line enclosed by broken line circle shows shield wire.
30	Connector color	• This shows the code for the color of the connector. For code meaning, refer to wire color codes above (20).
31	Cell code	• This identifies each page of the wiring diagram by section, system and wiring diagram page number.
32	Ground	• The line spliced and grounded under wire color shows that ground line is spliced at the grounded connector.

Description (Cont'd)

CONNECTOR SYMBOLS

Most of connector symbols in wiring diagrams are shown from the terminal side.

- Connector symbols shown from the terminal side are enclosed by a single line.
- Connector symbols shown from the harness side are enclosed by a double line and followed by the direction mark

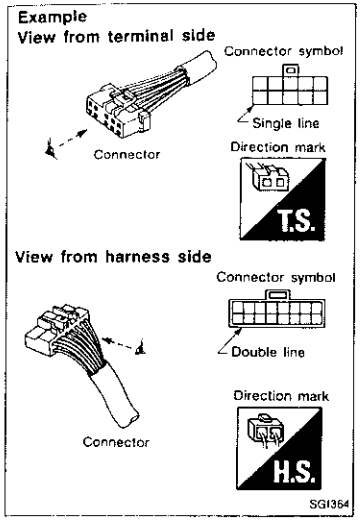

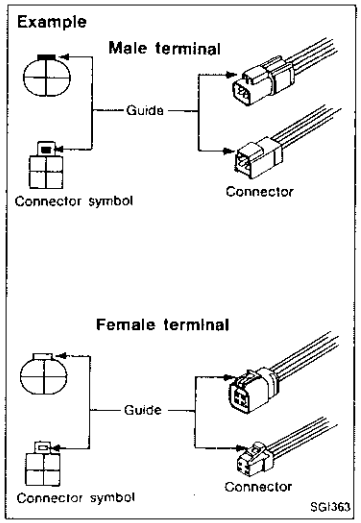

- Male and female terminals
  Connector guides for male terminals are shown in black and female terminals in white in wiring diagrams.

Description (Cont'd)

SWITCH POSITIONS

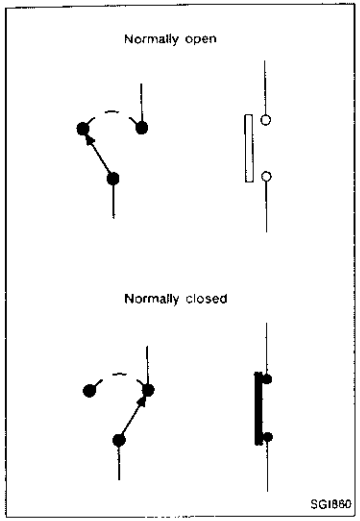

Switches are shown in wiring diagrams as if the vehicle is in the "normal" condition.

A vehicle is in the "normal" condition when:

- ignition switch is "OFF",
- doors, hood and trunk lid/back door are closed,
- pedals are not depressed, and
- parking brake is released.

DETECTABLE LINES AND NON-DETECTABLE LINES

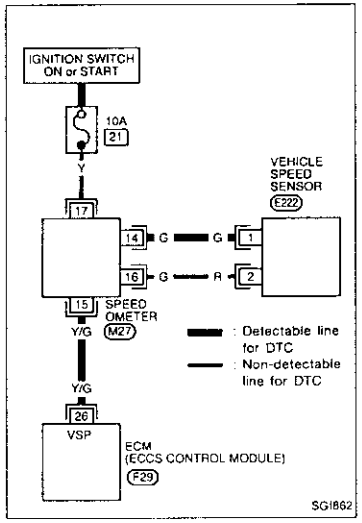

In some wiring diagrams, two kinds of lines, representing wires, with different weight are used.

- A line with regular weight (wider line) represents a "detectable line for DTC (Diagnostic Trouble Code)". A "detectable line for DTC" is a circuit in which ECM (ECCS control module) can detect its malfunctions with the on-board diagnostic system.
- A line with less weight (thinner line) represents a "non-detectable line for DTC". A "non-detectable line for DTC" is a circuit in which ECM cannot detect its malfunctions with the on-board diagnostic system.

Description (Cont'd)

MULTIPLE SWITCH

The continuity of multiple switch is described in two ways as shown below.

- The switch chart is used in schematic diagrams.
- The switch diagram is used in wiring diagrams.

Example

(SWITCH CHART)

WIPER SWITCH

	OFF	INT	LO	HI	WASH
1					○
2				○	
3	○	○	○		
4	○	○			
5		○			
6		○	○	○	○

(SWITCH DIAGRAM)

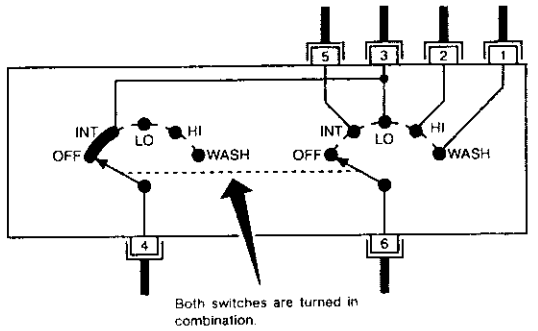

Continuity circuit of wiper switch

SWITCH POSITION	CONTINUITY CIRCUIT
OFF	3 - 4
INT	3 - 4, 5 - 6
LO	3 - 6
HI	2 - 6
WASH	1 - 6

SGI875

Description (Cont'd)

FOLDOUT PAGE

The foldout should be spread to read the entire wiring diagram.

Super multiple junction (SMJ)

In wiring diagram, connectors consisting of terminals having terminal numbers with an alphabet (B1, D0, etc.) are SMJ connectors.

If connector numbers are shown in Reference Area, these connector symbols are not shown in Connector Area. For terminal arrangement of these connectors, refer to the fold-out page at the end of this manual.

Joint connector

Joint connector symbols are shown in Connector Area in the wiring diagram concerned. Fold-out page also carries inside wiring layout together with such joint connector symbols.

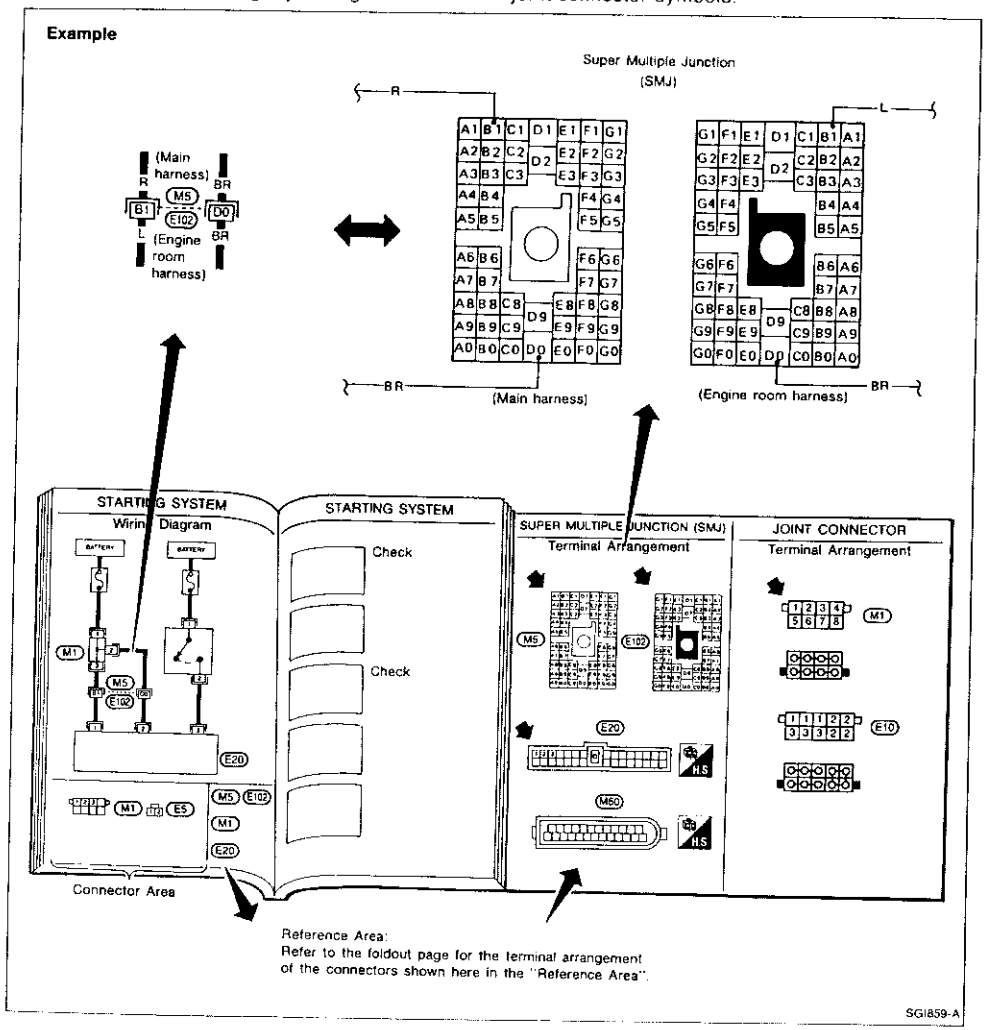

Wiring Diagram Codes (Cell Codes)

Use the chart below to find out what each wiring diagram code stands for.

Code	Section	Wiring Diagram Name
AAC/V	EC	IACV-AAC Valve
ABS	BR	Anti-lock Brake System
A/C, A	HA	Auto Air Conditioner
A/C, M	HA	Manual Air Conditioner
A/T	AT	Automatic Transmission
AIM	EL	Headlamp System
AT/C	EC	A/T Control
AUDIO	EL	Audio
BACK/L	EL	Back-up Lamp
BOOST	EC	Boost Pressure Sensor
CHARGE	EL	Charging System
CHIME	EL	Warning Chime
CMPS	EC	Camshaft Position Sensor
COOL/F	EC	Cooling Fan Control
DEF	EL	Rear Window Defogger
DEF/S	EC	Rear Window Defogger Signal
DIFF	PD	Differential Oil Cooler
D/LOCK	EL	Power Door Lock
DTRL	EL	Headlamp - With Daytime Light System
ECTS	EC	Engine Coolant Temperature Sensor
EGRC/V	EC	EGR and canister Control Solenoid Valve
F/FOG	EL	Front Fog Lamp
FICD	EC	IACV-FICD Solenoid Valve
F/PUMP	EC	Fuel Pump
H/LAMP	EL	Headlamp—Without Daytime Light System
H/SEAT	EL	Heated Seat
HEAT	HA	Heater
HLC	EL	Headlamp Washer
HO2S	EC	Heated Oxygen Sensor
HORN	EL	Horn, Cigarette Lighter, Clock
IGN/SG	EC	Ignition Signal
ILL	EL	Illumination
INJECT	EC	Injector
INT/L	EL	Interior, Spot and Trunk Room Lamps
KS	EC	Knock Sensor

Code	Section	Wiring Diagram Name
MAFS	EC	Mass Air Flow Sensor
MAIN	EC	Main Power Supply and Ground Circuit
METER	EL	Speedometer, Tachometer, Temp and Fuel Gauges
MIL	EC	MIL, Data Link Connector For Consult
MIRROR	EL	Door Mirror
MULTI	EL	Multi-remote Control System
P/ANT	EL	Power Antenna
PNP/SW	EC	Park/Neutral Position Switch
POWER	EL	Power Supply Routing
PST/SW	EC	Power Steering Oil Pressure Switch
R/FOG	EL	Rear Fog Lamp
SROOF	EL	Sun Roof
SRS	RS	Supplemental Restraint System
S/SIG	EC	Start Signal
START	EL	Starting System
STOP/L	EL	Stop Lamp
TAIL/L	EL	Clearance, License, and Tail Lamps
THEFT	EL	Theft Warning System
TPS	EC	Throttle Position Sensor
TURN	EL	Turn Signal and Hazard Warning Lamps
VSS	EC	Vehicle Speed Sensor
VTC	EC	VTC Solenoid Valve
WARN	EL	Warning Lamps
WG/V	EC	Wastegate Valve Control Solenoid Valve
WINDOW	EL	Power Window
WIPER	EL	Front Wiper and Washer
WIP/R	EL	Rear Wiper and Washer

Work Flow

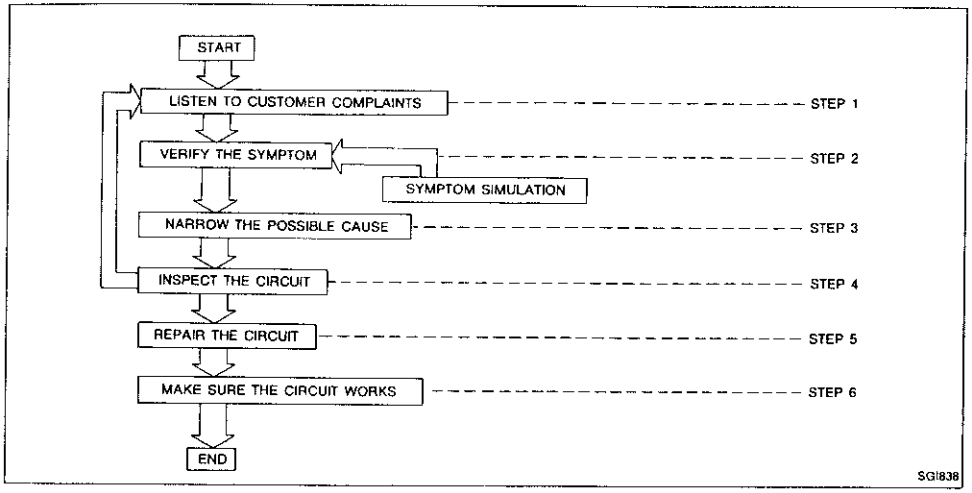

STEP	DESCRIPTION
STEP 1	Get detailed information about the conditions and the environment when the incident occurred. The following are key pieces of information required to make a good analysis: **WHAT** Vehicle Model, Engine, Transmission and the System (i.e. Radio). **WHEN** Date, Time of Day, Weather Conditions, Frequency. **WHERE** Road Conditions, Altitude and Traffic Situation. **HOW** System Symptoms, Operating Conditions (Other Components Interaction). Service History and if any After Market Accessories have been installed.
STEP 2	Operate the system, road test if necessary. Verify the parameter of the incident. If the problem can not be duplicated, refer to "Incident Simulation Tests" next page.
STEP 3	Get the proper diagnosis materials together including: POWER SUPPLY ROUTING System Operation Descriptions Applicable Service Manual Sections Identify where to begin diagnosis based upon your knowledge of the system operation and the customer comments.
STEP 4	Inspect the system for mechanical binding, loose connectors or wiring damage. Determine which circuits and components are involved and diagnose using the Power Supply Routing and Harness Layouts.
STEP 5	Repair or replace the incident circuit or component.
STEP 6	Operate the system in all modes. Verify the system works properly under all conditions. Make sure you have not inadvertently created a new incident during your diagnosis or repair steps.

Incident Simulation Tests

INTRODUCTION

Sometimes the symptom is not present when the vehicle is brought in for service. Therefore, it is necessary to simulate the conditions and environment when the incident occurred. Otherwise, only a No Trouble Found Diagnosis may be found. The following section illustrates ways to simulate the conditions/environment under which the owner experiences an electrical incident.

The section is broken into the six following topics:

1. Vehicle vibration
2. Heat sensitive
3. Freezing
4. Water intrusion
5. Electrical load
6. Cold or hot start up

Get a thorough description of the incident from the customer. It is important for simulating the conditions of the problem.

VEHICLE VIBRATION

The problem may occur or become worse while driving on a rough road or when engine is vibrating (idle with A/C on). In such a case, you will want to check for a vibration related condition. Refer to the illustration below.

Connectors & harness

Determine which connectors and wiring harness would affect the electrical system you are inspecting. **Gently** shake each connector and harness while monitoring the system for the incident you are trying to duplicate. This test may indicate a loose or poor electrical connection.

Hint

Connectors can be exposed to moisture. It is possible to get a thin film of corrosion on the connector terminals. A visual inspection may not reveal this without disconnecting the connector. If the problem occurs intermittently, perhaps the problem is caused by corrosion. It is a good idea to disconnect, inspect and clean the terminals on related connectors in the system.

Sensors & relays

Gently apply a slight vibration to sensors and relays in the system you are inspecting.
This test may indicate a loose or poorly mounted sensor or relay.

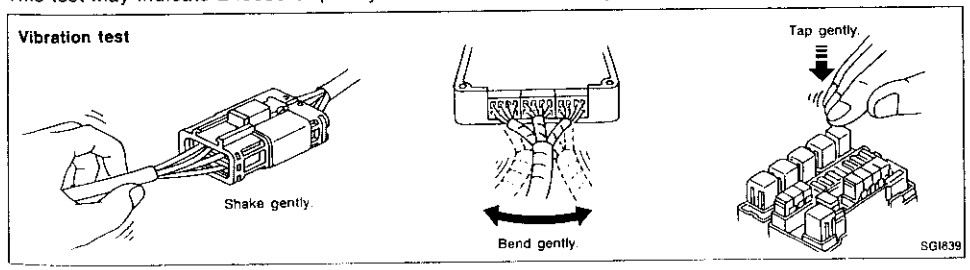

Incident Simulation Tests (Cont'd)

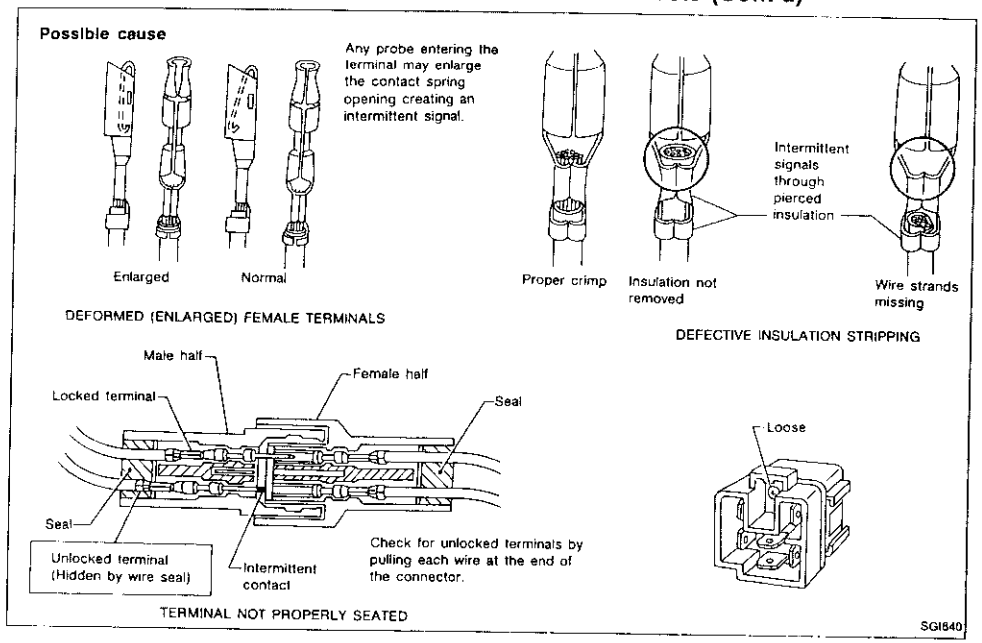

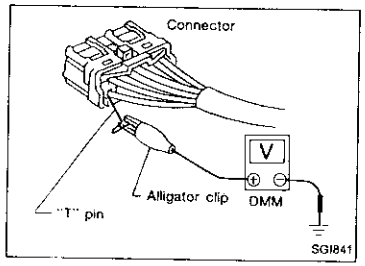

Tester probe

When probing a connector it is possible to enlarge the contact spring opening. If this occurs it may create an intermittent signal in the circuit. When probing a connector, use care not to enlarge the opening. The probe of the Digital Multimeter (DMM) may not fit into the connector cavity. In such cases make an extension of a "T" pin and probe it from the harness side of the connector. Most DMMs have accessory alligator clips. Slide these over the probe to allow clipping the "T" pin for a better contact. If you have any difficulty probing a terminal, inspect the terminal. Ensure you have not accidentally opened the contact spring or pulled a wire loose.

Incident Simulation Tests (Cont'd)

Engine compartment

There are several reasons a vehicle or engine vibration could cause an electrical complaint. Some of the things to check for are:

- Connectors which are inaccessible for diagnosis probing.
- Connectors which may not fully be seated.
- Wiring harness which are not long enough and are being stressed during engine vibrations or rocking.
- Wires laying across brackets or moving components.
- Loose, dirty or corroded ground wires.
- Wires routed too close to hot components.

To inspect components under the hood, start by verifying the integrity of ground connections. (Refer to GROUND INSPECTION described later.) First check that the system is properly grounded. Then check for loose connection by **gently shaking** the wiring or components as previously explained. Using the wiring diagrams inspect the wiring for continuity.

Behind the instrument panel

Improperly routed or improperly clamped harness can become pinched during accessory installation. Vehicle vibration can aggravate a harness which is routed along a bracket or near a screw behind or below the dash.

Under seating areas

An unclamped or loose harness can cause wiring to be pinched by seat components (such as slide guides) during vehicle vibration. If the wiring runs under seating areas inspect wire routing for possible damage or pinching.

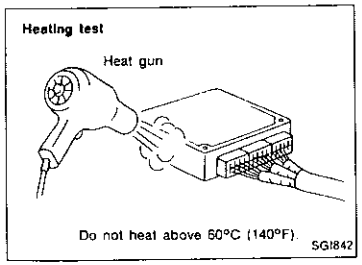

HEAT SENSITIVE

The owner's problem may occur during hot weather or after car has sat for a short time. In such cases you will want to check for a heat sensitive condition.
To determine if an electrical component is heat sensitive, heat the component with a heat gun or equivalent.
Do not heat components above 60°C (140°F). If incident occurs while heating the unit, either replace or properly insulate the component.

MAINTENANCE

SECTION **MA**

CONTENTS

PRECAUTIONS AND PREPARATION 2
Supplemental Restraint System (SRS) "AIR BAG" and "SEAT BELT PRE-TENSIONER" 2
Special Service Tools 2
Commercial Service Tool 2
PRE-DELIVERY INSPECTION ITEMS 3
GENERAL MAINTENANCE 4
PERIODIC MAINTENANCE (Except for Europe) 5
PERIODIC MAINTENANCE (For Europe) 7
RECOMMENDED FLUIDS AND LUBRICANTS 10
Fluids and Lubricants 10
SAE Viscosity Number 11
ENGINE MAINTENANCE 12
Checking Drive Belts 12
Changing Engine Coolant 12
Checking Cooling System 13
Checking Fuel Lines 14
Changing Fuel Filter 14
Changing Air Cleaner Filter 15
Changing Engine Oil 15
Changing Oil Filter 16
Changing Spark Plugs 16
Checking Positive Crankcase Ventilation (PCV) System 17
Checking Vacuum Hoses and Connections 17
Checking Vapor Lines 17
Checking Heated Oxygen Sensor (HO2S) 18
CHASSIS AND BODY MAINTENANCE 19
Checking Exhaust System 19
Checking Clutch Fluid Level and Leaks 19
Checking Clutch System 19
Checking M/T Oil 19
Changing M/T Oil 19
Checking A/T Fluid 20
Changing A/T Fluid 20
Checking Propeller Shaft 20
Checking Differential Gear Oil 21
Changing Differential Gear Oil 21
Balancing Wheels 21
Tire Rotation 21
Checking Brake Fluid Level and Leaks 21
Checking Brake Lines and Cables 21
Changing Brake Fluid 22
Checking Brake Booster, Vacuum Hoses, Connections and Check Valve 22
Checking Disc Brake 22
Checking Steering Gear and Linkage 23
Checking Power Steering Fluid and Lines 23
Lubricating Locks, Hinges and Hood Latches 24
Checking Seat Belts, Buckles, Retractors, Anchors and Adjusters 24
SERVICE DATA AND SPECIFICATIONS (SDS) 25
Engine Maintenance 25
Chassis and Body Maintenance 25

Supplemental Restraint System (SRS) "AIR BAG" and "SEAT BELT PRE-TENSIONER"

The Supplemental Restraint System "Air Bag" and "Seat belt pre-tensioner", used along with a seat belt, help to reduce the risk or severity of injury to the driver and front passenger in a frontal collision. The Supplemental Restraint System consists of air bag modules (located in the center of the steering wheel and on the instrument panel on the passenger side), seat belt pre-tensioner, a diagnosis sensor unit, warning lamp, wiring harness and spiral cable. Information necessary to service the system safely is included in the **RS** section of this Service Manual.

WARNING:

- **To avoid rendering the SRS inoperative, which could increase the risk of personal injury or death in the event of a collision which would result in air bag inflation, all maintenance must be performed by an authorized NISSAN dealer.**
- **Improper maintenance, including incorrect removal and installation of the SRS, can lead to personal injury caused by unintentional activation of the system.**
- **All SRS electrical wiring harnesses and connectors are covered with yellow outer insulation. Do not use electrical test equipment on any circuit related to the SRS.**

Special Service Tools

Tool number Tool name	Description
EG17650301 Radiator cap tester adapter	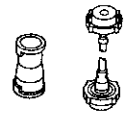 NT053
KV10115800 Oil filter wrench 65 mm (2.56 in) dia.	 NT006

Commercial Service Tool

Tool name	Description
Spark plug wrench	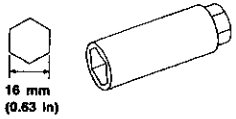 NT047 Wrench with a magnet to hold spark plug

Shown below are Pre-delivery Inspection Items required for the new vehicle. It is recommended that necessary items other than those listed here be added, paying due regard to the conditions in each country.

Perform applicable items on each model. Consult text of this section for specifications.

UNDER HOOD — engine off

- ☐ Radiator coolant level and coolant hose connections for leaks
- ☐ Battery fluid level, specific gravity and conditions of battery terminals
- ☐ Drive belts tension
- ☐ Fuel filter for water or dusts, and fuel lines and connections for leaks
- ☐ Engine oil level and oil leaks
- ☐ Clutch and brake reservoir fluid level and fluid lines for leaks
- ☒ Windshield and rear window washer and headlamp cleaner reservoir fluid level
- ☐ Power steering reservoir fluid level and hose connections for leaks

ON INSIDE AND OUTSIDE

- ☐ Remove front spring/strut spacer (If applicable)
- ☐ Operation of all instruments, gauges, lights and accessories
- ☐ Operation of horn(s), wiper and washer
- ☐ Steering lock for operation
- ☐ Check air conditioner for gas leaks
- ☐ Front and rear seats, and seat belts for operation
- ☐ All moldings, trims and fittings for fit and alignment
- ☐ All windows for operation and alignment
- ☐ Hood, trunk lid, door panels for fit and alignment
- ☐ Latches, keys and locks for operation
- ☐ Weatherstrips for adhesion and fit
- ☐ Headlamp aiming
- ☐ Tighten wheel nuts (Inc. inner nuts if applicable)
- ☐ Tire pressure (Inc. spare tire)
- ☐ Check front wheels for toe-in
- ☐ Install clock/voltmeter/room lamp fuse (If applicable)
- ☒ Install deodorizing filter to air purifier (If applicable)
- ☒ Remove wiper blade protectors (If applicable)

UNDER BODY

- ☐ Manual transmission/transaxle and differential gear oil level
- ☐ Brake and fuel lines and oil/fluid reservoirs for leaks
- ☐ Tighten bolts and nuts of steering linkage and gear box, suspension, propeller shafts and drive shafts
- ☒ Tighten rear body bolts and nuts (Models with wooden bed only)

ROAD TEST

- ☐ Clutch operation
- ☐ Parking brake operation
- ☐ Service brake operation
- ☐ Automatic transmission/transaxle shift timing and kickdown
- ☐ Steering control and returnability
- ☐ Engine performance
- ☐ Squeaks and rattles

ENGINE OPERATING AND HOT

- ☐ Adjust idle mixture and speed (and ignition timing*1)
- ☐ Automatic transmission/transaxle fluid level
- ☒ Engine idling and stop knob operation (Diesel only)

FINAL INSPECTION

- ☐ Install necessary parts (outside mirror, wheel covers, seat belts, mat, carpet or mud flaps)
- ☐ Inspect for interior and exterior metal and paint damage
- ☐ Check for spare tire, jack, tools (wheel chock), and literature
- ☐ Wash, clean interior and exterior

*1: Not required on models with a direct ignition system

☒: Not applicable on this model

GENERAL MAINTENANCE

General maintenance includes those items which should be checked during the normal day-to-day operation of the vehicle. They are essential if the vehicle is to continue operating properly. The owners can perform the checks and inspections themselves or they can have their NISSAN dealers do them for a nominal charge.

Item	Reference pages
OUTSIDE THE VEHICLE The maintenance items listed here should be performed from time to time, unless otherwise specified.	
Tires Check the pressure with a gauge periodically when at a service station, including the spare, and adjust to the specified pressure if necessary. Check carefully for damage, cuts or excessive wear.	—
Windshield wiper blades Check for cracks or wear if they do not wipe properly.	—
Doors and engine hood Check that all doors, the engine hood, the trunk lid and back door operate properly. Also ensure that all latches lock securely. Lubricate if necessary. Make sure that the secondary latch keeps the hood from opening when the primary latch is released. When driving in areas using road salt or other corrosive materials, check for lubrication frequently.	MA-24
Tire rotation Tires should be rotated every 10,000 km (6,000 miles).	MA-21
INSIDE THE VEHICLE The maintenance items listed here should be checked on a regular basis, such as when performing periodic maintenance, cleaning the vehicle etc.	
Lights Make sure that the headlights, stop lights, tail lights, turn signal lights, and other lights are all operating properly and installed securely. Also check headlight aim.	—
Warning lights and chimes Make sure that all warning lights and chimes are operating properly.	—
Steering wheel Check for change in the steering conditions, such as excessive free play, hard steering or strange noises. **Free play: Less than 35 mm (1.38 in)**	—
Seat belts Check that all parts of the seat belt system (e.g. buckles, anchors, adjusters and retractors) operate properly and smoothly, and are installed securely. Check the belt webbing for cuts, fraying, wear or damage.	MA-24
UNDER THE HOOD AND VEHICLE The maintenance items listed here should be checked periodically e.g. each time you check the engine oil or refuel.	
Windshield washer fluid Check that there is adequate fluid in the tank.	—
Engine coolant level Check the coolant level when the engine is cold.	MA-12
Engine oil level Check the level after parking the vehicle on a level spot and turning off the engine.	MA-15
Brake and clutch fluid level Make sure that the brake and clutch fluid level is between the "MAX" and "MIN" lines on the reservoir.	MA-19, 21
Battery Check the fluid level in each cell. It should be between the "MAX" and "MIN" lines.	—

PERIODIC MAINTENANCE (Except for Europe)

The following tables show the normal maintenance schedule. Depending upon weather and atmospheric conditions, varying road surfaces, individual driving habits and vehicle usage, additional or more frequent maintenance may be required.

Periodic maintenance beyond the last period shown on the tables requires similar maintenance.

MAINTENANCE OPERATION Perform either at number of kilometers (miles) or months, whichever comes first	MAINTENANCE INTERVAL									Reference page
	km x 1,000	1	10	20	30	40	50	60	70	80	
	(Miles x 1,000)	(0.6)	(6)	(12)	(18)	(24)	(30)	(36)	(42)	(48)	
	Months	—	6	12	18	24	30	36	42	48	
ENGINE AND EMISSION CONTROL	**Underhood and under vehicle**										
Check drive belts for cracks, fraying, wear & tension						X				X	MA-12
Change engine anti-freeze coolant (Ethylene glycol base) (LLC)						X				X	MA-12
Check cooling system				X		X		X		X	MA-13
Check fuel lines						X				X	MA-14
Replace air cleaner filter (Viscous paper type)★						X				X	MA-15
Change engine oil (Use API SE, SF, SG or SH oil)★		Every 5,000 km (3,000 miles) or 6 months									MA-15
Change engine oil filter★ (Use Part No. 15208-65F00)		X	X	X	X	X	X	X	X	X	MA-16
Replace fuel filter★						X				X	MA-15
Replace spark plugs (Use PLATINUM-TIPPED type)		Every 100,000 km (60,000 miles)									MA-16
Check vapor lines and heated oxygen sensor						X				X	MA-17, 18
CHASSIS AND BODY	**Underhood**										
Check brake, clutch & automatic transmission fluid level & leaks★		X	X	X	X	X	X	X	X	X	MA-19, 20, 21
Change brake fluid★						X				X	MA-22
Check brake booster vacuum hoses, connections & check valve						X				X	MA-22
Check power steering fluid & lines		X	X	X	X	X	X	X	X	X	MA-23
	Under vehicle										
Check brake, clutch & exhaust systems for proper attachment, leaks, cracks, chafing, abrasion, deterioration, etc.		X	X	X	X	X	X	X	X	X	MA-19, 21
Check oil level in manual transmission & differential gear★		X	X	X	X	X	X	X	X	X	MA-19, 21
Check steering gear & linkage, axle & suspension parts & propeller shaft & drive shaft for damaged, loose & missing parts & lubrication★		X		X		X		X		X	MA-20, 23 FA-5, RA-5, 7
	Outside and inside										
Check wheel alignment. If necessary, rotate & balance wheels				X		X		X		X	MA-21 FA-6
Check brake pads, discs & other brake components for wear, deterioration & leaks★		X	X	X	X	X	X	X	X	X	MA-22
Lubricate locks, hinges & hood latch★		X	X	X	X	X	X	X	X	X	MA-24
Check seat belts, buckles, retractors, anchors & adjuster			X		X		X		X		MA-24
Check foot brake, parking brake & clutch for free play, stroke & operation		X	X	X	X	X	X	X	X	X	CL-4, BR-7, 23
Air bag system		See NOTE (1).									RS-5

NOTE: (1) Inspect at the first 10 years and then every 2 years.
(2) Maintenance items with "★" should be performed more frequently according to "Maintenance under severe driving conditions".

Check: Check. Correct or replace if necessary.

MAINTENANCE UNDER SEVERE DRIVING CONDITIONS

The maintenance intervals shown on the preceding pages are for normal operating conditions. If the vehicle is mainly operated under severe driving conditions as shown below, more frequent maintenance must be performed on the following items as shown in the table.

Severe driving conditions

A — Driving under dusty conditions
B — Driving repeatedly short distances
C — Towing a trailer
D — Extensive idling
E — Driving in extremely adverse weather conditions or in areas where ambient temperatures are either extremely low or extremely high
F — Driving in high humidity areas or in mountainous areas
G — Driving in areas using salt or other corrosive materials
H — Driving on rough and/or muddy roads or in the desert
I — Driving with frequent use of braking or in mountainous areas

Driving condition	Maintenance item	Maintenance operation	Maintenance interval	Reference page
A	Air cleaner filter	Replace	More frequently	MA-15
A B C D	Engine oil	Replace		MA-15
A B C D	Engine oil filter	Replace	Every 5,000 km (3,000 miles) or 3 months	MA-16
A E	Fuel filter	Replace	Every 20,000 km (12,000 miles) or 12 months	MA-16
F	Brake fluid	Replace		MA-21
C H	Automatic & manual transmission oil & differential gear oil	Replace	Every 40,000 km (24,000 miles) or 24 months	MA-19, 20, 21
G H	Steering gear & linkage, axle & suspension parts & propeller shaft & drive shafts	Check	Every 10,000 km (6,000 miles) or 6 months	MA-20, 23 FA-5, RA-5, 7
A C G H I	Brake pads, discs & other brake components	Check	Every 5,000 km (3,000 miles) or 3 months	MA-22
G	Lock, hinges & hood latch	Lubricate		MA-24

Maintenance operation: Check = Check. Correct or replace if necessary.

The following tables show the normal maintenance schedule. Depending upon weather and atmospheric conditions, varying road surfaces, individual driving habits and vehicle usage, additional or more frequent maintenance may be required.

Periodic maintenance beyond the last period shown on the tables requires similar maintenance.

ENGINE OIL SERVICE

Abbreviations: R = Replace.

MAINTENANCE OPERATION		MAINTENANCE INTERVAL								
Perform on kilometer basis or on month basis if not driven 10,000 km (6,000 miles) within a year.	km x 1,000	10	20	30	40	50	60	70	80	Reference page
	(Miles x 1,000)	(6)	(12)	(18)	(24)	(30)	(36)	(42)	(48)	
	Months	12	24	36	48	60	72	84	96	
[Engine oil service]	**Engine compartment and under vehicle**									
Engine oil (Use API SG or SH oil only)★		R	R	R	R	R	R	R	R	MA-15
Engine oil filter (Use Part No. 15208-65F00)★		R	R	R	R	R	R	R	R	MA-16

NOTE: (1) Maintenance items with "★" should be performed more frequently according to "Maintenance under severe driving conditions".

MAJOR SERVICE (Engine)

Abbreviations: R = Replace. I = Inspect. Correct or replace if necessary. [ ]: At the specified mileage only

MAINTENANCE OPERATION		MAINTENANCE INTERVAL				
Perform on month basis or on kilometer basis if driven 30,000 km (18,000 miles) within a year.	**Months**	**12**	**24**	**36**	**48**	Reference page
	km x 1,000	30	60	90	120	
	(Miles x 1,000)	(18)	(36)	(54)	(72)	
Underhood and under vehicle						
Drive belts	See NOTE (1).		I	I	I	MA-12
Engine anti-freeze coolant (Ethylene glycol base)	See NOTE (2).					MA-12
Cooling system		I	I	I	I	MA-13
Fuel lines			I		I	MA-14
Air cleaner filter (Viscous paper type)★			R		R	MA-15
Fuel filter★				R		MA-15
Spark plug (Use PLATINUM-TIPPED type)				[R]		MA-16
Heated oxygen sensor (Except for Sweden)			I		I	MA-18
Vapor lines	See NOTE (3).		I		I	MA-17

NOTE: (1) After 24 months or 60,000 km (36,000 miles), check every 12 months or 30,000 km (18,000 miles).
(2) Change at 60 months or 90,000 km (54,000 miles), then every 24 months or 60,000 km (36,000 miles).
(3) For Sweden perform at the first 90,000 km (54,000 miles), and then every 60,000 km (36,000 miles) or 24 months, whichever comes first.
(4) Maintenance items with "★" should be performed more frequently according to "Maintenance under severe driving conditions".

MAJOR SERVICE (Chassis and Body)

Abbreviations: R = Replace. I = Inspect. Correct or replace if necessary.

MAINTENANCE OPERATION		MAINTENANCE INTERVAL				
Perform on month basis or on kilometer basis if driven 30,000 km (18,000 miles) within a year.	Months	12	24	36	48	Reference page
	km x 1,000	30	60	90	120	
	(Miles x 1,000)	(18)	(36)	(54)	(72)	
Underhood and under vehicle						
Brake & clutch oil level & leak★		I	I	I	I	MA-19, 21
Automatic transmission fluid (level & leakage)★		I	I	I	I	MA-20
Brake fluid★			R		R	MA-22
Brake booster vacuum hoses, connections & check valve			I		I	MA-22
Power steering fluid & lines		I	I	I	I	MA-23
Brake & clutch system		I	I	I	I	MA-19, 21
Manual transmission & standard differential gear oil (For leakage)★		I	I	I	I	MA-19, 21
Steering gear & linkage, axle & suspension parts, propeller shaft & drive shaft, exhaust system★			I		I	MA-20, 23 RA-5, 7, FA-5
Outside and inside						
Wheel alignment (if necessary, rotate & balance wheels)		I	I	I	I	MA-21 FA-6
Brake pads, discs & other brake components★		I	I	I	I	MA-22
Headlamp aiming		I	I	I	I	EL-64
Seat belts, buckles, retractors & adjuster		I	I	I	I	MA-24
Foot brake, parking brake & clutch (For free play, stroke & operation)		I	I	I	I	CL-4 BR-7, 23
Body corrosion			Annually			
Air bag system			See NOTE (1).			RS-5

NOTE: (1) Inspect at the first 10 years and then every 2 years.
(2) Maintenance items with "★" should be performed more frequently according to "Maintenance under severe driving conditions".

MAINTENANCE UNDER SEVERE DRIVING CONDITIONS

The maintenance intervals shown on the preceding pages are for normal operating conditions. If the vehicle is mainly operated under severe driving conditions as shown below, more frequent maintenance must be performed on the following items as shown in the table.

Severe driving conditions

A — Driving under dusty conditions
B — Driving repeatedly short distances
C — Towing a trailer
D — Extensive idling
E — Driving in extremely adverse weather conditions or in areas where ambient temperature are either extremely low or extremely high
F — Driving in high humidity areas or in mountainous areas
G — Driving in areas using salt or other corrosive materials
H — Driving on rough and/or muddy roads or in the desert
I — Driving with frequent use of braking or in mountainous areas

Driving condition									Maintenance item	Maintenance operation	Maintenance interval	Reference page
Engine oil service												
A	B	C	D	.	.	.	.	.	Engine oil	Replace	Every 5,000 km (3,000 miles) or 6 months	MA-15
A	B	C	D	.	.	.	.	.	Engine oil filter	Replace	Every oil change	MA-16
Major service												
A	.	.	.	.	.	.	.	.	Air cleaner filter	Replace	Every 12 months or 30,000 km (18,000 miles)	MA-15
A	.	.	.	E	.	.	.	.	Fuel filter	Replace		MA-16
.	.	.	.	.	F	.	.	.	Brake fluid	Replace		MA-21
.	.	.	.	.	.	G	H	.	Steering gear & linkage, axle & suspension parts, propeller shaft & drive shaft, exhaust system	Check		MA-20, 23 FA-5, RA-5, 7
.	.	C	.	.	.	.	H	.	Automatic & manual transmission & differential gear oil	Replace	Every 24 months or 60,000 km (36,000 miles)	MA-19, 20, 21
A	.	C	.	.	.	G	H	I	Brake pads, discs & other brake components	Check	Every 6 months or 15,000 km (9,000 miles)	MA-22

Fluids and Lubricants

	Capacity (Approximate)		Recommended fluids and lubricants
	Liter	Imp measure	
Engine oil (Refill)			
With oil filter	3.7	3-1/4 qt	API SF/CC, SF/CD, SE, SG or SH*1
Without oil filter	3.5	3-1/8 qt	
Cooling system (with reservoir tank)	6.2	5-1/2 qt	Anti-freeze coolant (Ethylene glycol base) or soft water
Manual transmission oil	2.4	4-1/4 pt	API GL-4*
Differential carrier gear oil	1.8	3-1/8 pt	API GL-5*
Automatic transmission fluid	7.9	7 qt	Genuine Nissan ATF or equivalent*2
Power steering fluid	0.9	3/4 qt	Type DEXRON™
Brake and clutch fluid	—	—	For Europe DOT3 or DOT4 (US FMVSS No. 116)*3 Except for Europe DOT3 (US FMVSS No. 116)
Multi-purpose grease	—	—	NLGI No. 2 (Lithium soap base)

*1: For further details, see "SAE Viscosity Number".
*2: For more information regarding suitable fluids, contact a Nissan dealership.
*3: Never mix different type fluids. (DOT3 and DOT4)

SAE Viscosity Number

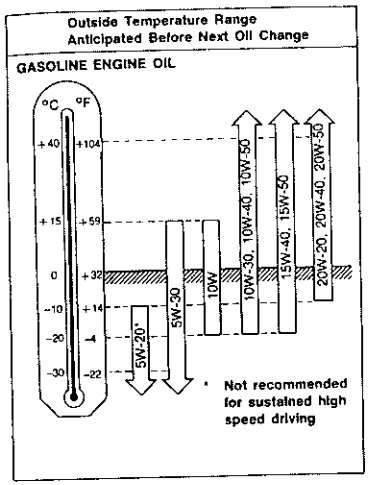

TI0005

- **5W-30 or 10W-30 is preferable regardless of driving conditions.**

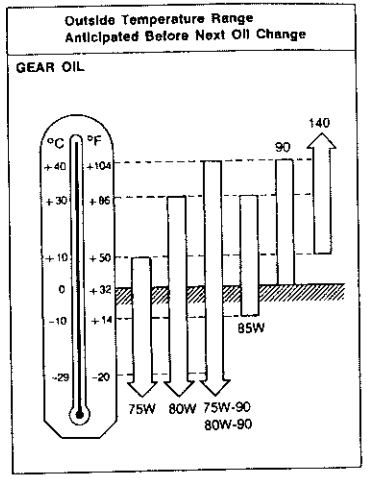

TI0003

- **For warm and cold areas: 75W-90 for transmission and 80W-90 for differential carrier are preferable.**
- **For hot areas: 90 is suitable for ambient temperatures below 40°C (104°F).**

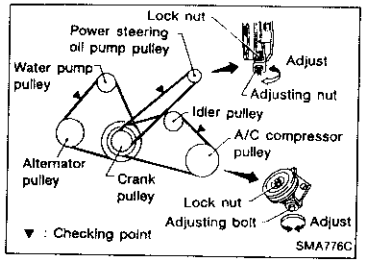

Checking Drive Belts

1. Inspect for cracks, fraying, wear or oil adhesion. If necessary, replace with a new one.
2. Inspect drive belt deflections by pushing on the belt midway between pulleys.

Adjust if belt deflections exceed the limit.

Belt deflection:

Unit: mm (in)

	Used belt deflection		Deflection of new belt
	Limit	Deflection after adjustment	
Alternator	11 (0.43)	7 - 8 (0.28 - 0.31)	4 - 5 (0.16 - 0.20)
Air conditioner compressor	7 (0.28)	5 - 6 (0.20 - 0.24)	6 - 7 (0.24 - 0.28)
Power steering oil pump	15 (0.59)	11 - 12 (0.43 - 0.47)	9 - 10 (0.35 - 0.39)
Applied pushing force	98 N (10 kg, 22 lb)		

Inspect drive belt deflections when engine is cold.

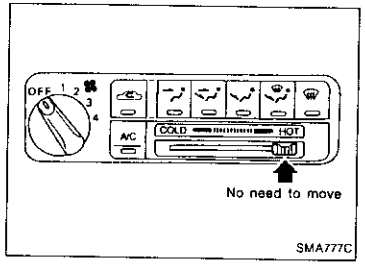

Changing Engine Coolant

WARNING:

To avoid being scalded, never change the coolant when the engine is hot.

On this model it is unnecessary to move heater "TEMP" control lever or switch before changing the coolant. This is because air mix door is in "HOT" position when ignition switch is "OFF". (This applies to both automatic and manual air conditioners.)

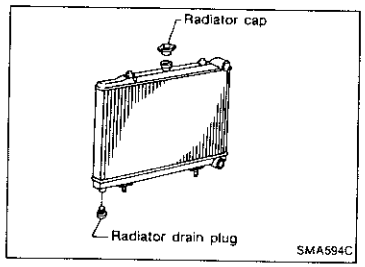

1. Remove radiator drain plug and radiator cap.
2. Remove reservoir tank, drain coolant, then clean reservoir tank.
   Install it temporarily.

- **Be careful not to allow coolant to contact drive belts.**

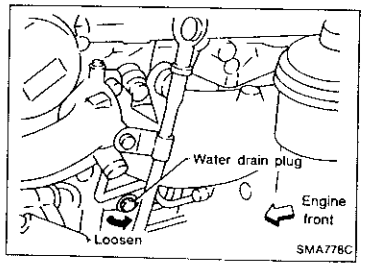

3. Remove cylinder block drain plug, air relief plug and air bleeder cap.
4. Install radiator drain plug and tighten cylinder block drain plug securely.
5. Fill radiator and reservoir tank with water.
   Air relief plug is reinstalled once coolant spills from the air relief hole during refill.
   Then fill radiator and reservoir tank with water.
   Air relief plug:
   : 10 N·m (1.0 kg-m, 7 ft-lb)
6. Reinstall radiator cap and air bleeder cap.

Changing Engine Coolant (Cont'd)

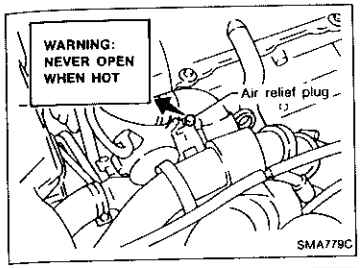

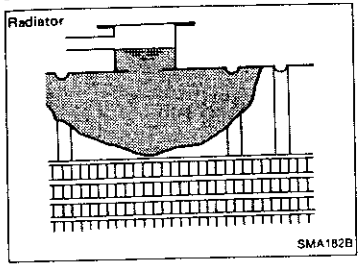

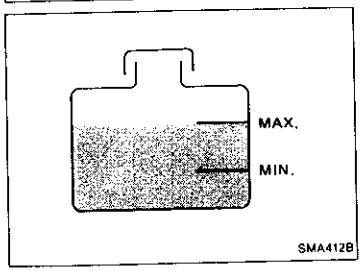

7. Warm up engine until cooling fan operates, then race engine 2 or 3 times under no-load.

- **Make sure that air conditioner switch is "OFF".**

8. Stop engine and wait until it cools down.
9. Repeat step 1 through step 8 until clear water begins to drain from radiator.
10. Drain water.

- **Apply sealant to the thread of drain plug.**
  : 8 - 12 N·m (0.8 - 1.2 kg-m, 5.8 - 8.7 ft-lb)

11. Reinstall reservoir tank.
12. Fill radiator and reservoir tank with coolant up to specified level following step 5 through step 8.
    Follow instructions attached to anti-freeze container for mixing ratio of anti-freeze to water.
    Coolant capacity (With reservoir tank):
    6.2 ℓ (5-1/2 Imp qt)

[Reservoir tank capacity for "H" level is 1.8 ℓ (1-5/8 Imp qt).]

Pour coolant through coolant filler neck slowly to allow air in system to escape.

13. If necessary, add coolant.
14. Start and warm up engine, then increase engine speed to 4,000 rpm. Check that radiator coolant level is not lowered, and that no water noise is heard in heater core. If water noise is heard, bleed air by referring to "Refilling Engine Coolant" in section LC.

Checking Cooling System

CHECKING HOSES

Check hoses for improper attachment and for leaks, cracks, damage, loose connections, chafing and deterioration.

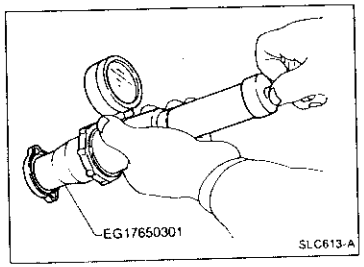

CHECKING RADIATOR CAP

Apply pressure to radiator cap with cap tester to see if it is satisfactory.

Radiator cap relief pressure:
78 - 98 kPa
(0.78 - 0.98 bar, 0.8 - 1.0 kg/cm², 11 - 14 psi)

Checking Cooling System (Cont'd)

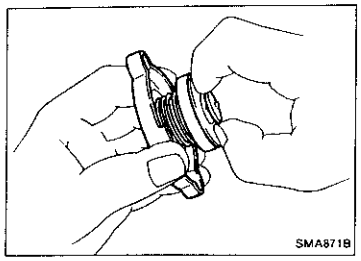

Pull the negative-pressure valve to open it. Check that it closes completely when released.

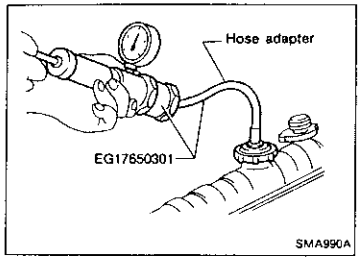

CHECKING COOLING SYSTEM FOR LEAKS

Apply pressure to the cooling system with cap tester to check for leakage.

Testing pressure:
157 kPa (1.57 bar, 1.6 kg/cm², 23 psi)

CAUTION:
Higher pressure than the specified value may cause damage to radiator.

Checking Fuel Lines

Inspect fuel lines and tank for improper attachment and for leaks, cracks, damage, loose connections, chafing and deterioration.
If necessary, repair or replace faulty parts.

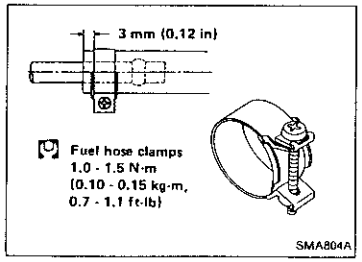

CAUTION:
Tighten high-pressure rubber hose clamp so that clamp end is 3 mm (0.12 in) from hose end.
Tightening torque specifications are the same for all rubber hose clamps.
Ensure that screw does not contact adjacent parts.

Changing Fuel Filter

WARNING:
Before removing fuel filter, release fuel pressure from fuel line to eliminate danger.

Changing Fuel Filter (Cont'd)

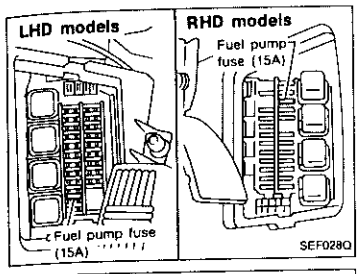

1. Remove fuse for fuel pump.
2. Start engine.
3. After engine stalls, crank engine two or three times to make sure that fuel pressure is released.
4. Turn ignition switch off and install fuse for fuel pump.

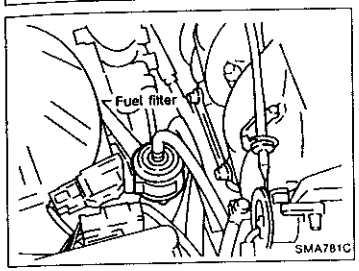

5. Loosen fuel hose clamps.
6. Replace fuel filter.

- **Be careful not to spill fuel over engine compartment. Place a shop towel to absorb fuel.**
- **Use a high-pressure type fuel filter. Do not use a synthetic resinous fuel filter.**
- **When tightening fuel hose clamps, refer to "Checking Fuel Lines".**

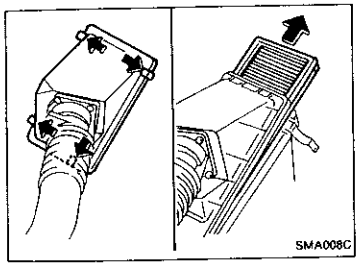

Changing Air Cleaner Filter

Viscous paper type

The viscous paper type filter does not need cleaning between renewals.

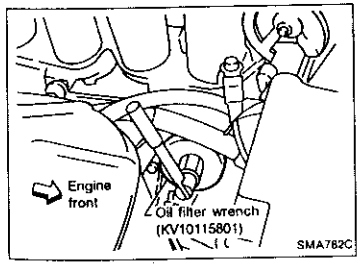

Changing Engine Oil

WARNING:

- **Be careful not to burn yourself, as the engine oil is hot.**
- **Prolonged and repeated contact with used engine oil may cause skin cancer; try to avoid direct skin contact with used oil. If skin contact is made, wash thoroughly with soap or hand cleaner as soon as possible.**

1. Warm up engine, and check for oil leakage from engine components.
2. Remove drain plug and oil filler cap.
3. Drain oil and refill with new engine oil.

Refill oil capacity (Approximate):
With oil filter change
3.7 ℓ (3-1/4 Imp qt)
Without oil filter change
3.5 ℓ (3-1/8 Imp qt)

CAUTION:

- **Be sure to clean drain plug and install with new washer.**
  Drain plug:
  : 29 - 39 N·m (3.0 - 4.0 kg-m, 22 - 29 ft-lb)
- **Use recommended engine oil.**

Changing Engine Oil (Cont'd)

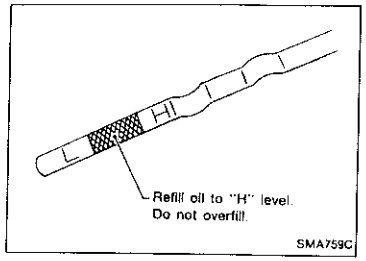

4. Check oil level.
5. Start engine and check area around drain plug and oil filter for oil leakage.
6. Run engine for a few minutes, then turn it off. After several minutes, check oil level.

Changing Oil Filter

1. Remove oil filter.

WARNING:

Be careful not to burn yourself, as the engine and the engine oil are hot.

The oil filter is a small full-flow cartridge type and is provided with a relief valve.

Refer to LC section ("OIL FILTER").

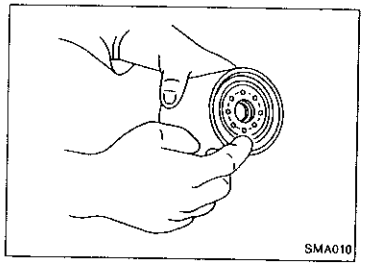

2. Before installing new oil filter, clean the oil filter mounting surface on cylinder block, and coat the rubber seal of oil filter with a little engine oil.

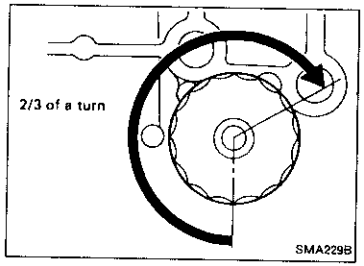

3. Screw in the oil filter until a slight resistance is felt, then tighten additionally more than 2/3 turn.
4. Add engine oil.

Refer to "Changing Engine Oil".

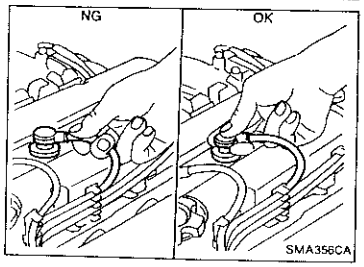

Changing Spark Plugs

1. Disconnect ignition wires from spark plugs at boot. Do not pull on the wire.
2. Remove spark plugs with 16 mm (0.63 in) spark plug wrench.

Spark plug:

Standard type	**PFR6B-9**
Hot type	**PFR5B-9**
Cold type	**PFR7B-9**

[O]: 20 - 29 N·m
(2.0 - 3.0 kg-m, 14 - 22 ft-lb)

Changing Spark Plugs (Cont'd)

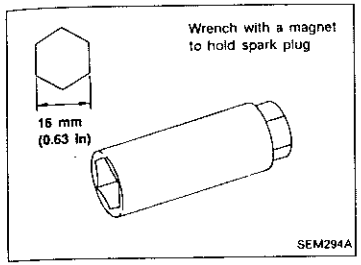

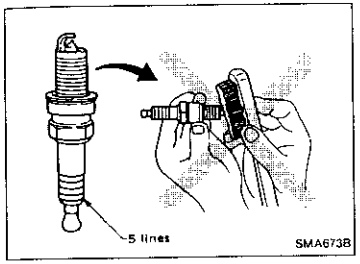

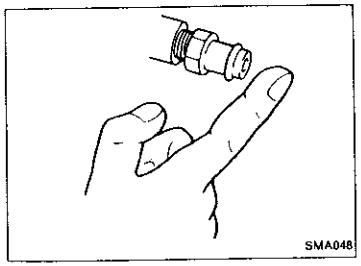

- **Checking and adjusting plug gap are not required between renewals.**
- **Do not use a wire brush for cleaning.**
- **If plug tip is covered with carbon, spark plug cleaner may be used.**

Cleaner air pressure:
Less than 588 kPa (5.9 bar, 6 kg/cm², 85 psi)
Cleaning time:
Less than 20 seconds

Checking Positive Crankcase Ventilation (PCV) System

Checking PCV valve

With engine running at idle, remove ventilation hose from PCV valve; if valve is working properly, a hissing noise will be heard as air passes through it and a strong vacuum should be felt immediately when a finger is placed over valve inlet.

Checking Vacuum Hoses and Connections

Check vacuum hoses for improper attachment and for leaks, cracks, damage, loose connections, chafing and deterioration.

Checking Vapor Lines

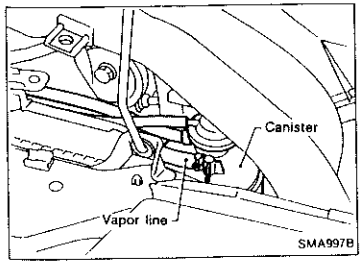

1. Visually inspect vapor lines for improper attachment and for cracks, damage, loose connections, chafing and deterioration.
2. Inspect vacuum relief valve of fuel tank filler cap for clogging, sticking, etc.

Refer to "EVAPORATIVE EMISSION SYSTEM" in EC section.

Checking Heated Oxygen Sensor (HO2S)

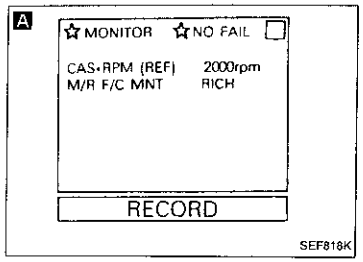

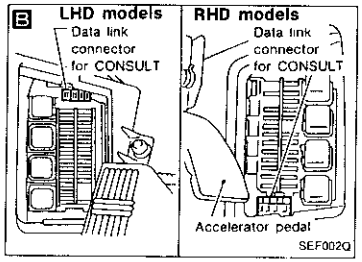

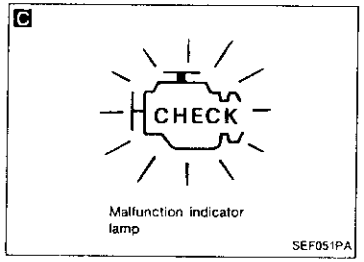

Checking procedure

INSPECTION START

Start engine and warm it up until water temperature indicator points to the middle of gauge.

A B C

1. See "M/R F/C MNT" in "Data monitor" mode.
2. Run engine at about 2,000 rpm for about 2 minutes under no-load.
3. Maintaining engine at 2,000 rpm under no-load (engine is warmed up sufficiently.), check that the monitor fluctuates between "LEAN" and "RICH" more than 5 times during 10 seconds.
   1 time **RICH → LEAN → RICH**
   2 times **RICH → LEAN → RICH →LEAN → RICH .....**

— OR —

1. Set "Heated oxygen sensor monitor" in the Diagnostic test mode II. (Refer to EC section.)
2. Run engine at about 2,000 rpm for about 2 minutes under no-load.
3. Maintaining engine at 2,000 rpm under no-load, check to make sure that malfunction indicator lamp on the instrument panel goes ON and OFF more than 5 times during 10 seconds.

OK

NG → Check and adjustment should be made by referring to IDLE SPEED/ IGNITION TIMING/IDLE MIXTURE RATIO INSPECTION in EC section.

INSPECTION END

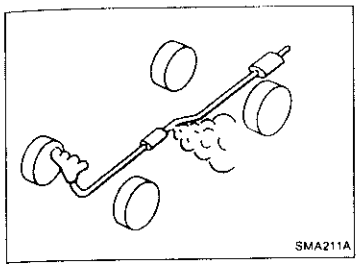

Checking Exhaust System

- Check exhaust pipes, muffler and mounting for improper attachment, leaks, cracks, damage, loose connections, chafing and deterioration.

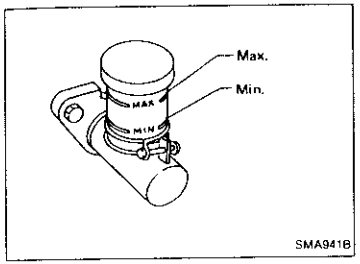

Checking Clutch Fluid Level and Leaks

- If fluid level is extremely low, check clutch system for leaks.

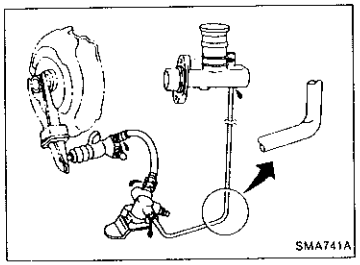

Checking Clutch System

Check fluid lines and operating cylinder for improper attachment, cracks, damage, loose connections, chafing and deterioration.

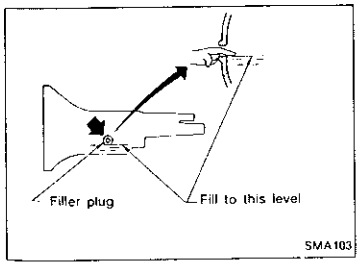

Checking M/T Oil

- Check oil level and for oil leakage.

Never start engine while checking oil level.

Filler plug:
(O): 25 - 34 N·m (2.5 - 3.5 kg-m, 18 - 25 ft-lb)

Changing M/T Oil

1. Drain oil from drain plug and refill with new gear oil.
2. Check oil level.

Oil grade: API GL-4
Viscosity:
See "RECOMMENDED FLUIDS AND LUBRICANTS".
Capacity: 2.5 ℓ (4-3/8 Imp pt)
Drain plug:
(O): 25 - 34 N·m (2.5 - 3.5 kg-m, 18 - 25 ft-lb)

After refilling oil, leave M/T unattended for about two minutes. Then check oil level again following the above procedure. Add oil if necessary.

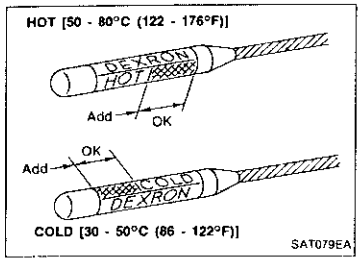

Checking A/T Fluid

1. Warm up engine.
2. Check for fluid leakage.
3. Before driving, fluid level can be checked at fluid temperatures of 30 to 50°C (86 to 122°F) using "COLD" range on dipstick.
   a. Park vehicle on level surface and set parking brake.
   b. Start engine and move selector lever through each gear position. Leave selector lever in "P" position.
   c. Check fluid level with engine idling.
   d. Remove dipstick and note reading. If level is at low side of either range, add fluid to the charging pipe.
   e. Re-insert dipstick into charging pipe as far as it will go.
   f. Remove dipstick and note reading. If reading is at low side of range, add fluid to the charging pipe. Do not overfill.
4. Drive vehicle for approximately 5 minutes in urban areas.
5. Re-check fluid level at fluid temperatures of 50 to 80°C (122 to 177°F) using "HOT" range on dipstick.
6. Check fluid condition. If fluid is very dark or smells burned, or contains friction material (clutches, band, etc.), check operation of A/T. Refer to AT section for checking operation of A/T.

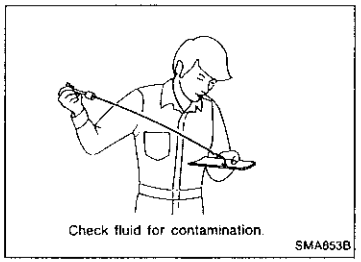

Changing A/T Fluid

1. Warm up A/T fluid.
2. Stop engine.
3. Drain A/T fluid from drain plug and refill with new A/T fluid. Always refill same volume with drained fluid.
   Oil grade:
   Genuine Nissan ATF or equivalent.
   Oil capacity (With torque converter):
   7.9 ℓ (7 lmp qt)
   Drain plug:
   : 29 - 39 N·m (3.0 - 4.0 kg-m, 22 - 29 ft-lb)
4. Run engine at idle speed for five minutes.
5. Check fluid level and condition.
   Refer to "Checking A/T Fluid".
   If fluid is still dirty, repeat step 2. through 5.

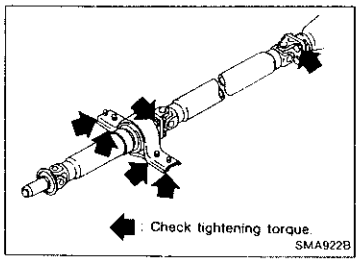

Checking Propeller Shaft

Check propeller shaft and center bearing for damage, looseness or grease leakage. If greasing points are provided, supply grease as necessary.
Refer to PD section.

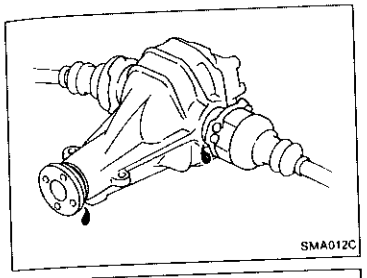

Checking Differential Gear Oil

- Check oil level and for oil leakage.
  Filler plug:
  : 39 - 59 N·m (4 - 6 kg-m, 29 - 43 ft-lb)

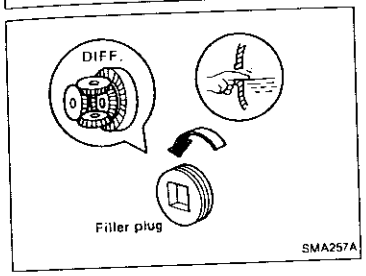

Changing Differential Gear Oil

1. Drain oil from drain plug and refill with new gear oil.
2. Check oil level.
   Oil grade: API GL-5
   Viscosity:
   See "RECOMMENDED FLUIDS AND LUBRICANTS".
   Capacity:
   1.2 - 1.4 ℓ (2-1/8 - 2-1/2 Imp pt)
   Drain plug:
   : 39 - 59 N·m (4 - 6 kg-m, 29 - 43 ft-lb)

Balancing Wheels

- Adjust wheel balance using road wheel center.
  Wheel balance (Maximum allowable unbalance):
  Refer to SDS (MA-25).

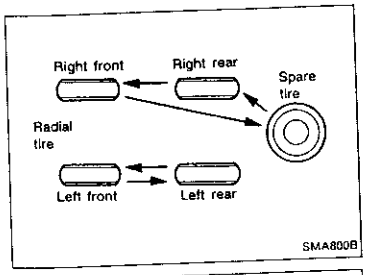

Tire Rotation

- **Do not include the T-type spare tire when rotating the tires.**
  Wheel nuts:
  : 99 - 117 N·m (10.1 - 11.9 kg-m, 73.0 - 86.3 ft-lb)

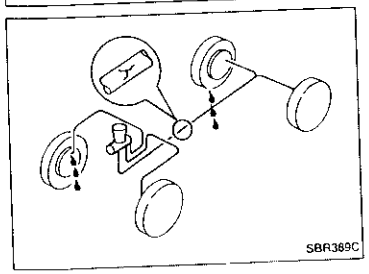

Checking Brake Fluid Level and Leaks

- If fluid level is extremely low, check brake system for leaks.

Checking Brake Lines and Cables

- Check brake fluid lines and parking brake cables for improper attachment, leaks, chafing, abrasions and deterioration, etc.

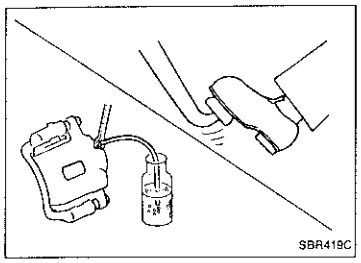
SBR419C

Changing Brake Fluid

1. Drain brake fluid from each air bleeder valve.
2. Refill until new brake fluid comes out from each air bleeder valve. Use same procedure as in bleeding hydraulic system to refill brake fluid. Refer to BR section.

- **Refill with recommended brake fluid.**
- **Never reuse drained brake fluid.**
- **Never mix different type fluids (DOT3 and DOT4).**
- **Be careful not to splash brake fluid on painted areas.**

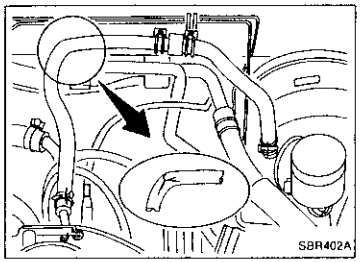
SBR402A

Checking Brake Booster, Vacuum Hoses, Connections and Check Valve

Check vacuum lines, connections and check valve for improper attachment, air tightness, chafing and deterioration.

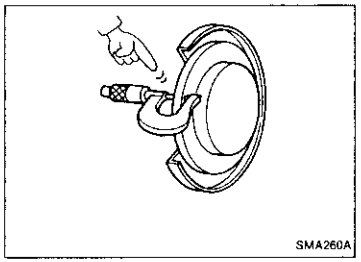
SMA260A

Checking Disc Brake

ROTOR

- Check condition and thickness.

Unit: mm (in)

	Front	Rear
Disc brake type	OPF25V	CL11H
Standard thickness	30.0 (1.181)	9.0 (0.354)
Minimum thickness	28.0 (1.102)	8.0 (0.315)

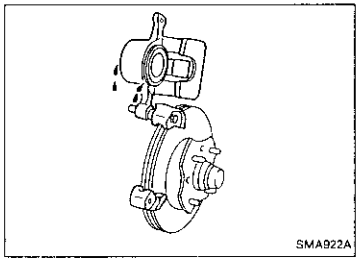
SMA922A

CALIPER

- Check for leakage.

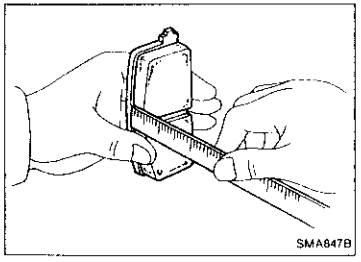
SMA647B

PAD

- Check for wear or damage.

Unit: mm (in)

	Front	Rear
Disc brake type	OPF25V	CL11H
Standard thickness	10.0 (0.394)	9.5 (0.374)
Minimum thickness	2.0 (0.079)	

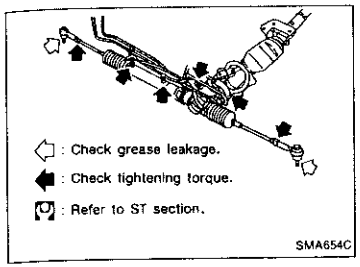

SMA654C

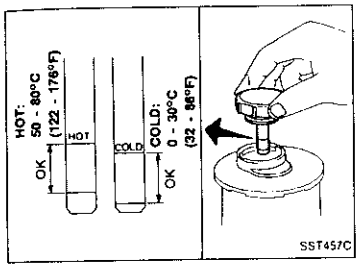

SST457C

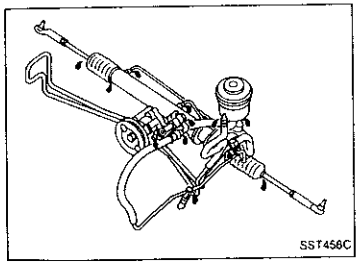
SST456C

Checking Steering Gear and Linkage

STEERING GEAR

- Check gear housing and boots for looseness, damage or grease leakage.
- Check connection with steering column for looseness.

STEERING LINKAGE

- Check ball joint, dust cover and other component parts for looseness, wear, damage or grease leakage.

Checking Power Steering Fluid and Lines

CHECKING FLUID LEVEL

Check fluid level with dipstick on reservoir cap. Use "HOT" range at fluid temperatures of 50 to 80°C (122 to 176°F). Use "COLD" range at fluid temperatures of 0 to 30°C (32 to 86°F).

CAUTION:

- **Do not overfill.**
- **Recommended fluid is Automatic Transmission Fluid type "DEXRON™" or equivalent.**

CHECKING LINES

Check lines for improper attachment, leaks, cracks, damage, loose connections, chafing and deterioration.

Lubricating Locks, Hinges and Hood Latches

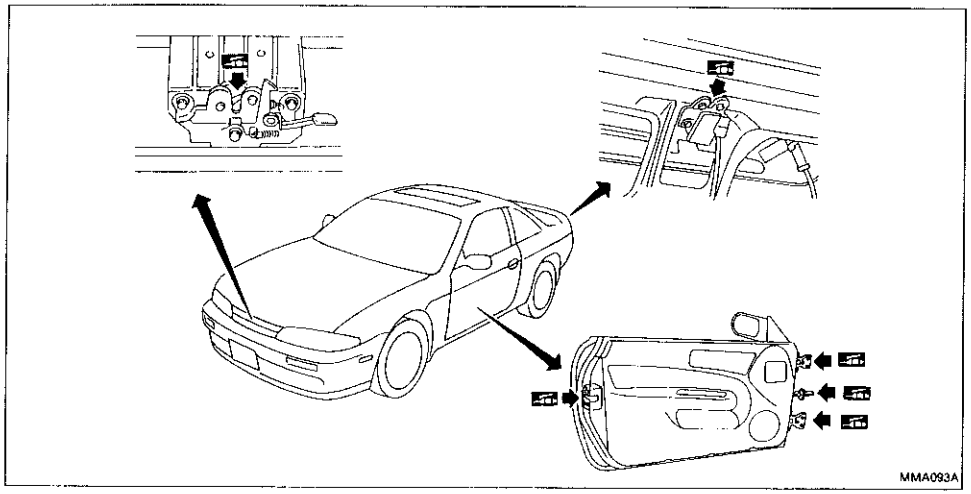

Checking Seat Belts, Buckles, Retractors, Anchors and Adjusters

CAUTION:

- **After any collision, inspect all seat belt assemblies, including retractors and other attached hardwares (i.e. guide rail set). Nissan recommends to replace all seat belt assemblies in use during a collision, unless not damaged and properly operating after minor collision.**
  Also inspect seat belt assemblies not in use during a collision, and replace if damaged or improperly operating.
- **If any component of seat belt assembly is questionable, do not repair. Replace as seat belt assembly.**
- **If webbing is cut, frayed, or damaged, replace belt assembly.**
- **Never oil tongue and buckle.**
- **Use a genuine seat belt assembly.**

For seat belt pre-tensioner, refer to section RS.

Anchor bolt
43 - 55 N-m (4.4 - 5.6 kg-m, 32 - 41 ft-lb)

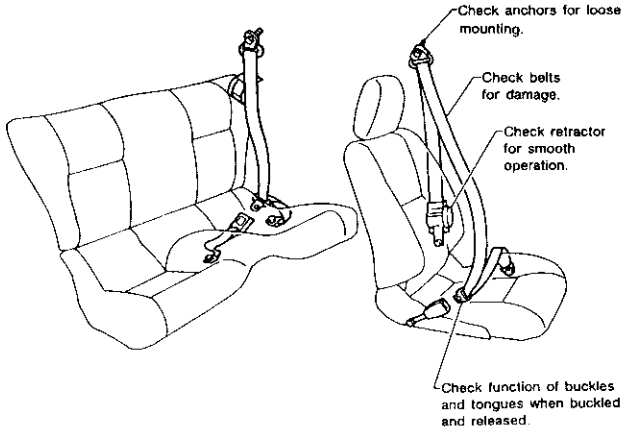

Engine Maintenance

INSPECTION AND ADJUSTMENT

Drive belt deflection

Unit: mm (in)

	Used belt deflection		Deflection of new belt
	Limit	Deflection after adjustment	
Alternator	11 (0.43)	7 - 8 (0.28 - 0.31)	4 - 5 (0.16 - 0.20)
Air conditioner compressor	7 (0.28)	5 - 6 (0.20 - 0.24)	6 - 7 (0.24 - 0.28)
Power steering oil pump	15 (0.59)	11 - 12 (0.43 - 0.47)	9 - 10 (0.35 - 0.39)
Applied pushing force	98 N (10 kg, 22 lb)		

Coolant and oil capacity

Unit: ℓ (Imp qt)

Coolant (with reservoir tank)	Approx. 7.0 (6-1/8)
Reservoir tank	1.8 (1-5/8)
Engine oil	
With oil filter change	Approx. 3.7 (3-1/4)
Without oil filter change	Approx. 3.5 (3-1/8)

Spark plug

Platinum-tipped type

Standard type	PFR6B-9
Hot type	PFR5B-9
Cold type	PFR7B-9

Cooling system

Unit: kPa (bar, kg/cm², psi)

Radiator cap relief pressure	78 - 98 (0.78 - 0.98, 0.8 - 1.0, 11 - 14)
Cooling system leakage testing pressure	157 (1.57, 1.6, 23)

TIGHTENING TORQUE

Unit	N-m	kg-m	ft-lb
Oil pan drain plug	29 - 39	3.0 - 4.0	22 - 29
Spark plug	20 - 29	2.0 - 3.0	14 - 22
Camshaft position sensor	7 - 8	0.7 - 0.8	5.1 - 5.8
Crankshaft pulley	142 - 152	14.5 - 15.5	105 - 112
Timing belt tensioner pulley nut	22 - 29	2.2 - 3.0	16 - 22

Chassis and Body Maintenance

INSPECTION AND ADJUSTMENT

Wheel balance

Maximum allowable unbalance	Dynamic (at rim flange)	g (oz)	10 (0.35) (One side)
	Static	g (oz)	20 (0.71)

Brake

Unit: mm (in)

Disc brake	
Pad	
Standard thickness	
OPF25V	10.0 (0.394)
CL11H	9.5 (0.374)
Minimum thickness	
OPF25V	2.0 (0.079)
CL11H	2.0 (0.079)
Rotor	
Standard thickness	
OPF25V	30.0 (1.181)
CL11H	9.0 (0.354)
Minimum thickness	
OPF25V	28.0 (1.102)
CL11H	8.0 (0.315)

Incident Simulation Tests (Cont'd)

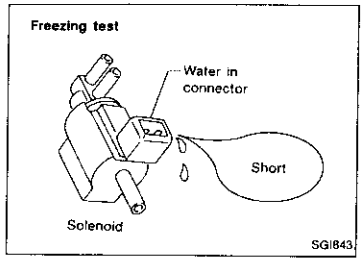

FREEZING

The customer may indicate the incident goes away after the car warms up (winter time). In such cases the cause could be related to water freezing somewhere in the wiring/electrical system.

There are two methods to check for this. The first is to arrange for the owner to leave his car overnight. Make sure it will get cold enough to demonstrate his complaint. Leave the car parked outside overnight. In the morning, do a quick and thorough diagnosis of those electrical components which could be affected.

The second method is to put the suspect component into a freezer long enough for any water to freeze. Reinstall the part into the car and check for the reoccurrence of the incident. If it occurs, repair or replace the component.

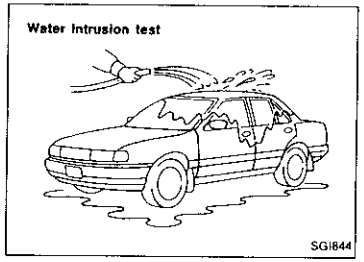

WATER INTRUSION

The incident may occur only during high humidity or in rainy/snowy weather. In such cases the incident could be caused by water intrusion on an electrical part. This can be simulated by soaking the car or running it through a car wash.

Do not spray water directly on any electrical components.

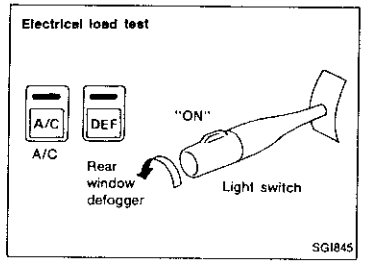

ELECTRICAL LOAD

The incident may be electrical load sensitive. Perform diagnosis with all accessories (including A/C, rear window defogger, radio, fog lamps) turned on.

COLD OR HOT START UP

On some occasions an electrical incident may occur only when the car is started cold. Or it may occur when the car is restarted hot shortly after being turned off. In these cases you may have to keep the car overnight to make a proper diagnosis.

Circuit Inspection

INTRODUCTION

In general, testing electrical circuits is an easy task if it is approached in a logical and organized method. Before beginning it is important to have all available information on the system to be tested. Also, get a thorough understanding of system operation. Then you will be able to use the appropriate equipment and follow the correct test procedure.

You may have to simulate vehicle vibrations while testing electrical components. **Gently shake** the wiring harness or electrical component to do this.

OPEN — A circuit is open when there is no continuity through a section of the circuit.

SHORT — There are two types of shorts.

1. SHORT CIRCUIT — When a circuit contacts another circuit and causes the normal resistance to change.
2. SHORT TO GROUND — When a circuit contacts a ground source and grounds the circuit.

TESTING FOR "OPENS" IN THE CIRCUIT

Before you begin to diagnose and test the system, you should rough sketch a schematic of the system. This will help you to logically walk through the diagnosis process. Drawing the sketch will also reinforce your working knowledge of the system.

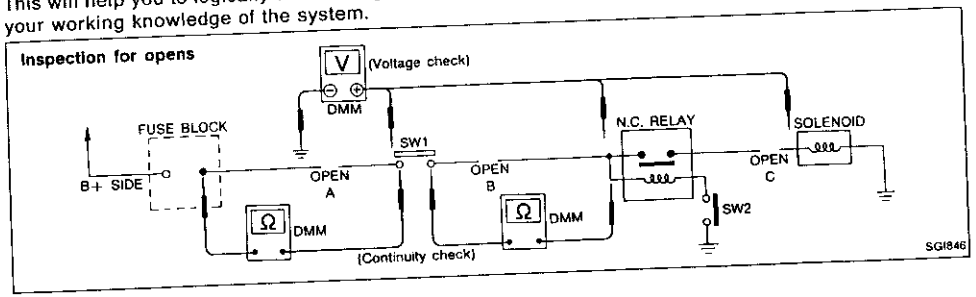

Continuity check method

The continuity check is used to find an open in the circuit. The Digital Multimeter (DMM) set on the resistance function will indicate an open circuit as over limit (OL, no beep tone or no ohms symbol). Make sure to always start with the DMM at the highest resistance level.

To help in understanding the diagnosis of open circuits please refer to the schematic above.

1. Disconnect the battery negative cable.
2. Start at one end of the circuit and work your way to the other end. (At the fuse block in this example)
3. Connect one probe of the DMM to the fuse block terminal on the load side.
4. Connect the other probe to the fuse block (power) side of SW1. Little or no resistance will indicate that portion of the circuit has good continuity. If there were an open in the circuit, the DMM would indicate an over limit or infinite resistance condition. (point A)
5. Connect the probes between SW1 and the relay. Little or no resistance will indicate that portion of the circuit has good continuity. If there were an open in the circuit, the DMM would indicate an over limit or infinite resistance condition. (point B)
6. Connect the probes between the relay and the solenoid. Little or no resistance will indicate that portion of the circuit has good continuity. If there were an open in the circuit, the DMM would indicate an over limit or infinite resistance condition. (point C)

Any circuit can be diagnosed using the approach in the above example.

Circuit Inspection (Cont'd)

Voltage check method

To help in understanding the diagnosis of open circuits please refer to the previous schematic.
In any powered circuit, an open can be found by methodically checking the system for the presence of voltage. This is done by switching the DMM to the voltage function.

1. Connect one probe of the DMM to a known good ground.
2. Begin probing at one end of the circuit and work your way to the other end.
3. With SW1 open, probe at SW1 to check for voltage.
   voltage; open is further down the circuit than SW1.
   no voltage; open is between fuse block and SW1 (point A).
4. Close SW1 and probe at relay.
   voltage; open is further down the circuit than the relay.
   no voltage; open is between SW1 and relay (point B).
5. Close the relay and probe at the solenoid.
   voltage; open is further down the circuit than the solenoid.
   no voltage; open is between relay and solenoid (point C).

Any powered circuit can be diagnosed using the approach in the above example.

TESTING FOR "SHORTS" IN THE CIRCUIT

To simplify the discussion of shorts in the system please refer to the schematic below.

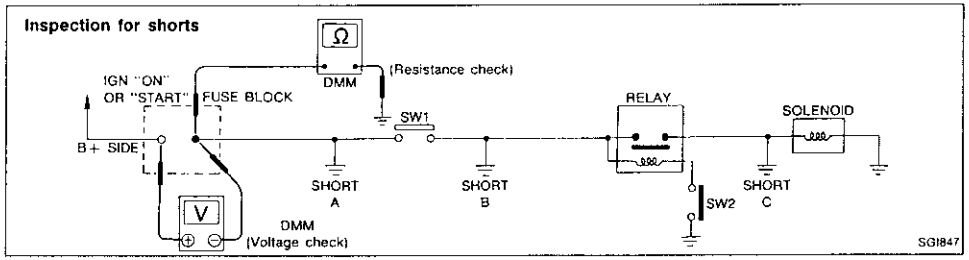

Resistance check method

1. Disconnect the battery negative cable and remove the blown fuse.
2. Disconnect all loads (SW1 open, relay disconnected and solenoid disconnected) powered through the fuse.
3. Connect one probe of the ohmmeter to the load side of the fuse terminal. Connect the other probe to a known good ground.
4. With SW1 open, check for continuity.
   continuity; short is between fuse terminal and SW1 (point A).
   no continuity; short is further down the circuit than SW1.
5. Close SW1 and disconnect the relay. Put probes at the load side of fuse terminal and a known good ground. Then, check for continuity.
   continuity; short is between SW1 and the relay (point B).
   no continuity; short is further down the circuit than the relay.
6. Close SW1 and jump the relay contacts with jumper wire. Put probes at the load side of fuse terminal and a known good ground. Then, check for continuity.
   continuity; short is between relay and solenoid (point C).
   no continuity; check solenoid, retrace steps.

Voltage check method

1. Remove the blown fuse and disconnect all loads (i.e. SW1 open, relay disconnected and solenoid disconnected) powered through the fuse.
2. Turn the ignition key to the ON or START position. Verify battery voltage at the B + side of the fuse terminal (one lead on the B + terminal side of the fuse block and one lead on a known good ground).
3. With SW1 open and the DMM leads across both fuse terminals, check for voltage.
   voltage; short is between fuse block and SW1 (point A).

Circuit Inspection (Cont'd)

   no voltage; short is further down the circuit than SW1.
4. With SW1 closed, relay and solenoid disconnected and the DMM leads across both fuse terminals, check for voltage.
   voltage; short is between SW1 and the relay (point B).
   no voltage; short is further down the circuit than the relay.
5. With SW1 closed, relay contacts jumped with fused jumper wire check for voltage.
   voltage; short is down the circuit of the relay or between the relay and the disconnected solenoid (point C).
   no voltage; retrace steps and check power to fuse block.

GROUND INSPECTION

Ground connections are very important to the proper operation of electrical and electronic circuits. Ground connections are often exposed to moisture, dirt and other corrosive elements. The corrosion (rust) can become an unwanted resistance. This unwanted resistance can change the way a circuit works.
Electronically controlled circuits are very sensitive to proper grounding. A loose or corroded ground can drastically affect an electronically controlled circuit. A poor or corroded ground can easily affect the circuit. Even when the ground connection looks clean, there can be a thin film of rust on the surface.
When inspecting a ground connection follow these rules:

1. Remove the ground bolt screw or clip.
2. Inspect all mating surfaces for tarnish, dirt, rust, etc.
3. Clean as required to assure good contact.
4. Reinstall bolt or screw securely.
5. Inspect for "add-on" accessories which may be interfering with the ground circuit.
6. If several wires are crimped into one ground eyelet terminal, check for proper crimps. Make sure all of the wires are clean, securely fastened and providing a good ground path. If multiple wires are cased in one eyelet make sure no ground wires have excess wire insulation.

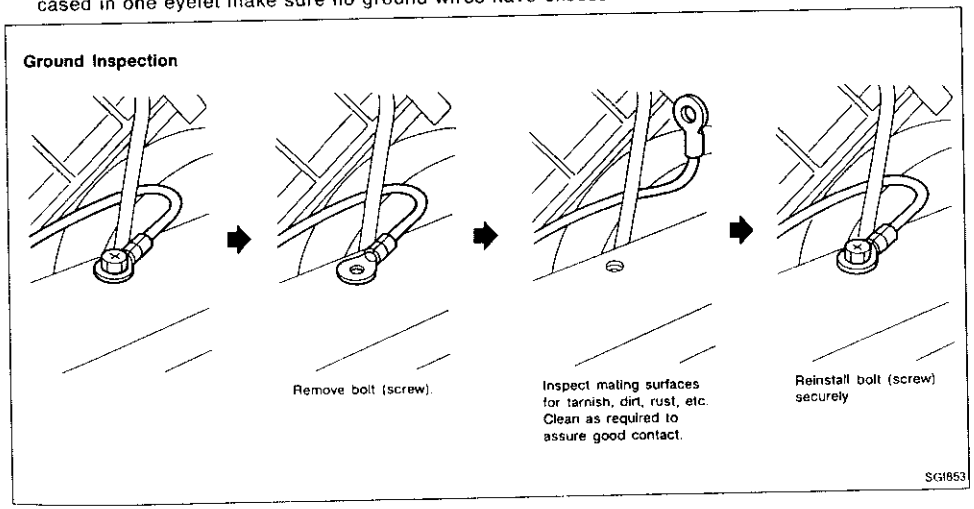

Circuit Inspection (Cont'd)

VOLTAGE DROP TESTS

Voltage drop tests are often used to find components or circuits which have excessive resistance. A voltage drop in a circuit is caused by a resistance **when the circuit is in operation**.
Check the wire in the illustration. When measuring resistance with ohmmeter, contact by a single strand of wire will give reading of 0 ohms. This would indicate a good circuit. When the circuit operates, this single strand of wire is not able to carry the current. The single strand will have a high resistance to the current. This will be picked up as a slight voltage drop.
Unwanted resistance can be caused by many situations as follows:

- Undersized wiring (single strand example)
- Corrosion on switch contacts
- Loose wire connections or splices.

If repairs are needed always use wire that is of the same or larger gauge.

Measuring voltage drop — Accumulated method

1. Connect the voltmeter across the connector or part of the circuit you want to check. The positive lead of the voltmeter should be closer to power and the negative lead closer to ground.
2. Operate the circuit.
3. The voltmeter will indicate how many volts are being used to "push" current through that part of the circuit.

Note in the illustration that there is an excessive 4.1 volt drop between the battery and the bulb.

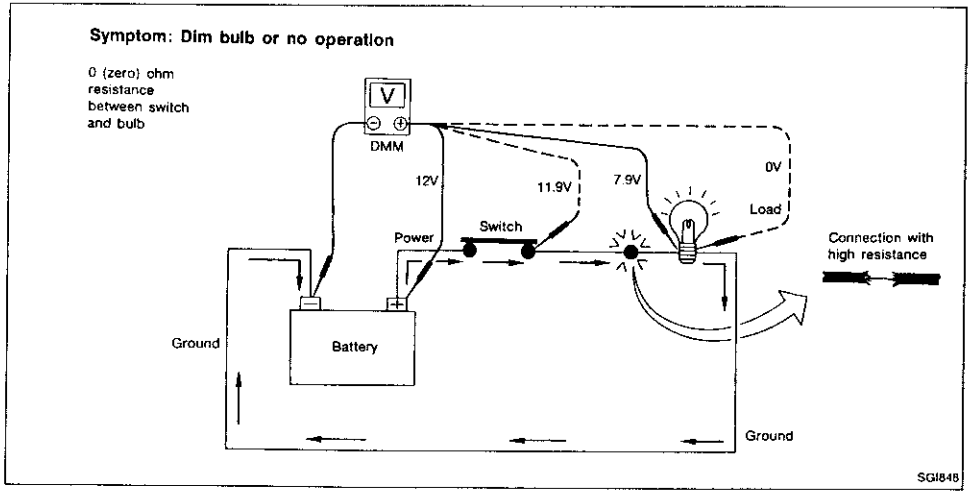

Measuring voltage drop — Step by step

The step by step method is most useful for isolating excessive drops in low voltage systems (such as those in "Computer Controlled Systems").
Circuits in the "Computer Controlled System" operate on very low amperage.
The (Computer Controlled) system operations can be adversely affected by any variation in resistance in the system. Such resistance variation may be caused by poor connection, improper installation, improper wire gauge or corrosion.
The step by step voltage drop test can identify a component or wire with too much resistance.

Circuit Inspection (Cont'd)

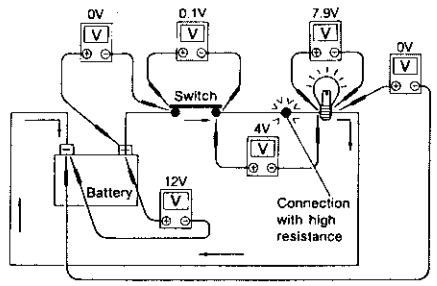

1. Connect the voltmeter as shown, starting at the battery and working your way around the circuit.
2. An unusually large voltage drop will indicate a component or wire that needs to be repaired. As you can see the illustration above, the poor connection causes a 4 volt drop.

The chart that follows illustrates some maximum allowable voltage drops. These values are given as a guideline, the exact value for each component may vary.

COMPONENT	VOLTAGE DROP
Wire	negligible <.001 volts
Ground Connections	Approx. 0.1 volts
Switch Contacts	Approx. 0.3 volts

SGI854

Circuit Inspection (Cont'd)

Relationship between open/short (high resistance) circuit and the ECU pin control

System Description: When the switch is ON, the ECU lights up the lamp.

Case 1

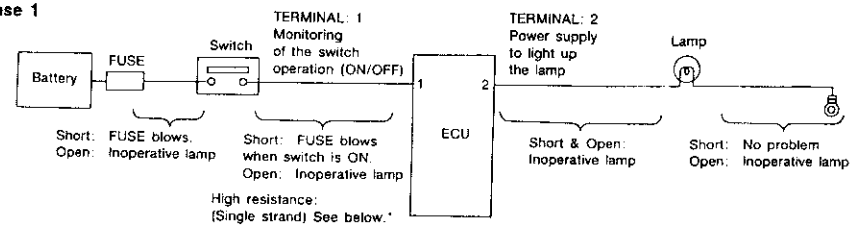

Input-output voltage chart

Pin No.	Item	Condition	Voltage value [V]	In case of high resistance such as single strand [V] *
1	Switch	Switch ON	Battery voltage	Lower than battery voltage Approx. 8 (Example)
		OFF	Approx. 0	Approx. 0
2	Lamp	Switch ON	Battery voltage	Approx. 0 (Inoperative lamp)
		OFF	Approx. 0	Approx. 0

The voltage value is based on the body ground.

* : If high resistance exists in the switch side circuit (caused by a single strand), terminal 1 does not detect battery voltage. ECM does not detect the switch is ON even if the switch does turn ON. Therefore, the ECM does not supply power to light up the lamp.

Case 2

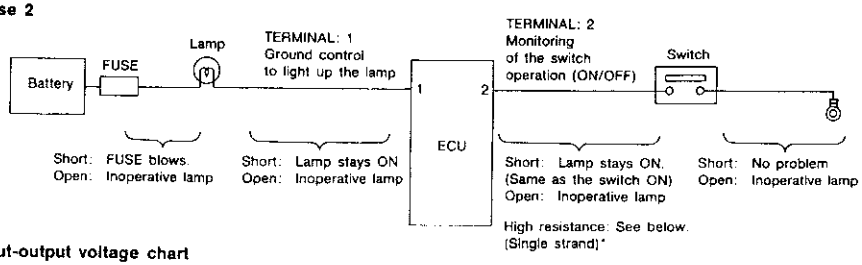

Input-output voltage chart

Pin No.	Item	Condition	Voltage value [V]	In case of high resistance such as single strand [V] *
1	Lamp	Switch ON	Approx. 0	Battery voltage (Inoperative lamp)
		OFF	Battery voltage	Battery voltage
2	Switch	Switch ON	Approx. 0	Higher than 0 Approx. 4 (Example)
		OFF	Approx. 5	Approx. 5

The voltage value is based on the body ground

* : If high resistance exists in the switch side circuit (caused by a single strand), terminal 2 does not detect approx. 0V. ECM does not detect the switch is ON even if the switch does turn ON. Therefore, the ECM does not control ground to light up the lamp.

SGI849

NOTICE

The flow chart indicates work procedures required to diagnose problems effectively. Observe the following instructions before diagnosing.

1) **Use the flow chart after locating probable causes of a problem following the "Preliminary Check" or the "Symptom Chart".**
2) **After repairs, re-check that the problem has been completely eliminated.**
3) **Refer to Component Parts and Harness Connector Location for the Systems described in each section for identification/location of components and harness connectors.**
4) **Refer to the Circuit Diagram for Quick Pinpoint Check. If you must check circuit continuity between harness connectors in more detail, such as when a sub-harness is used, refer to Wiring Diagram in each individual section and Harness Layout in EL section for identification of harness connectors.**
5) **When checking circuit continuity, ignition switch should be "OFF".**
6) **Before checking voltage at connectors, check battery voltage.**
7) **After accomplishing the Diagnostic Procedures and Electrical Components Inspection, make sure that all harness connectors are reconnected as they were.**

Example

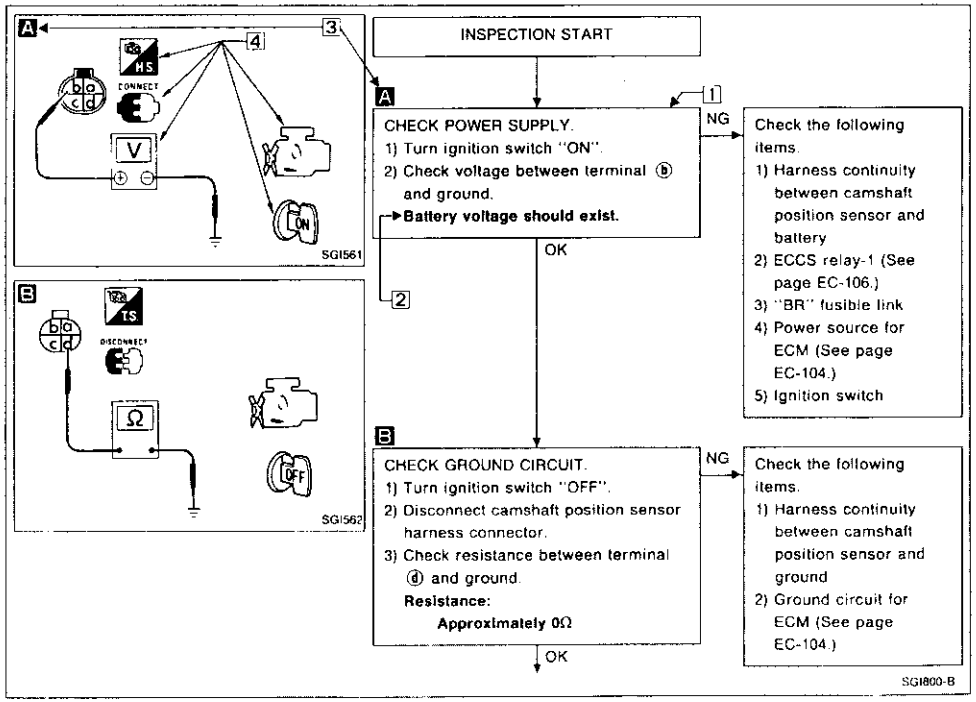

HOW TO FOLLOW THIS FLOW CHART

1 Work and diagnostic procedure

Start to diagnose a problem using procedures indicated in enclosed blocks, as shown in the following example.

A

CHECK POWER SUPPLY.
1) Turn ignition switch "ON".
2) Check voltage between terminal ⑥ and ground.
Battery voltage should exist.

← Check item being performed.

Procedure, steps or measurement results

2 Measurement results

Required results are indicated in bold type in the corresponding block, as shown below:
These have the following meanings:
Battery voltage → 11 - 14V or approximately 12V
Voltage: Approximately 0V → Less than 1V

3 Cross reference of work symbols in the text and illustrations

Illustrations are provided as visual aids for work procedures. For example, symbol A indicated in the left upper portion of each illustration corresponds with the symbol in the flow chart for easy identification. More precisely, the procedure under the "CHECK POWER SUPPLY" outlined previously is indicated by an illustration A .

4 Symbols used in illustrations

Symbols included in illustrations refer to measurements or procedures. Before diagnosing a problem, familiarize yourself with each symbol.

Direction mark

Refer to "CONNECTOR SYMBOLS" on GI-11.

Key to symbols signifying measurements or procedures

Symbol	Symbol explanation	Symbol	Symbol explanation
	Check after disconnecting the connector to be measured.		Procedure without CONSULT
	Check after connecting the connector to be measured.		A/C switch is "OFF".
	Insert key into ignition switch.		A/C switch is "ON".
	Turn ignition switch to "OFF" position.		REC switch is "ON".
	Turn ignition switch to "ON" position.		REC switch is "OFF".
	Turn ignition switch to "START" position.		DEF switch is "ON".
	Turn ignition switch from "OFF" to "ACC" position.		VENT switch is "ON".
	Turn ignition switch from "ACC" to "OFF" position.		Fan switch is "ON". (At any position except for "OFF" position)
	Turn ignition switch from "OFF" to "ON" position.		Fan switch is "OFF".
	Turn ignition switch from "ON" to "OFF" position.		Apply fused battery positive voltage directly to components.
	Do not start engine, or check with engine stopped.		Drive vehicle.
	Start engine, or check with engine running.		Disconnect battery negative cable.
	Apply parking brake		Depress brake pedal
	Release parking brake.		Release brake pedal.
C H	Check after engine is warmed up sufficiently.		Depress accelerator pedal.
	Voltage should be measured with a voltmeter.		Release accelerator pedal.
	Circuit resistance should be measured with an ohmmeter.		Pin terminal check for SMJ type ECM and A/T control unit connectors. **For details regarding the terminal arrangement, refer to the foldout page.**
	Current should be measured with an ammeter.		
	Procedure with CONSULT		

Function and System Application

Diagnostic test mode	Function	ECCS	A/T	AIR BAG*
Work support	This mode enables a technician to adjust some devices faster and more accurately by following the indications on CONSULT.	X	—	—
Self-diagnostic results	Self-diagnostic results can be read and erased quickly.	X	X	X
Data monitor	Input/Output data in the ECM can be read.	X	X	—
Active test	Diagnostic Test Mode in which CONSULT drives some actuators apart from the ECMs and also shifts some parameters in a specified range.	X	—	—
ECM part number	ECM part number can be read.	X	X	—
Function test	Conducted by CONSULT instead of a technician to determine whether each system is "OK" or "NG".	X	—	—

X: Applicable
*: The existing program card (EE922) is applicable only to driver's side air bag system on vehicles outside Europe.

Lithium Battery Replacement

CONSULT contains a lithium battery. When replacing the battery obey the following:

WARNING:
Replace the lithium battery with SANYO Electric Co., Ltd., CR2032 only. Use of another battery may present a risk of fire or explosion. The battery may present a fire or chemical burn hazard if mistreated.
Do not recharge, disassemble of dispose of in fire.
Keep the battery out of reach of children and discard used battery conforming to the local regulations.

Checking Equipment

When ordering the below equipment, contact your NISSAN distributor.

Tool name	Description
NISSAN CONSULT ① CONSULT unit and accessories ② Program card (EE 922) (AE930)*	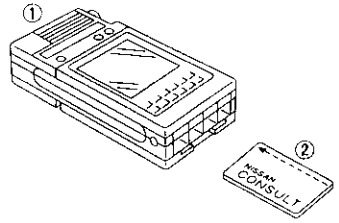 NT004

* For Australia

Model Variation

Body type	Engine	Destination	Axle	Transmission	Applied model: Right-hand drive	Applied model: Left-hand drive
Coupe	SR20DET	Europe	2WD	5-speed M/T	GBYARRF-UE4	GBYALRF-UG4
				4-speed A/T	GBYARRA-UE4	GBYALRA-UG4
		Australia		5-speed M/T	GBYARRF-UM4	—
				4-speed A/T	GBYARRA-UM4	—
		Except Europe and Australia		5-speed M/T	GBYARTF-UH4	GBYALRF-UG4
				4-speed A/T	GBYARTA-UH4	GBYALRA-UG4

Prefix and suffix designations:

G BY A R R F S14 U E 4

- G — Body type: G : Coupe
- BY — Engine type: BY : SR20DET
- A — Axle: A : 2-wheel drive models
- R — Steering side: L : Left-hand drive; R : Right-hand drive
- R — Grade: R : Base; T : SE
- F — Transmission: F : 5-speed manual; A : 4-speed automatic
- S14 — Model
- U — Fuel supply: U : Turbocharged
- E — Destination: G : LHD; M : Australia; E : RHD for Europe; H : RHD except for Europe and Australia
- 4 — Others: 4 : 4 passengers

Identification Number

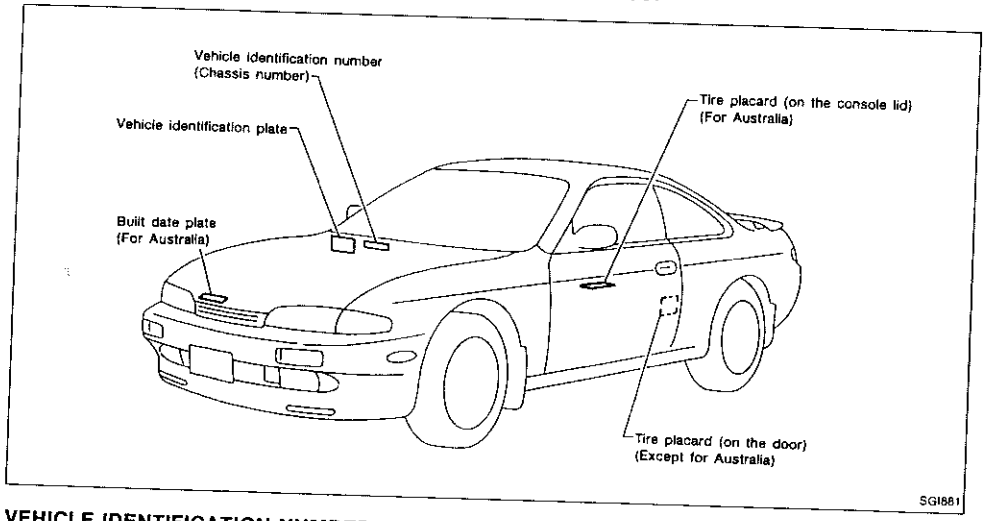

VEHICLE IDENTIFICATION NUMBER ARRANGEMENT

For Europe

JN1 G B A S14 U 0 XXXXXX

- JN1 — Manufacturer
  - JN1 : Nissan, Passenger vehicle
- G — Body type
  - G : Coupe
- B — Engine type
  - B : SR20DET
- A — Axle
  - A : 2-wheel drive models
- S14 — Model
- U — Destination
  - U : Europe
- 0 — Stopgap (no meaning)
- XXXXXX — Vehicle serial number

Identification Number (Cont'd)

For Australia and New Zealand

JN1 G B A S14 A 0 XXXXXX

- JN1 — Manufacturer
  - JN1 : Nissan, Passenger vehicle
- G — Body type
  - G : Coupe
- B — Engine type
  - B : SR20DET
- A — Axle
  - A : 2-wheel drive models
- S14 — Model
- A — Destination
  - A : Australia and New Zealand
- 0 — Stopgap
- XXXXXX — Vehicle serial number

Except Europe, Australia and New Zealand

G B A S14 — XXXXXX

- G — Body type
  - G : Coupe
- B — Engine type
  - B : SR20DET
- A — Axle
  - A : 2-wheel drive models
- S14 — Model
- XXXXXX — Vehicle serial number

Identification Number (Cont'd)

IDENTIFICATION PLATE

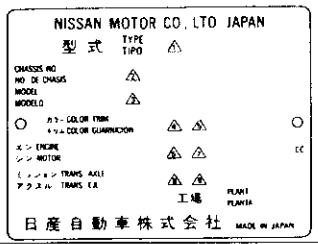

1 Type
2 Vehicle identification number (Chassis number)
3 Model
4 Body color code
5 Trim color code
6 Engine model
7 Engine displacement
8 Transmission model
9 Axle model

SGI315

ENGINE SERIAL NUMBER

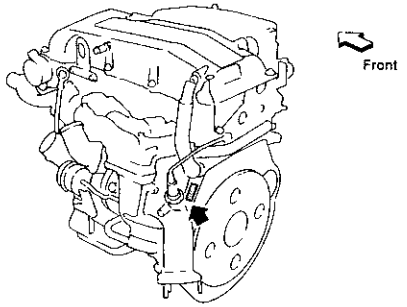

SGI882

MANUAL TRANSMISSION NUMBER

FS5W71C

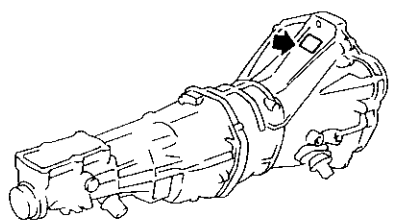

MGI032A

AUTOMATIC TRANSMISSION NUMBER

RE4R01A

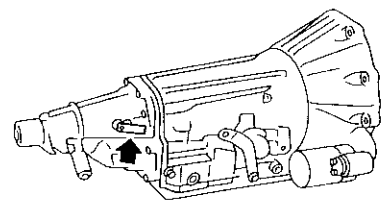

SGI872

Dimensions

Overall length	mm (in)	4,520 (178.0)
Overall width	mm (in)	1,730 (68.1)
Overall height	mm (in)	1,295 (51.0)
Front tread	mm (in)	1,480 (58.3)
Rear tread	mm (in)	1,470 (57.9)
Wheelbase	mm (in)	2,525 (99.4)

Wheels and Tires

Road wheel		
Steel*1		16 x 6-1/2JJ 16 x 4T*2
Aluminum		16 x 6-1/2JJ
Offset	mm (in)	40 (1.57), 30 (1.18)*2
Tire size (Conventional)		205/55R16 89V
Spare tire (T-type)*2		T125/90D16

*1. For Spare tire
*2. For Spare tire (T-type) for Australia

Garage Jack and Safety Stand

WARNING:

- **Never get under the vehicle while it is supported only by the jack. Always use safety stands to support the frame when you have to get under the vehicle.**
- **Place wheel chocks at the front wheels when the rear wheels are raised and place wheel chocks at the rear wheels when the front wheels are raised.**

CAUTION:

- **Place a wooden or rubber block between safety stand and vehicle body when the supporting body is flat.**
- **Never place safety stand at the side member.**

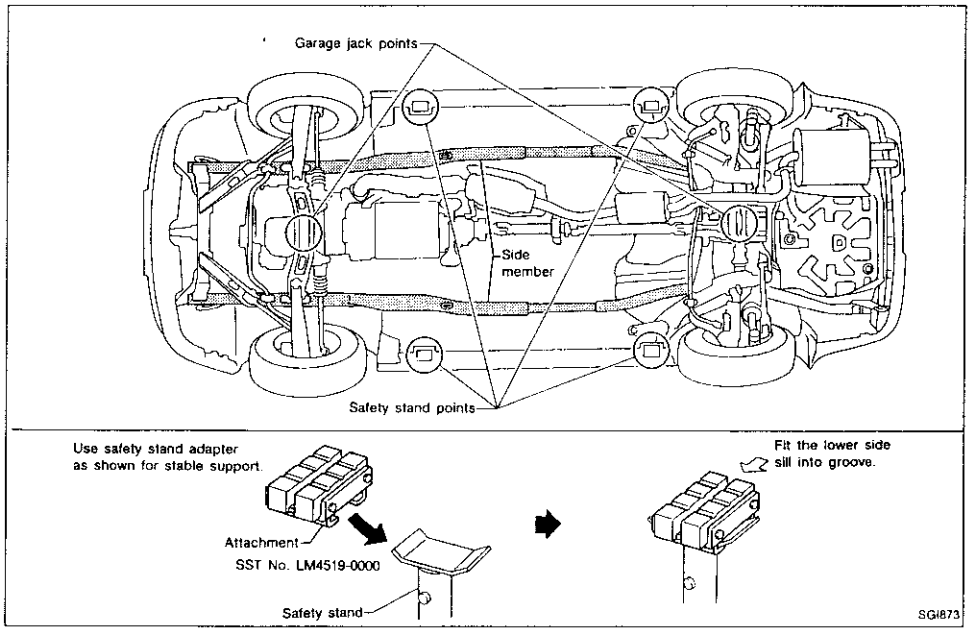

2-pole Lift

WARNING:

When lifting the vehicle, open the lift arms as wide as possible and ensure that the front and rear of the vehicle are well balanced.

When setting the lift arm, do not allow the arm to contact the brake tubes and fuel lines.

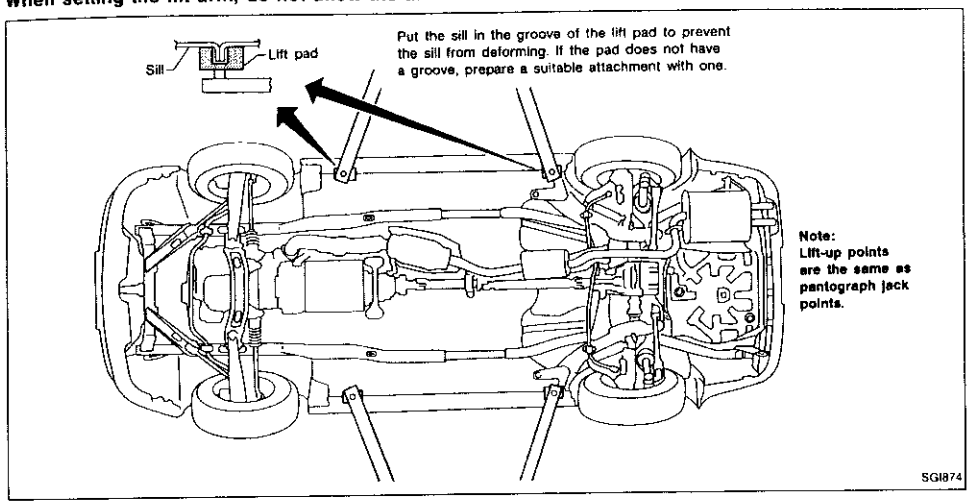

Preparation

SPECIAL SERVICE TOOLS

Tool number (Kent-Moore No.) Tool name	Description
LM4086-0200 (—) Board-on lift attachment	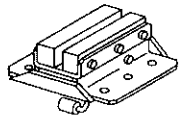 NT001
LM4519-0000 (—) Safety stand attachment	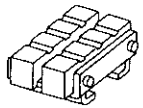 NT002

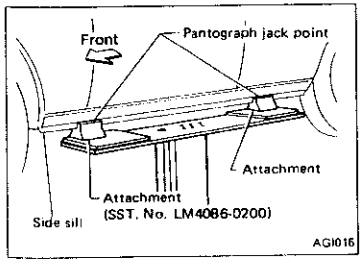

Board-on Lift

CAUTION:

Make sure vehicle is empty when lifting.

- **The board-on lift attachment (LM4086-0200) set at front end of vehicle should be set on the front of the sill under the front door opening.**
- **Position attachments at front and rear ends of board-on lift.**

Tow Truck Towing

CAUTION:

- **All applicable local laws regarding the towing operation must be obeyed.**
- **It is necessary to use proper towing equipment to avoid possible damage to the vehicle during towing operation. Towing is in accordance with Towing Procedure Manual at dealer.**
- **When towing with the rear wheels on the ground, release the parking brake and move the gearshift lever to neutral position ("N" position).**

NISSAN recommends that vehicle be towed with the driving (rear) wheels off the ground as illustrated.

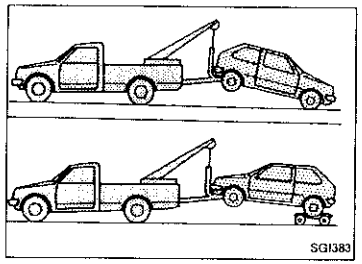

TOWING AN AUTOMATIC TRANSMISSION MODEL WITH FOUR WHEELS ON GROUND OR TOWING WITH FRONT WHEELS RAISED (With rear wheels on ground)

Observe the following restricted towing speeds and distances.

Speed:
Below 50 km/h (30 MPH)
Distance:
Less than 65 km (40 miles)

If the speed or distance must necessarily be greater, remove the propeller shaft beforehand to prevent damage to the transmission.

TOWING POINT

Always pull the cable straight out from the vehicle. Never pull on the hook at a sideways angle.

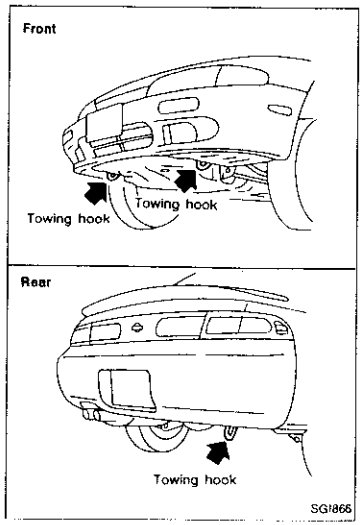

Grade	Bolt size	Bolt diameter* mm	Pitch mm	Tightening torque (Without lubricant)					
				Hexagon head bolt			Hexagon flange bolt		
				N·m	kg-m	ft-lb	N·m	kg-m	ft-lb
4T	M6	6.0	1.0	5.1	0.52	3.8	6.1	0.62	4.5
	M8	8.0	1.25	13	1.3	9	15	1.5	11
			1.0	13	1.3	9	16	1.6	12
	M10	10.0	1.5	25	2.5	18	29	3.0	22
			1.25	25	2.6	19	30	3.1	22
	M12	12.0	1.75	42	4.3	31	51	5.2	38
			1.25	46	4.7	34	56	5.7	41
	M14	14.0	1.5	74	7.5	54	88	9.0	65
7T	M6	6.0	1.0	8.4	0.86	6.2	10	1.0	7
	M8	8.0	1.25	21	2.1	15	25	2.5	18
			1.0	22	2.2	16	26	2.7	20
	M10	10.0	1.5	41	4.2	30	48	4.9	35
			1.25	43	4.4	32	51	5.2	38
	M12	12.0	1.75	71	7.2	52	84	8.6	62
			1.25	77	7.9	57	92	9.4	68
	M14	14.0	1.5	127	13.0	94	147	15.0	108
9T	M6	6.0	1.0	12	1.2	9	15	1.5	11
	M8	8.0	1.25	29	3.0	22	35	3.6	26
			1.0	31	3.2	23	37	3.8	27
	M10	10.0	1.5	59	6.0	43	70	7.1	51
			1.25	62	6.3	46	74	7.5	54
	M12	12.0	1.75	98	10.0	72	118	12.0	87
			1.25	108	11.0	80	137	14.0	101
	M14	14.0	1.5	177	18.0	130	206	21.0	152

1. **Special parts are excluded.**
2. **This standard is applicable to bolts having the following marks embossed on the bolt head.**

*: Nominal diameter

Grade	Mark
4T	4
7T	7
9T	9

M 6
Nominal diameter of bolt threads (Unit: mm)
Metric screw threads

SAE J1930 Terminology List

All emission related terms used in this publication in accordance with SAE J1930 are listed. Accordingly, new terms, new acronyms/abbreviations and old terms are listed in the following chart.

***: Not applicable

NEW TERM	NEW ACRONYM / ABBREVIATION	OLD TERM
Air cleaner	ACL	Air cleaner
Barometric pressure	BARO	***
Barometric pressure sensor-BCDD	BAROS-BCDD	BCDD
Camshaft position	CMP	***
Camshaft position sensor	CMPS	Crank angle sensor
Carburetor	CARB	Carburetor
Charge air cooler	CAC	Intercooler
Closed loop	CL	Closed loop
Closed throttle position switch	CTP switch	Idle switch
Clutch pedal position switch	CPP switch	Clutch switch
Continuous fuel injection system	CFI system	***
Continuous trap oxidizer system	CTOX system	***
Crankshaft position	CKP	***
Crankshaft position sensor	CKPS	***
Data link connector	DLC	***
Data link connector for CONSULT	DLC for CONSULT	Diagnostic connector for CONSULT
Diagnostic test mode	DTM	Diagnostic mode
Diagnostic test mode selector	DTM selector	Diagnostic mode selector
Diagnostic test mode I	DTM I	Mode I
Diagnostic test mode II	DTM II	Mode II
Diagnostic trouble code	DTC	Malfunction code
Direct fuel injection system	DFI system	***
Distributor ignition system	DI system	Ignition timing control
Early fuel evaporation-mixture heater	EFE-mixture heater	Mixture heater
Early fuel evaporation system	EFE system	Mixture heater control
Electrically erasable programmable read only memory	EEPROM	***
Electronic ignition system	EI system	Ignition timing control
Engine control module	ECM	ECCS control unit
Engine coolant temperature	ECT	Engine temperature
Engine coolant temperature sensor	ECTS	Engine temperature sensor
Engine modification	EM	***
Engine speed	RPM	Engine speed
Erasable programmable read only memory	EPROM	***
Evaporative emission system	EVAP system	Evaporative emission control system
Exhaust gas recirculation valve	EGR valve	EGR valve

SAE J1930 Terminology List (Cont'd)

***: Not applicable

NEW TERM	NEW ACRONYM / ABBREVIATION	OLD TERM
Exhaust gas recirculation control-BPT valve	EGRC-BPT valve	BPT valve
Exhaust gas recirculation control-solenoid valve	EGRC-solenoid valve	EGR control solenoid valve
Exhaust gas recirculation temperature sensor	EGR temperature sensor	Exhaust gas temperature sensor
Flash electrically erasable programmable read only memory	FEEPROM	***
Flash erasable programmable read only memory	FEPROM	***
Flexible fuel sensor	FFS	***
Flexible fuel system	FF system	***
Heated Oxygen sensor	HO2S	Exhaust gas sensor
Idle air control system	IAC system	Idle speed control
Idle air control valve-air regulator	IACV-air regulator	Air regulator
Idle air control valve-auxiliary air control valve	IACV-AAC valve	Auxiliary air control (AAC) valve
Idle air control valve-FICD solenoid valve	IACV-FICD solenoid valve	FICD solenoid valve
Idle air control valve-idle up control solenoid valve	IACV-idle up control solenoid valve	Idle up control solenoid valve
Idle speed control-FI pot	ISC-FI pot	FI pot
Idle speed control system	ISC system	***
Ignition control module	ICM	***
Indirect fuel injection system	IFI system	***
Intake air temperature sensor	IATS	Air temperature sensor
Knock	***	Detonation
Knock sensor	KS	Detonation sensor
Malfunction indicator lamp	MIL	Check engine light
Manifold absolute pressure	MAP	***
Manifold absolute pressure sensor	MAPS	***
Manifold differential pressure	MDP	***
Manifold differential pressure sensor	MDPS	***
Manifold surface temperature	MST	***
Manifold surface temperature sensor	MSTS	***
Manifold vacuum zone	MVZ	***
Manifold vacuum zone sensor	MVZS	***
Mass air flow sensor	MAFS	Air flow meter
Mixture control solenoid valve	MC solenoid valve	Air-fuel ratio control solenoid valve
Multiport fuel injection System	MFI system	Fuel injection control
Neutral position switch	***	Neutral switch
Non-volatile random access memory	NVRAM	***
On-board diagnostic system	OBD system	Self-diagnosis
Open loop	OL	Open loop
Oxidation catalyst	OC	Catalyst

SAE J1930 Terminology List (Cont'd)

***: Not applicable

NEW TERM	NEW ACRONYM / ABBREVIATION	OLD TERM
Oxidation catalytic converter system	OC system	***
Oxygen sensor	O2S	Exhaust gas sensor
Park position switch	***	Park switch
Park/neutral position switch	PNP switch	Park/neutral switch
Periodic trap oxidizer system	PTOX system	***
Powertrain control module	PCM	***
Programmable read only memory	PROM	***
Pulsed secondary air injection control solenoid valve	PAIRC solenoid valve	AIV control solenoid valve
Pulsed secondary air injection system	PAIR system	Air induction valve(AIV) control
Pulsed secondary air injection valve	PAIR valve	Air induction valve
Random access memory	RAM	***
Read only memory	ROM	***
Scan tool	ST	***
Secondary air injection pump	AIR pump	***
Secondary air injection system	AIR system	***
Sequential multiport fuel injection system	SFI system	Sequential fuel injection
Service reminder indicator	SRI	***
Simultaneous multiport fuel injection system	***	Simultaneous fuel injection
Smoke puff limiter system	SPL system	***
Supercharger	SC	***
Supercharger bypass	SCB	***
System readiness test	SRT	***
Thermal vacuum valve	TVV	Thermal vacuum valve
Three way catalyst	TWC	Catalyst
Three way catalytic converter system	TWC system	***
Three way + oxidation catalyst	TWC + OC	Catalyst
Three way + oxidation catalytic converter system	TWC + OC system	***
Throttle body	TB	Throttle chamber SPI body
Throttle body fuel injection system	TBI system	Fuel injection control
Throttle position	TP	Throttle position
Throttle position sensor	TPS	Throttle sensor
Throttle position switch	TP switch	Throttle switch
Torque converter clutch solenoid valve	TCC solenoid valve	Lock-up cancel solenoid Lock-up solenoid
Turbocharger	TC	Turbocharger
Vehicle speed sensor	VSS	Vehicle speed sensor
Volume air flow sensor	VAFS	Air flow meter

SAE J1930 Terminology List (Cont'd)

***: Not applicable

NEW TERM	NEW ACRONYM / ABBREVIATION	OLD TERM
Warm up oxidation catalyst	WU-OC	Catalyst
Warm up oxidation catalytic converter system	WU-OC system	***
Warm up three-way catalyst	WU-TWC	Catalyst
Warm up three-way catalytic converter system	WU-TWC system	***
Wide open throttle position switch	WOTP switch	Full switch

ENGINE MECHANICAL

SECTION **EM**

CONTENTS

PRECAUTIONS 2
- Supplemental Restraint System (SRS) "AIR BAG" and "SEAT BELT PRE-TENSIONER" 2
- Parts Requiring Angular Tightening 2
- Liquid Gasket Application Procedure 2
- Special Cautions to Ensure the Safe Disposal of Sodium-filled Exhaust Valves 3

PREPARATION 5
- Special Service Tools 5
- Commercial Service Tools 8

OUTER COMPONENT PARTS 9

COMPRESSION PRESSURE 12
- Measurement of Compression Pressure 12

OIL PAN 13
- Removal 13
- Installation 16

TIMING CHAIN 19
- Removal 20
- Inspection 23
- Installation 24

OIL SEAL REPLACEMENT 32

INTAKE MANIFOLD 35
- Removal 35
- Installation 36

CYLINDER HEAD 38
- Removal and Installation 39
- Disassembly 39
- Inspection 40
- Assembly 46

TURBOCHARGER 49
- Removal 49
- Disassembly 50
- Inspection 51
- Assembly 53
- Installation 53

ENGINE REMOVAL 55
- Removal 56
- Installation 56

CYLINDER BLOCK 57
- Disassembly 58
- Inspection 59
- Assembly 67

SERVICE DATA AND SPECIFICATIONS (SDS) 72
- General Specifications 72
- Inspection and Adjustment 73

Supplemental Restraint System (SRS) "AIR BAG" and "SEAT BELT PRE-TENSIONER"

The Supplemental Restraint System "Air Bag" and "Seat Belt Pre-tensioner", used along with a seat belt, help to reduce the risk or severity of injury to the driver and front passenger in a frontal collision. The Supplemental Restraint System consists of air bag modules (located in the center of the steering wheel and on the instrument panel on the passenger side), seat belt pre-tensioners, a diagnosis sensor unit, warning lamp, wiring harness and spiral cable. Information necessary to service the system safely is included in the **RS section** of this Service Manual.

WARNING:

- **To avoid rendering the SRS inoperative, which could increase the risk of personal injury or death in the event of a collision which would result in air bag inflation, all maintenance must be performed by an authorized NISSAN dealer.**
- **Improper maintenance, including incorrect removal and installation of the SRS, can lead to personal injury caused by unintentional activation of the system.**
- **All SRS air bag electrical wiring harnesses and connectors are covered with yellow outer insulation. Do not use electrical test equipment on any circuit related to the SRS.**

Parts Requiring Angular Tightening

Use an angle wrench for the final tightening of the following engine parts:

- Cylinder head bolts
- Main bearing cap bolts
- Connecting rod bearing cap nuts

Do not use a torque value for final tightening.

The torque values for these parts are for a preliminary step. Ensure thread and seat surfaces are clean and coated with engine oil.

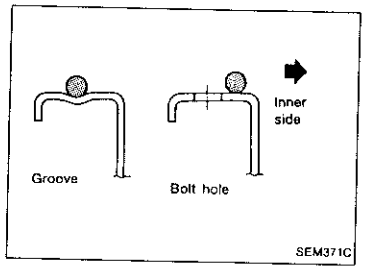

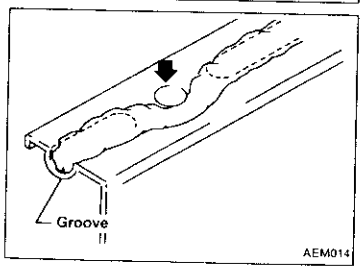

Liquid Gasket Application Procedure

a. **Use a scraper to remove all traces of old liquid gasket from mating surfaces and grooves. Also, completely clean any oil from these areas.**

b. **Apply a continuous bead of liquid gasket to mating surfaces. (Use Genuine Liquid Gasket or equivalent.)**
   - **Be sure liquid gasket is 4.0 to 5.0 mm (0.157 to 0.197 in) wide (for oil pan).**
   - **Be sure liquid gasket is 2.0 to 3.0 mm (0.079 to 0.118 in) wide (in areas except oil pan).**

c. **Apply liquid gasket to inner surface around hole perimeter area.**
   (Assembly should be done within 5 minutes after coating.)

d. **Wait at least 30 minutes before refilling engine oil and engine coolant.**

Special Cautions to Ensure the Safe Disposal of Sodium-filled Exhaust Valves

The handling and disposal of sodium-filled exhaust valves requires special care and consideration. Under conditions such as breakage with subsequent exposure to water, the sodium metal will react violently. The sodium metal, which lines the inner portion of the exhaust valve, forms sodium hydroxide. Also, it releases hydrogen gas which may result in an explosion or fire.

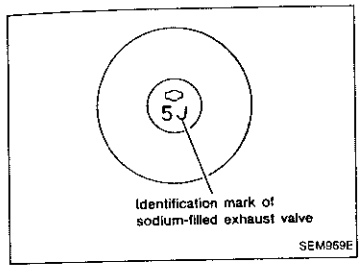

A sodium-filled exhaust valve is identified on the top of its stem as shown in illustration.

DEALER DISPOSAL INSTRUCTIONS

CAUTION:

- **Use approved shatter-resistant eye protection when performing this procedure.**
- **Perform this and all subsequent disposal work procedures in an open room, away from flammable liquids. Keep a fire extinguisher, rated at least 10 ABC, in close proximity to the work area.**
- **Be sure to wear rubber gloves when performing the following operations.**

1. Clamp valve stem in a vice.
2. The valve has a specially-hardened surface. To cut through it, first remove a half-round section, approximately 30 mm (1.18 in) long. Use an air-powered grinder until the black iron color is removed and the silver-colored metal appears.

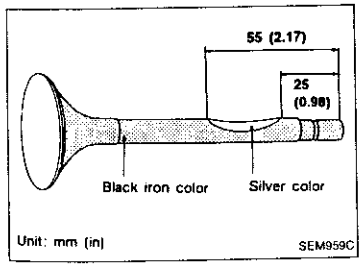

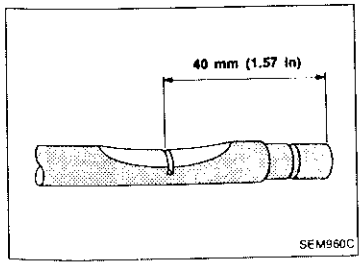

3. Use a hacksaw to cut through approximately half the diameter of the valve stem. Make the serration at a point 40 mm (1.57 in) from the end of the stem.

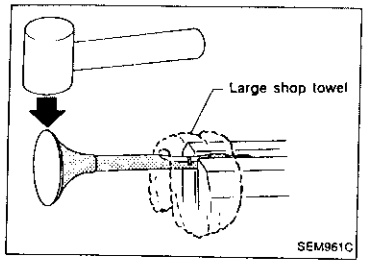

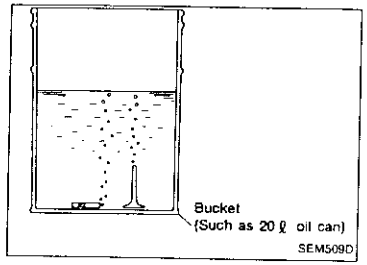

Special Cautions to Ensure the Safe Disposal of Sodium-filled Exhaust Valves (Cont'd)

4. Cover the serrated end of the valve with a large shop towel. Strike the valve face end with a hammer, separating it into two pieces.

5. Fill a bucket (such as a 20 ℓ oil can) with at least 10 ℓ (2-1/4 Imp gal) of water. Using a pair of large tweezers, carefully place the already-cut (serrated) valves into the water one at a time. Quickly move away at least 2.7 m (9 ft). Place the valves in a standing position as shown in the figure. This allows complete reaction of the sodium with the water. The major portion of the resultant chemical reaction lasts 1 to 2 minutes. After the bubbling action has subsided, additional valves can be placed into the water. Wait until each subsequent chemical reaction subsides before placing additional valves into the water. However, no more than 8 valves should be placed in the same 10 ℓ (2-1/4 Imp gal) amount of water. The complete chemical reaction may take as long as 4 to 5 hours. Remove the valves using a set of large tweezers after the chemical reaction has stopped. Afterwards, the valves can be mixed with ordinary scrap metal.

CAUTION:

- **Make sure the resultant (high alkalinity) waste water does not contact your skin. If the waste water does contact you, wash the contacted area immediately with large quantities of water.**
- **Check country and local regulations concerning any chemical treatment or waste water discharge permits. These may be required to dispose of the resultant (high alkalinity) waste water.**

Special Service Tools

Tool number Tool name	Description
ST0501S000 Engine stand assembly ① ST05011000 Engine stand ② ST05012000 Base	Disassembling and assembling 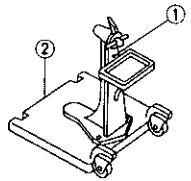 NT042
KV10106500 Engine stand shaft	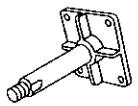 NT028
KV10115300 Engine sub-attachment	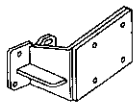 NT008
ST10120000 Cylinder head bolt wrench	Loosening and tightening cylinder head bolt **a: 13 (0.51) dia.** **b: 12 (0.47)** **c: 10 (0.39)** Unit: mm (in) 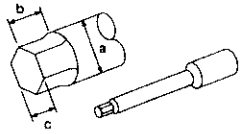 NT583
KV10116200 Valve spring compressor ① KV10115900 Attachment	Disassembling valve mechanism 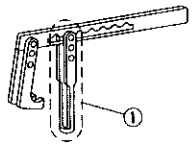 NT022
KV101092S0 Valve spring compressor ① KV10109210 Compressor ② KV10109220 Adapter ③ KV10111200 Adapter (Useless)	Disassembling valve mechanism 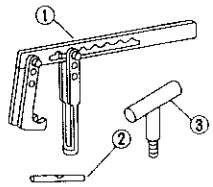 NT586

Special Service Tools (Cont'd)

*: Special tool or commercial equivalent

Tool number Tool name	Description
KV10115600 Valve oil seal drift	Installing valve oil seal 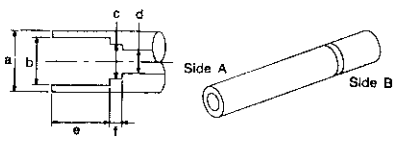 NT603 Unit: mm (in) Intake: Side A / Exhaust: Side B Side A: a: 20 (0.79) dia. b: 13 (0.51) dia. c: 10.3 (0.406) dia. d: 8 (0.31) dia. e: 10.7 (0.421) f: 5 (0.20) Side B: a: 20 (0.79) dia. b: 14.2 (0.559) dia. c: 11 (0.43) dia. d: 8 (0.31) dia. e: 10.7 (0.421) dia. f: 5 (0.20)
KV10115700 Dial gauge stand	Adjusting shims 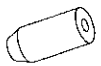 NT012
EM03470000 Piston ring compressor	Installing piston assembly into cylinder bore 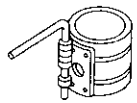 NT044
KV10107400 Piston pin press stand ① KV10107310 Center shaft ② ST13040020 Stand ③ ST13040030 Spring ④ KV10107320 Cap ⑤ ST13040050 Drift	Disassembling and assembling piston pin 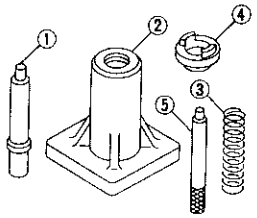 NT013
ED19600000* Compression gauge set	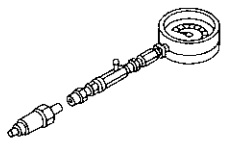 NT626
KV10111100 Seal cutter	Removing oil pan 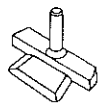 NT046

Special Service Tools (Cont'd)

Tool number Tool name	Description
WS39930000 Tube presser	Pressing the tube of liquid gasket 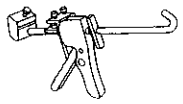 NT052
KV10112100 Angle wrench	Tightening bolts for bearing cap, cylinder head, etc. 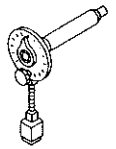 NT014
ST16610001 Pilot bushing puller	Removing pilot bushing 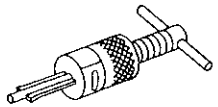 NT045

SEC. 111•118•140•147•148•150•163•164
SEC. 220•223•226

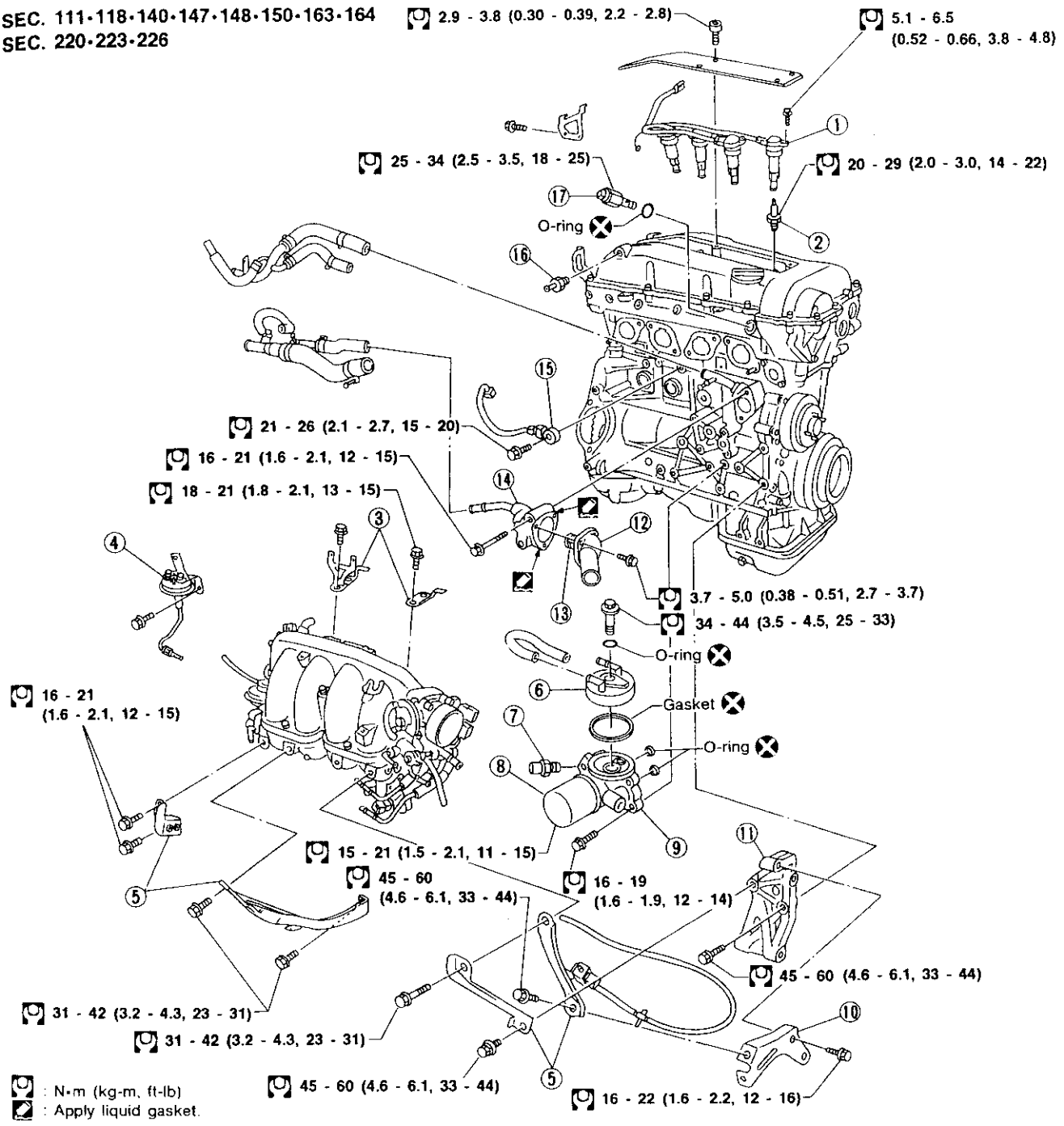

SEM970E

① Ignition coil
② Spark plug
③ Intake manifold collector support
④ EGRC-BPT valve
⑤ Intake manifold support
⑥ Oil cooler
⑦ Oil pressure switch
⑧ Oil filter
⑨ Oil filter bracket
⑩ Alternator adjusting bar
⑪ Alternator bracket
⑫ Water outlet
⑬ Thermostat
⑭ Thermostat housing
⑮ Knock sensor
⑯ Blow-by control valve
⑰ VTC solenoid valve

Commercial Service Tools

Tool name	Description	
Spark plug wrench	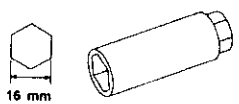 NT047	Removing and installing spark plug
Valve seat cutter set	NT048	Finishing valve seat dimensions
Piston ring expander	NT030	Removing and installing piston ring
Valve guide drift	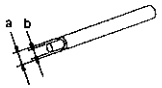 NT015	Removing and installing valve guide **Intake** a = 9.5 mm (0.374 in) dia. b = 5.0 mm (0.197 in) dia. **Exhaust** a = 10.5 mm (0.413 in) dia. b = 6.0 mm (0.236 in) dia.
Valve guide reamer	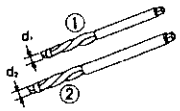 NT016	Reaming valve guide ① or hole for oversize valve guide ② Unit: mm (in)
Front oil seal drift	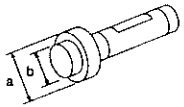 NT049	Installing front oil seal a = 75 mm (2.95 in) dia. b = 45 mm (1.77 in) dia.
Rear oil seal drift	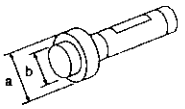 NT049	Installing rear oil seal a = 110 mm (4.33 in) dia. b = 80 mm (3.15 in) dia.

	d_1	d_2
Intake	6.0 (0.236)	10.175 (0.4006)
Exhaust	7.0 (0.276)	11.175 (0.4400)

SEC. 111·118·140·147·148·150·163·164
SEC. 220·223·226

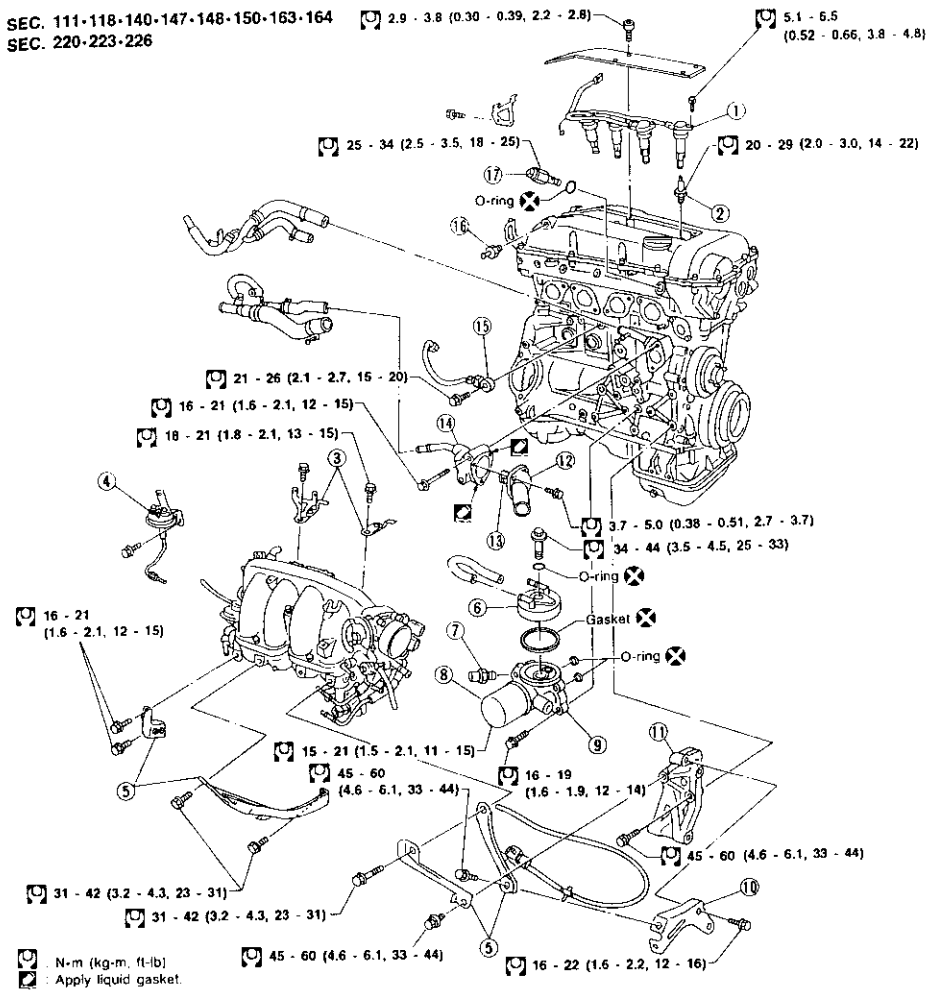

SEM970E

① Ignition coil
② Spark plug
③ Intake manifold collector support
④ EGRC-BPT valve
⑤ Intake manifold support
⑥ Oil cooler
⑦ Oil pressure switch
⑧ Oil filter
⑨ Oil filter bracket
⑩ Alternator adjusting bar
⑪ Alternator bracket
⑫ Water outlet
⑬ Thermostat
⑭ Thermostat housing
⑮ Knock sensor
⑯ Blow-by control valve
⑰ VTC solenoid valve

SEC. 118•140•223

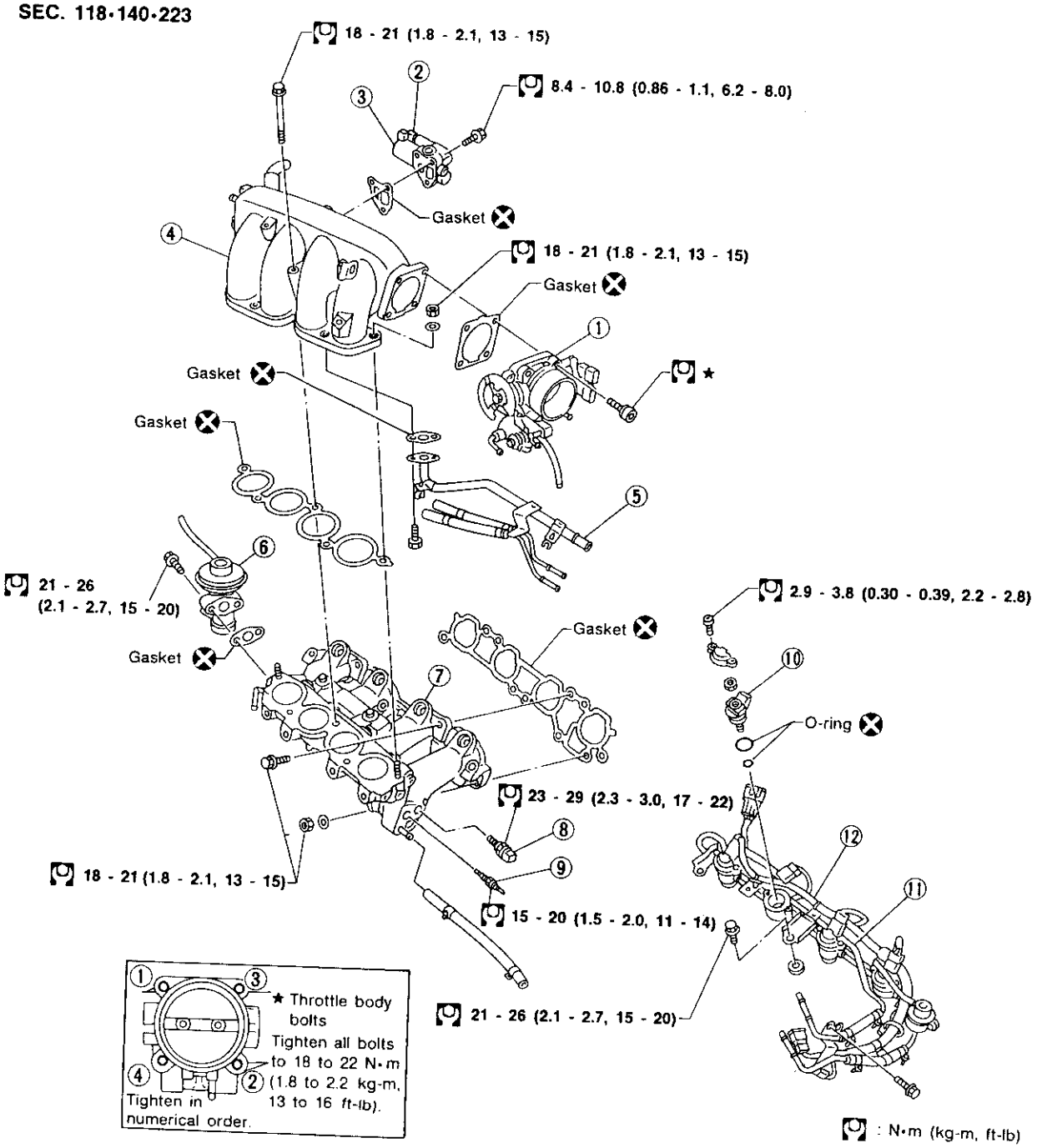

SEM971E

① Throttle body
② IACV-FICD valve
③ IACV-AAC valve
④ Intake manifold collector
⑤ Air pipe
⑥ EGR valve
⑦ Intake manifold
⑧ Engine coolant temperature sensor
⑨ Thermal transmitter
⑩ Injector
⑪ Fuel tube assembly
⑫ Injector harness

SEC. 140•144•226

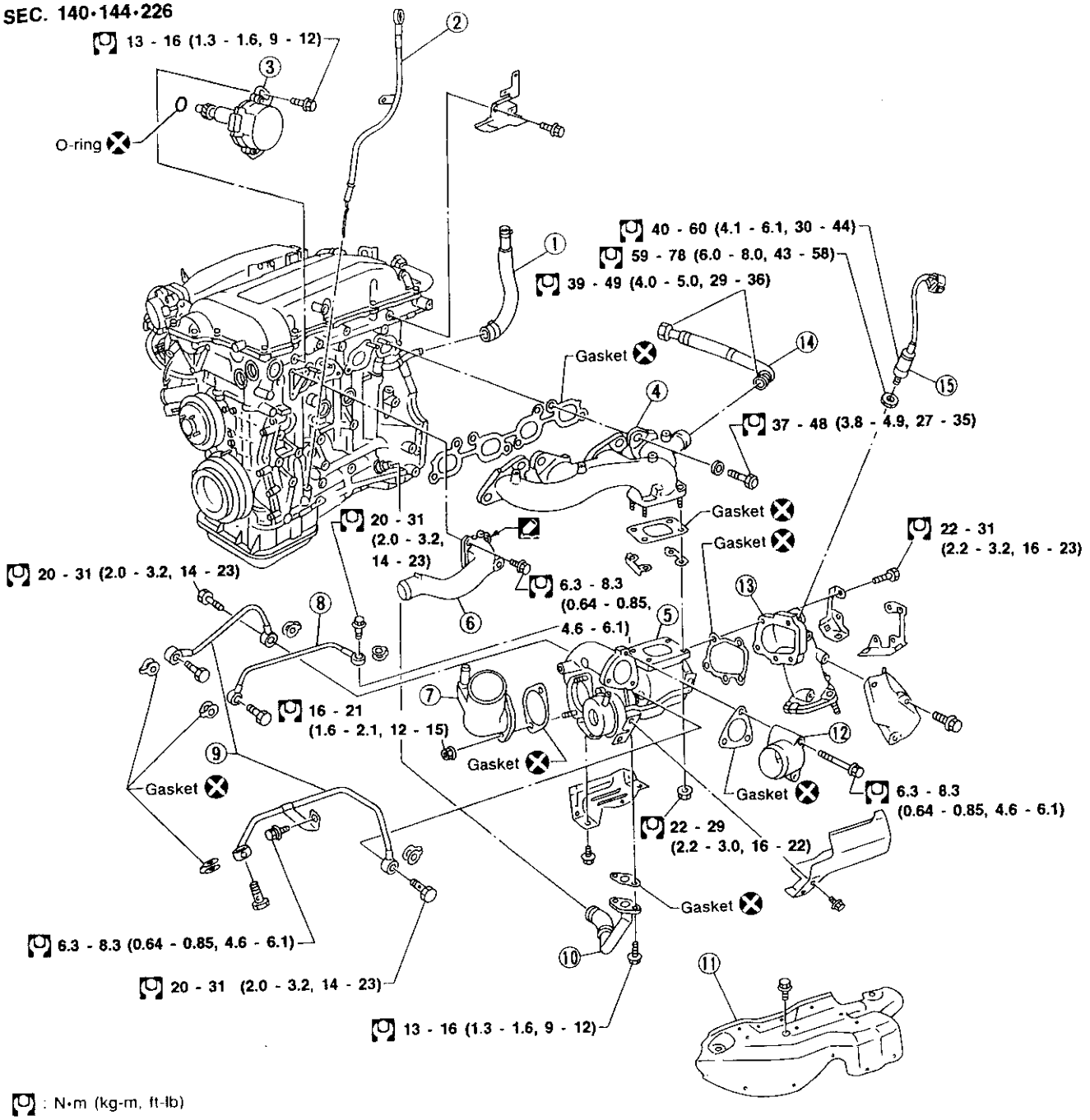

: N•m (kg-m, ft-lb)
: Apply liquid gasket.

SEM972E

① Blow-by hose
② Oil level gauge
③ Camshaft position sensor
④ Exhaust manifold
⑤ Turbocharger
⑥ Water outlet
⑦ Air inlet
⑧ Oil tube
⑨ Water tube
⑩ Oil return pipe
⑪ Exhaust manifold cover
⑫ Air outlet
⑬ Exhaust manifold outlet
⑭ EGR pipe
⑮ Heated oxygen sensor

Measurement of Compression Pressure

1. Warm up engine.
2. Turn ignition switch off.
3. Release fuel pressure.
   Refer to "Releasing Fuel Pressure" in EC section.
4. Remove all spark plugs.
5. Disconnect distributor center cable.

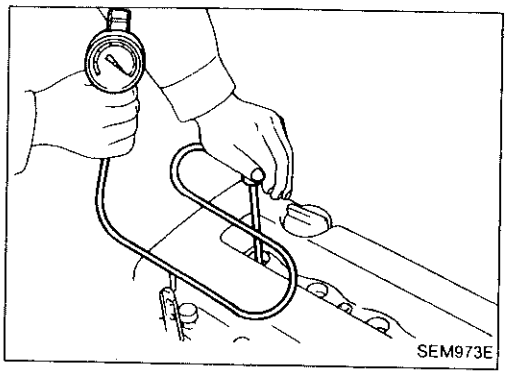
SEM973E

20 mm (0.79 in) dia.

Use compressor tester whose end (rubber portion) is less than 20 mm (0.79 in) dia. Otherwise, it may be caught by cylinder head during removal.

SEM387C

6. Attach a compression tester to No. 1 cylinder.
7. Depress accelerator pedal fully to keep throttle valve wide open.
8. Crank engine and record highest gauge indication.
9. Repeat the measurement on each cylinder as shown above.

- **Always use a fully-charged battery to obtain specified engine revolution.**

Compression pressure:

Unit: kPa (bar, kg/cm^2, psi)/300 rpm

Standard	1,079 (10.79, 11.0, 156)
Minimum	883 (8.83, 9.0, 128)
Difference limit between cylinders	98 (0.98, 1.0, 14)

10. If compression in one or more cylinders is low:

a. Pour a small amount of engine oil into cylinders through spark plug holes.
b. Re-test compression.

- **If adding oil helps compression, piston rings may be worn or damaged. If so, replace piston rings after checking piston for wear or damage.**
- **If pressure stays low, a valve may be sticking or seating improperly. Inspect and repair valve and valve seat. (Refer to SDS.) If valve or valve seat is damaged excessively, replace them.**
- **If compression stays low in two cylinder that are next to each other:**

a. The cylinder head gasket may be leaking, or
b. Both cylinders may have valve component damage. Inspect and repair as necessary.

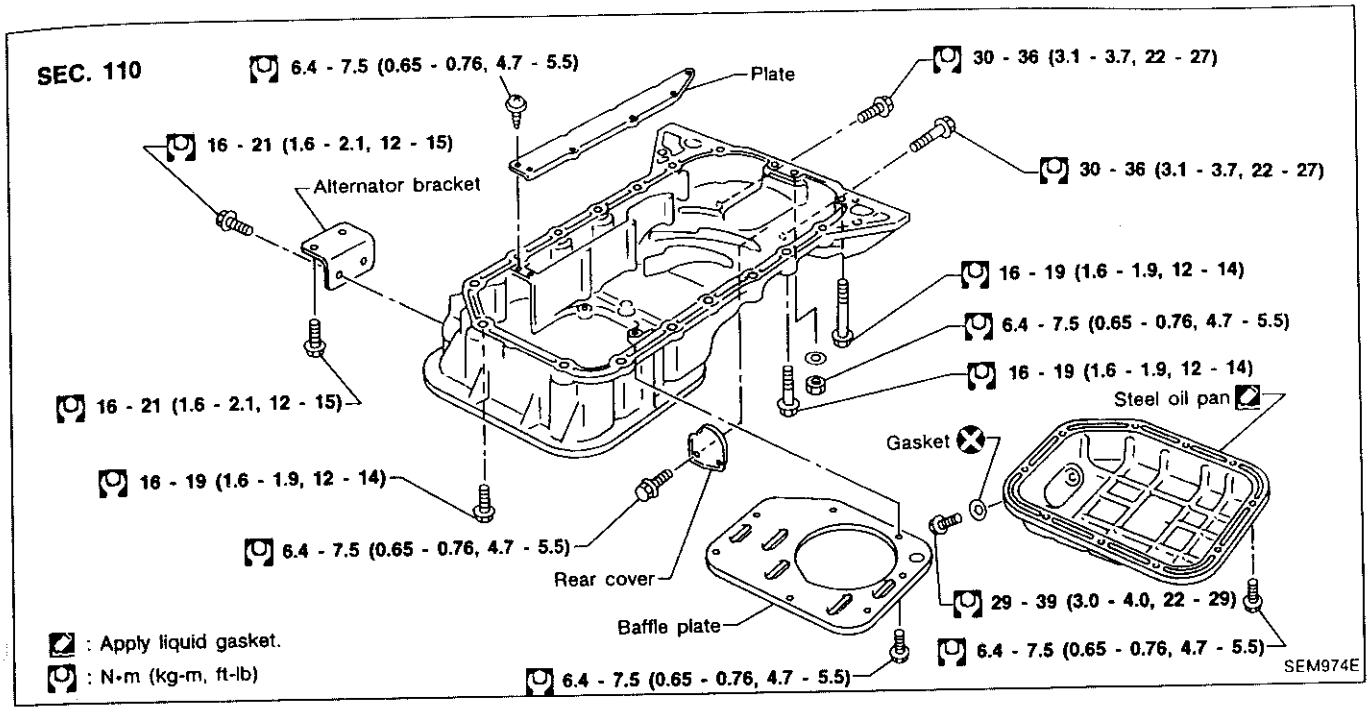

Removal

1. Remove engine under cover.
2. Drain engine oil.

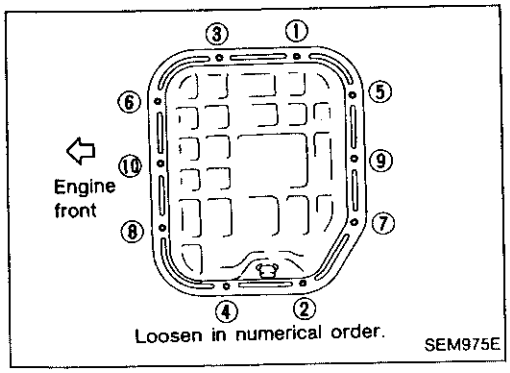

3. Remove steel oil pan bolts.

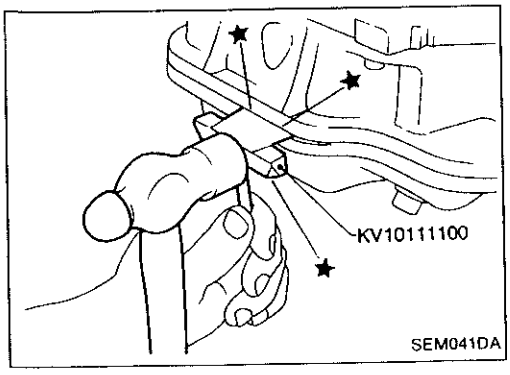

4. Remove steel oil pan.
(1) Insert Tool between aluminum oil pan and steel oil pan.

- **Be careful not to damage aluminum mating surface.**
- **Do not insert screwdriver, or oil pan flange will be deformed.**

Removal (Cont'd)

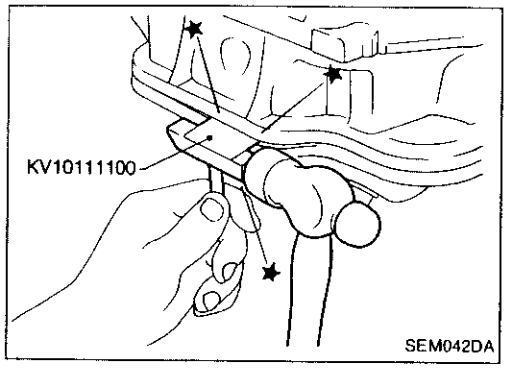

(2) Slide Tool by tapping on the side of the Tool with a hammer.

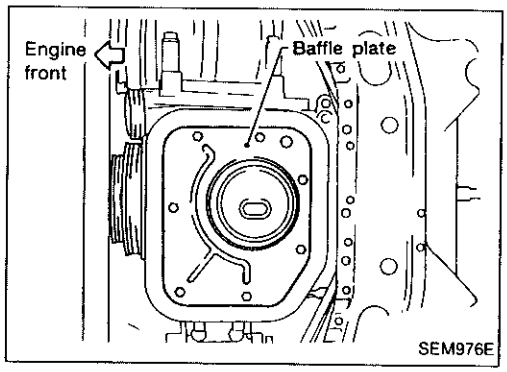

(3) Remove steel oil pan.
(4) Remove baffle plate.

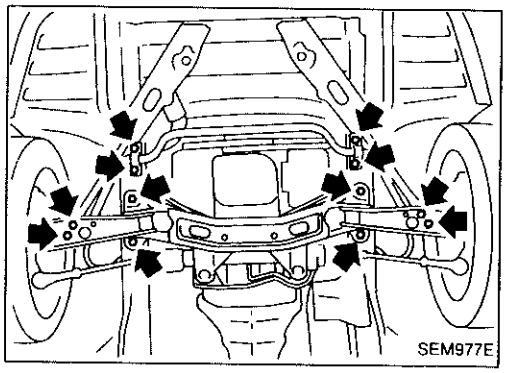

5. Install engine slingers to cylinder head. Refer to "ENGINE REMOVAL" (EM-55).
6. Set a suitable hoist on engine slinger and hold the engine.
7. Remove the following parts.
- Tension rod bolts at transverse links
- Front stabilizer bar securing bolts and nuts from side member.
- Both left and right side engine mounting bolts. Refer to "ENGINE REMOVAL" (EM-55).
8. Disconnect steering shaft lower joint.

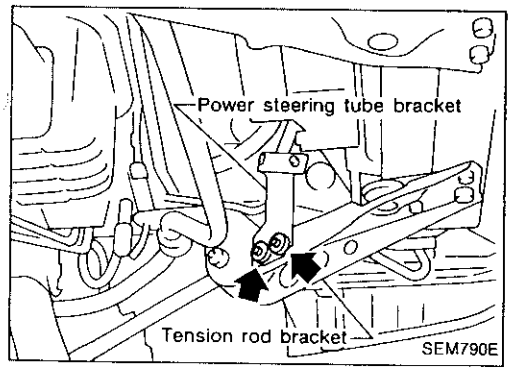

9. Remove power steering tube bracket securing bolts at left tension rod bracket.
10. Remove front suspension member securing bolts while supporting with a jack.
11. Lower front suspension member by around 60 mm (2.36 in).

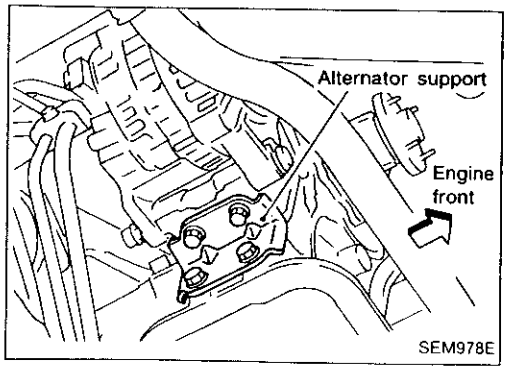

12. Remove alternator support.

Removal (Cont'd)

13. Remove rear cover plate.

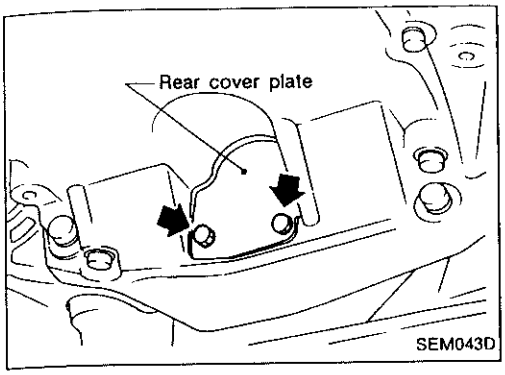

14. Remove aluminum oil pan bolts.

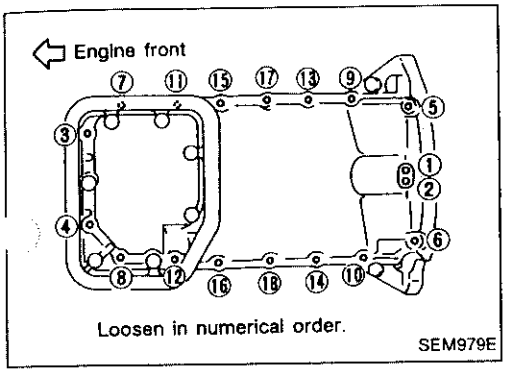

15. Remove four oil pan-to-transmission bolts.
16. Remove two engine-to-transmission bolts and install them into open bolt holes shown. Tighten the two bolts to release aluminum oil pan from cylinder block.

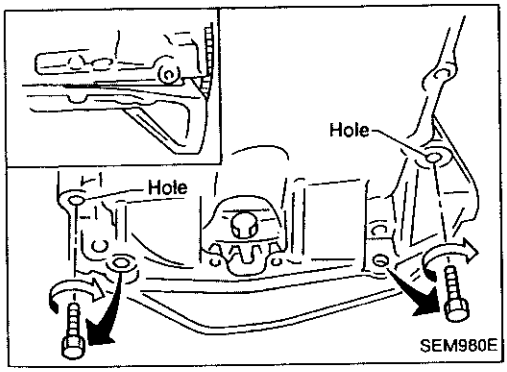

17. Remove aluminum oil pan.
(1) Insert Tool between cylinder block and aluminum oil pan.
- **Be careful not to damage aluminum mating surface.**
- **Do not insert screwdriver, or oil pan flange will be deformed.**

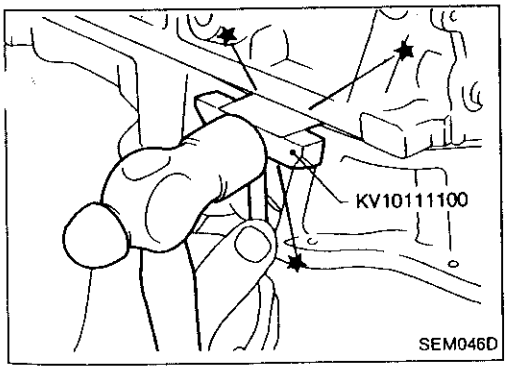

(2) Slide Tool by tapping on the side of the Tool with a hammer.

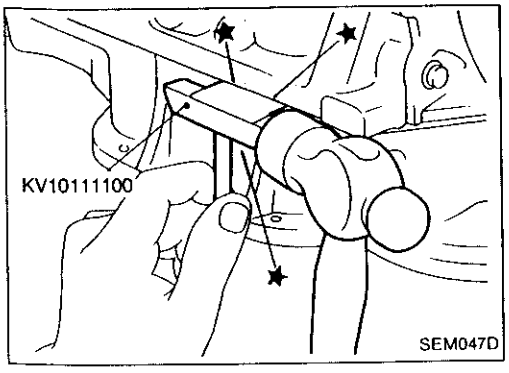

Removal (Cont'd)

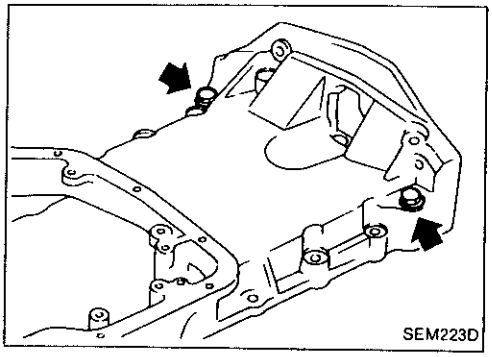

18. Remove the two oil pan-to-transmission bolts previously installed in aluminum oil pan.

Installation

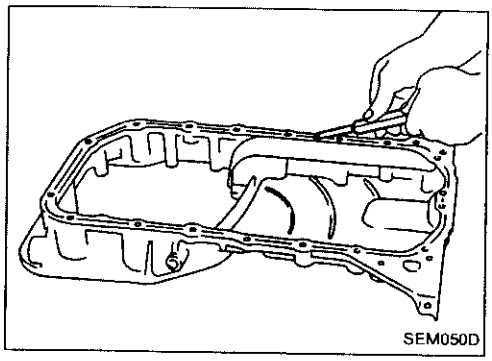

1. Install aluminum oil pan.

(1) Before installing aluminum oil pan, remove all traces of liquid gasket from mating surfaces using a scraper.

- Also remove traces of liquid gasket from mating surface of cylinder block and front cover.

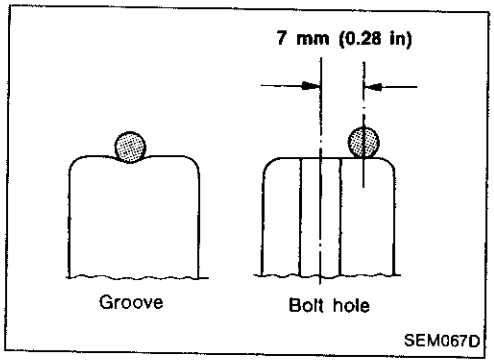

(2) Apply a continuous bead of liquid gasket to mating surface of aluminum oil pan.

- **Use Genuine Liquid Gasket or equivalent.**

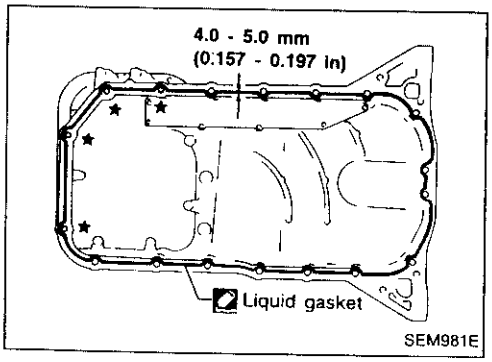

- **For areas marked with "★", apply liquid gasket to the outer side of the bolt hole.**

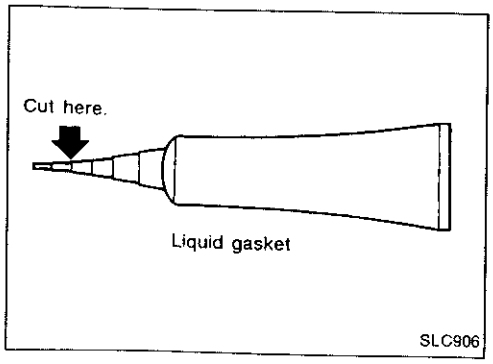

- **Be sure liquid gasket is 4.0 to 5.0 mm (0.157 to 0.197 in) wide.**
- **Attaching should be done within 5 minutes after coating.**

Installation (Cont'd)

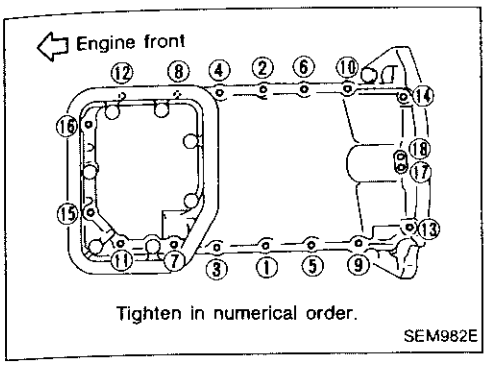

(3) Install aluminum oil pan.

- Tighten bolts in numerical order shown.

① - ⑯ **bolts:**

: 16 - 19 N·m (1.6 - 1.9 kg-m, 12 - 14 ft-lb)

⑰, ⑱ **bolts:**

: 6.4 - 7.5 N·m (0.65 - 0.76 kg-m, 4.7 - 5.5 ft-lb)

2. Install the four oil pan-to-transmission bolts.
3. Install rear cover plate.
4. Install alternator support.
5. Tighten front suspension member securing bolts.
6. Install all removed parts after removing steel oil pan.

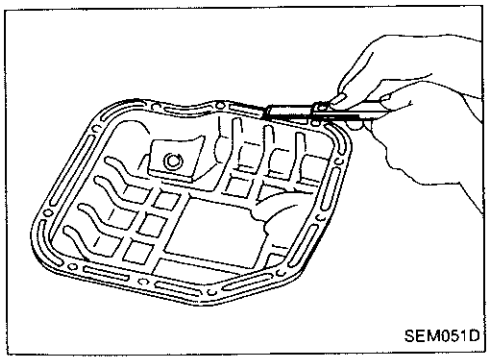

7. Install steel oil pan.

(1) Before installing steel oil pan, remove all traces of liquid gasket from mating surfaces using a scraper.

- Also remove traces of liquid gasket from mating surface of aluminum oil pan.

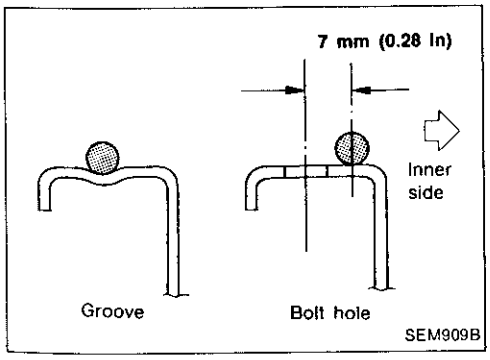

(2) Apply a continuous bead of liquid gasket to mating surface of steel oil pan.

- **Use Genuine Liquid Gasket or equivalent.**

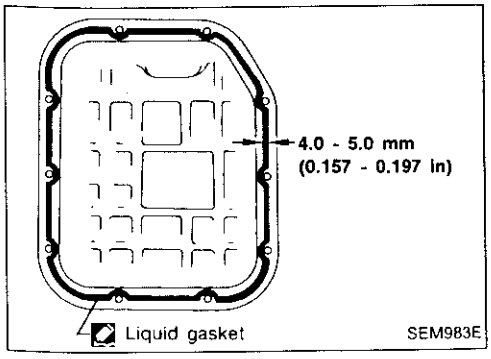

Installation (Cont'd)

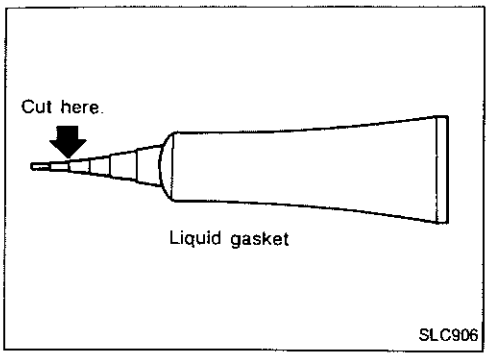

- **Be sure liquid gasket is 4.0 to 5.0 mm (0.157 to 0.197 in) wide.**
- **Attaching should be done within 5 minutes after coating.**

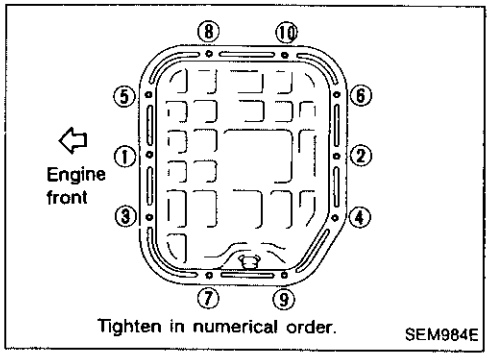

(3) Install steel oil pan.
- Install bolts in numerical order shown.
- Wait at least 30 minutes before refilling engine oil.

SEC. 120•130•135•210

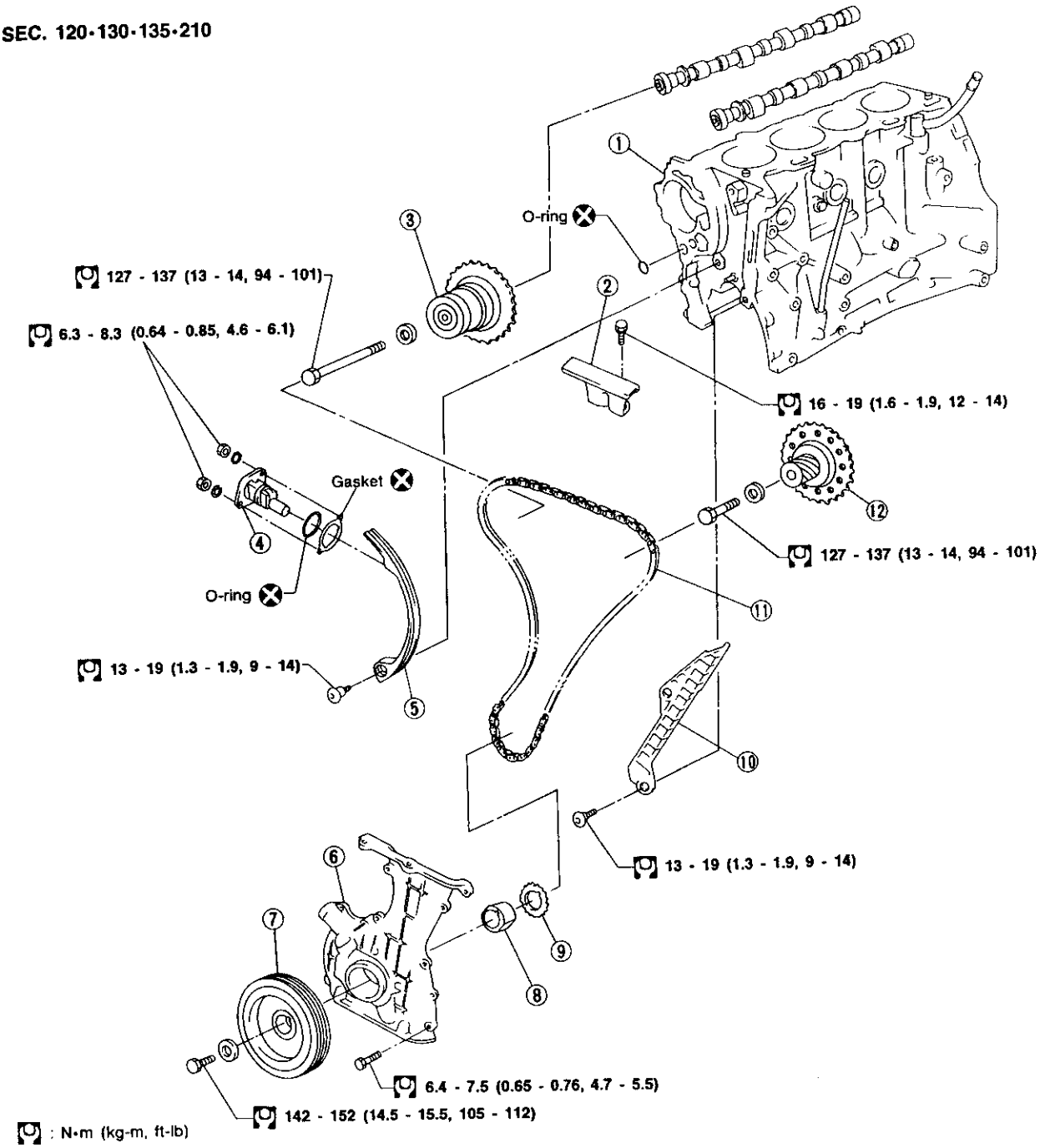

SEM985E

① Cylinder block
② Chain guide
③ RH camshaft sprocket
④ Chain tensioner
⑤ Chain guide
⑥ Front cover
⑦ Crank pulley
⑧ Oil pump spacer
⑨ Crankshaft sprocket
⑩ Chain guide
⑪ Timing chain
⑫ LH camshaft sprocket

Removal (Cont'd)

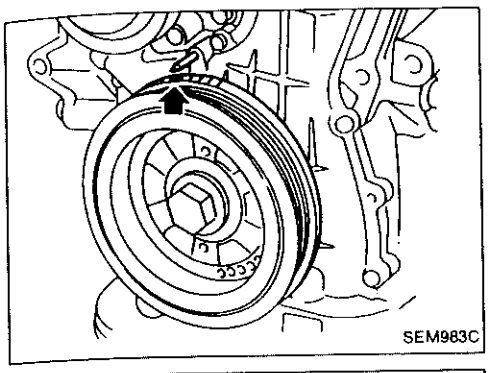

14. Set No. 1 piston at TDC on the compression stroke by rotating crankshaft.

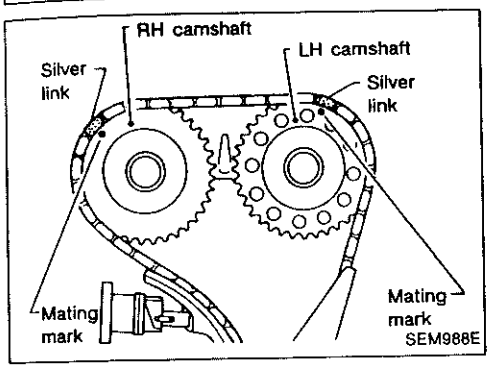

- **Rotate crankshaft until mating mark on camshaft sprocket is set at position indicated in figure at left.**

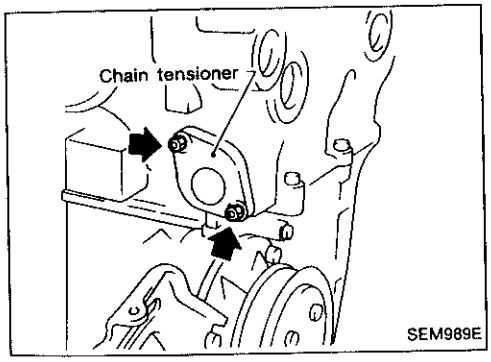

15. Remove chain tensioner.

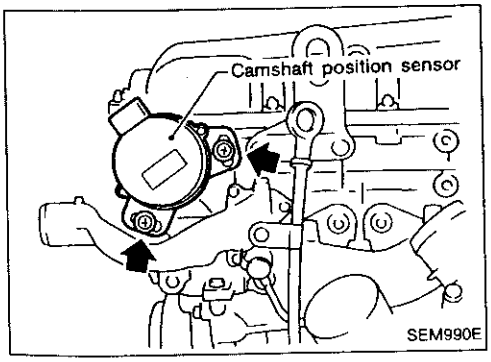

16. Remove camshaft position sensor.

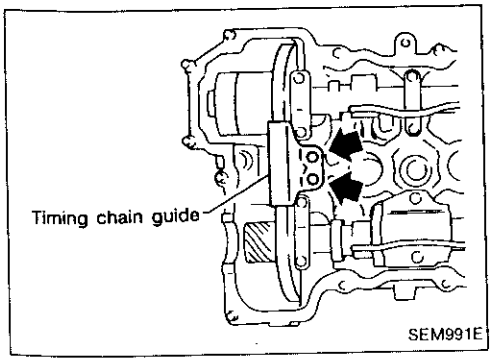

17. Remove timing chain guide.

CAUTION:

- **After removing timing chain, do not turn crankshaft and camshaft separately, or valves will strike piston heads.**
- **When installing rocker arms, camshafts, chain tensioner, oil seals, or other sliding parts, lubricate contacting surfaces with new engine oil.**
- **Apply new engine oil to bolt threads and seat surfaces when installing cylinder head, camshaft sprocket, crankshaft pulley, and camshaft brackets.**

Removal

1. Release fuel pressure.
   Refer to "Releasing Fuel Pressure" in EC section.
2. Remove engine under covers.
3. Drain coolant.
4. Remove radiator.
5. Remove air duct to intake manifold and air recirculation duct.
6. Remove PCV hoses from rocker cover.
7. Remove drive belts and water pump pulley.
8. Remove alternator.
9. Remove power steering oil pump.
10. Remove the following parts from cylinder head and intake manifold: vacuum hoses, fuel hoses, water hoses, wires, harness, connectors and so on.
11. Remove ignition coils and all spark plugs.

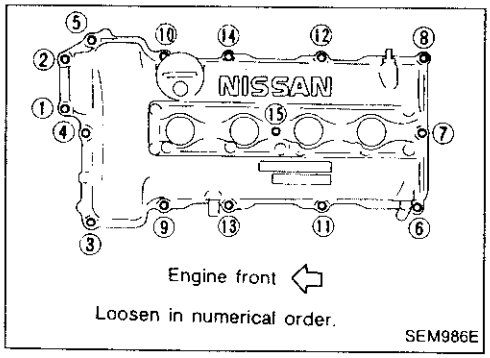

12. Remove rocker cover.

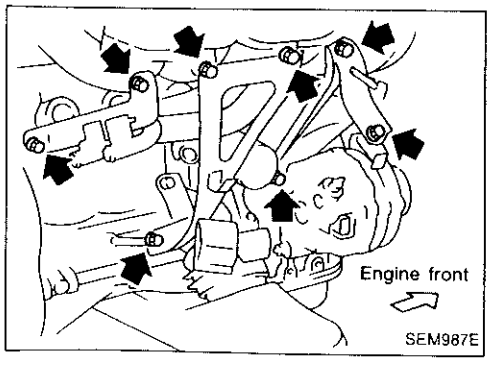

13. Remove intake manifold supports.

Removal (Cont'd)

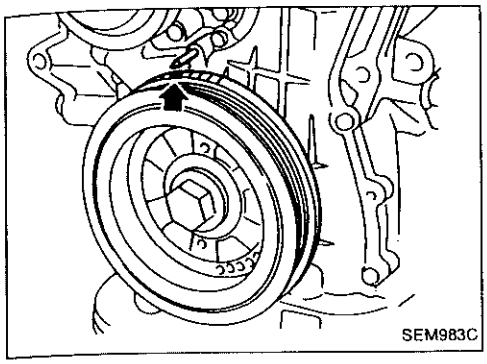

14. Set No. 1 piston at TDC on the compression stroke by rotating crankshaft.

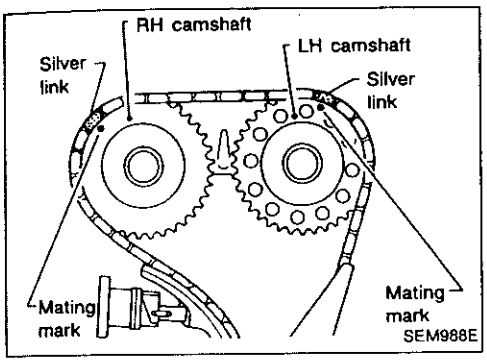

- **Rotate crankshaft until mating mark on camshaft sprocket is set at position indicated in figure at left.**

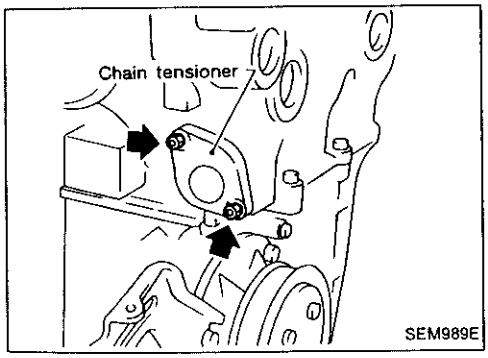

15. Remove chain tensioner.

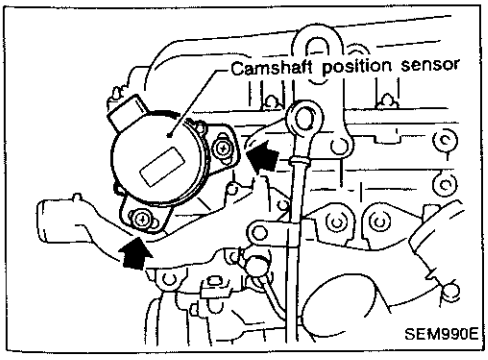

16. Remove camshaft position sensor.

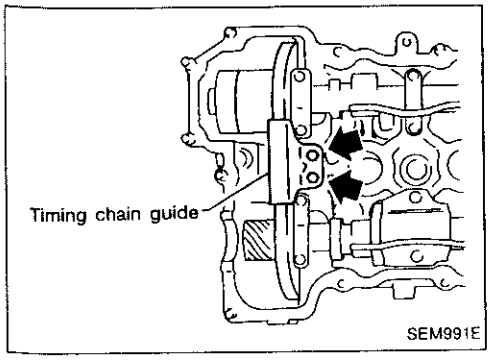

17. Remove timing chain guide.

Removal (Cont'd)

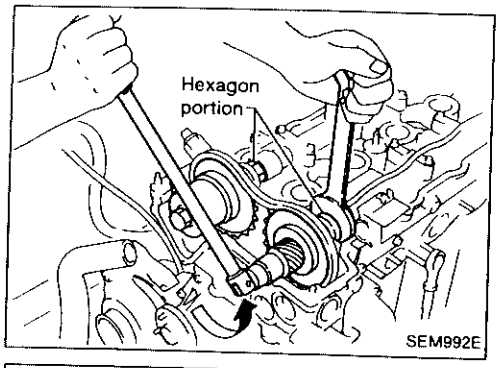

18. Remove camshaft sprockets.

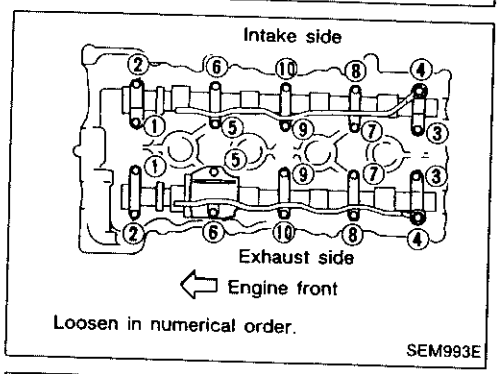

19. Remove camshafts, camshaft brackets, oil tubes and baffle plate.

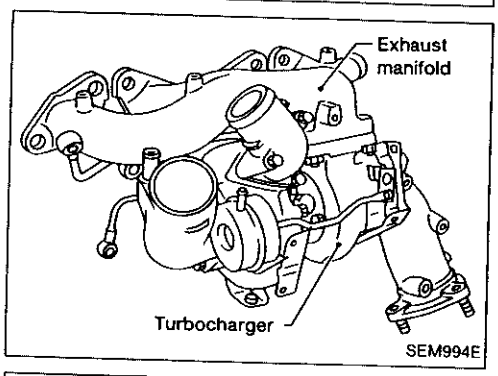

20. Remove exhaust manifold with turbocharger. Refer to "Removal" in "TURBOCHARGER" (EM-49).

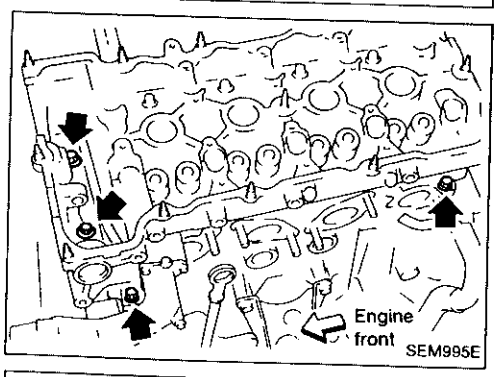

21. Remove cylinder head outside bolts and inside sub bolts.

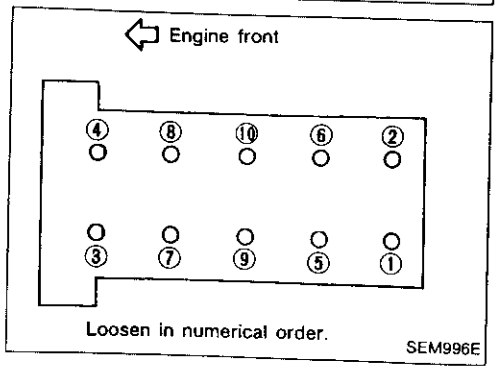

22. Remove cylinder head bolts.
- **A warped or cracked cylinder head may result from removing in incorrect order.**
- **Bolts should be loosened in two or three steps.**

23. Remove cylinder head with intake manifold.

Removal (Cont'd)

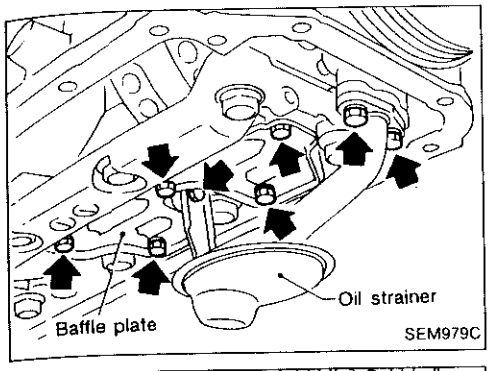

24. Remove oil pans.
    Refer to "Removal" in "OIL PAN" (EM-13).
25. Remove oil strainer and baffle plate.

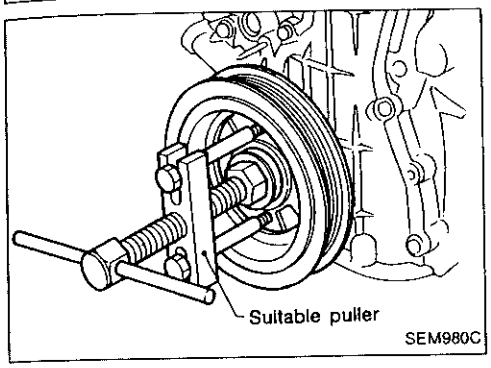

26. Remove crankshaft pulley.

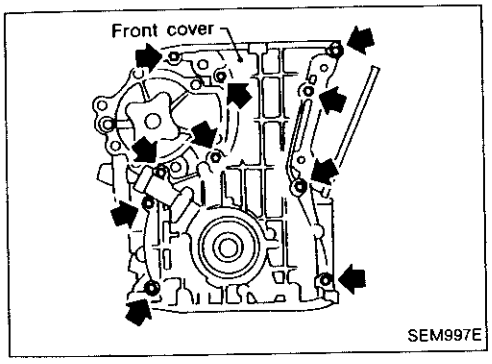

27. Remove front cover.

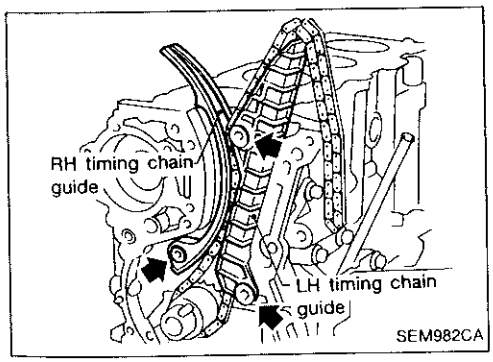

28. Remove timing chain guides and timing chain.

Inspection

Check for cracks and excessive wear at roller links. Replace chain if necessary.

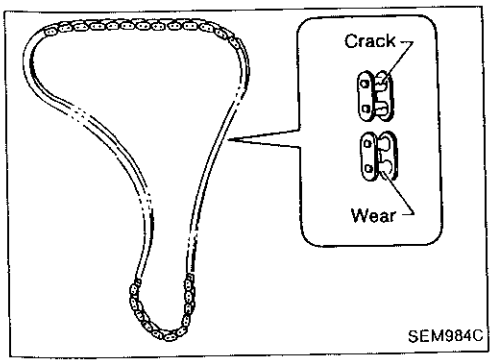

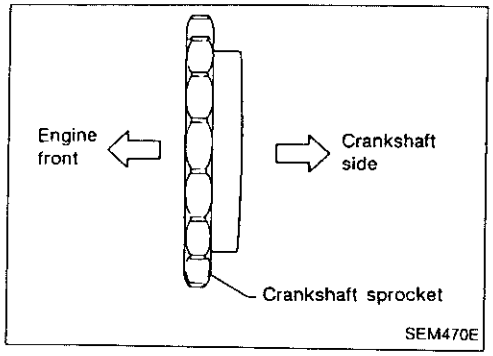

Installation

1. Install crankshaft sprocket on crankshaft.

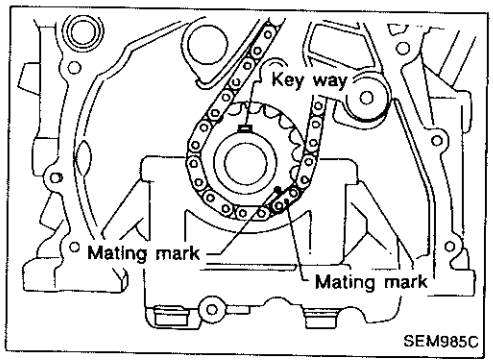

2. Position crankshaft so that No. 1 piston is set at TDC an key way is at 12 o'clock. Fit timing chain on cranksha sprocket, aligning the mating marks.

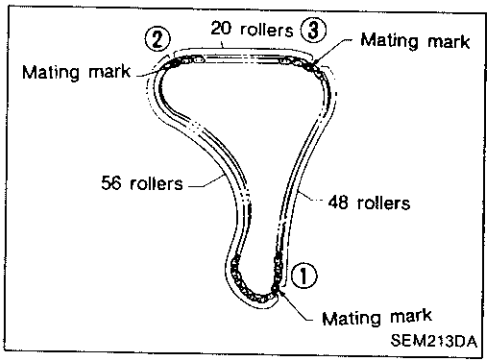

- Mating mark color on timing chain.
  ① : **Gold**
  ②, ③: **Silver**

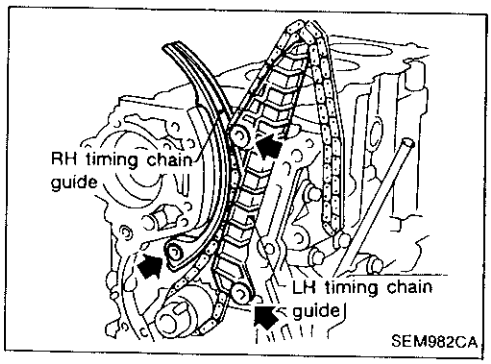

3. Install timing chain and timing chain guides.

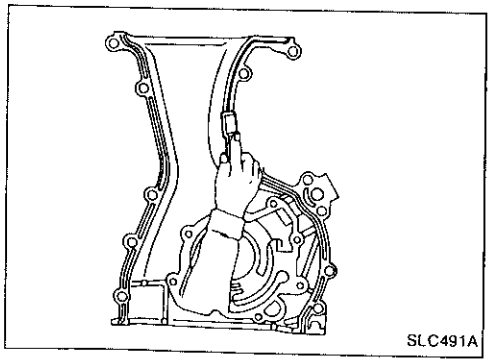

4. Before installing front cover, remove all traces of liquid gasket from mating surface using a scraper.
- Also remove traces of liquid gasket from mating surface of cylinder block.

Installation (Cont'd)

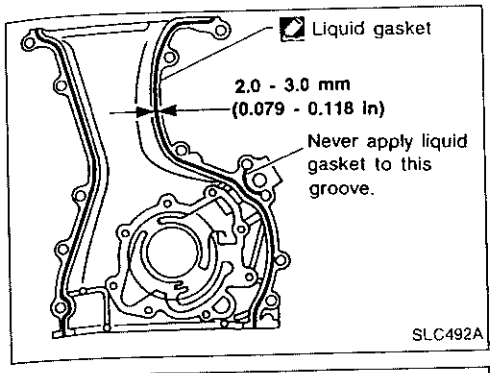

5. Apply a continuous bead of liquid gasket to mating surface of front cover.
- **Use Genuine Liquid Gasket or equivalent.**

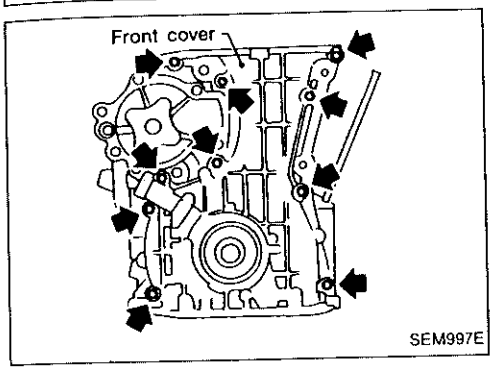

6. Install oil pump drive spacer and front cover.
- **Make sure that O-ring is installed on oil pump outlet passage of cylinder block.**

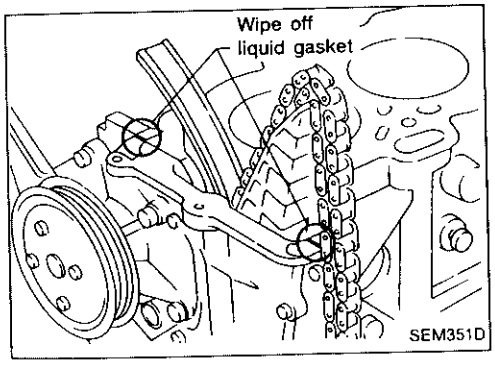

- Wipe off excessive liquid gasket.

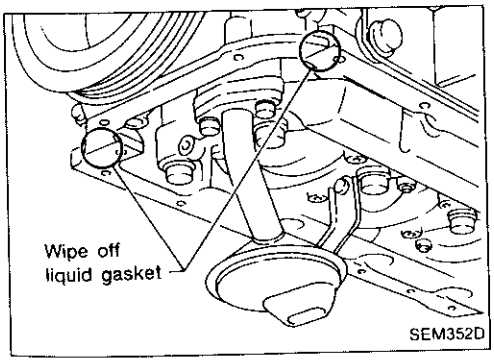

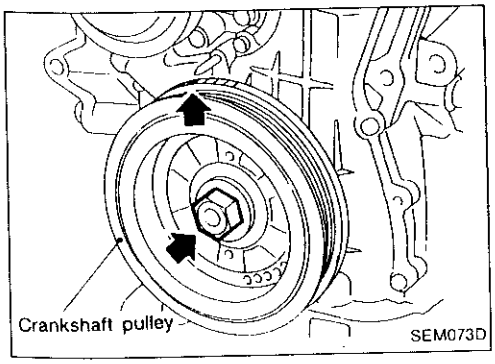

7. Install crankshaft pulley.
8. Set No. 1 piston at TDC on its compression stroke.

Installation (Cont'd)

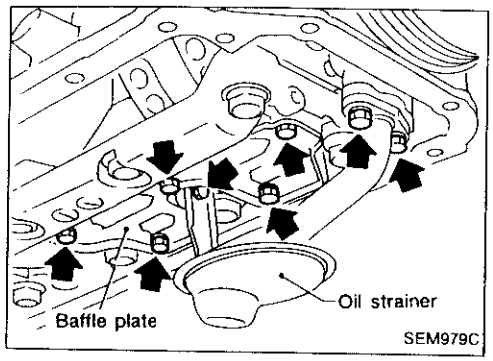

9. Install oil strainer and baffle plate.

10. Install oil pan.
    Refer to "Installation" in "OIL PAN" (EM-13).

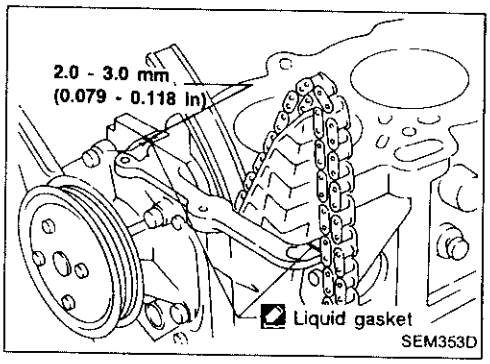

11. Before installing cylinder head gasket, apply a continuous bead of liquid gasket to mating surface of cylinder block.

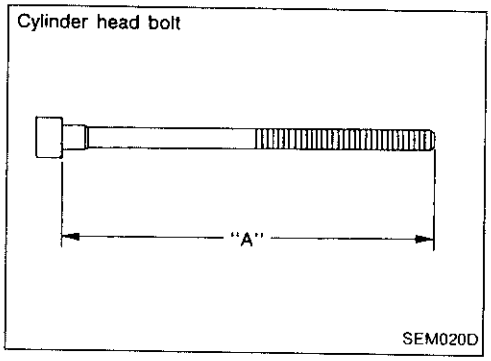

12. Install cylinder head with intake manifold.

CAUTION:

The cylinder head bolts can be reused providing dimension "A" is not exceeded.

Dimension "A":

158.2 mm (6.23 in)

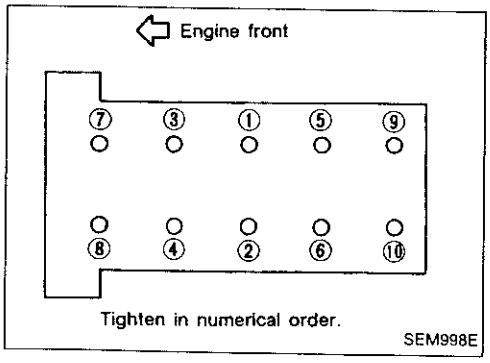

- **Cylinder head bolts tightening procedure:**

a. **Tighten all bolts to 39 N·m (4.0 kg-m, 29 ft-lb).**
b. **Tighten all bolts to 78 N·m (8.0 kg-m, 58 ft-lb).**
c. **Loosen all bolts completely.**
d. **Tighten all bolts to 34 to 44 N·m (3.5 to 4.5 kg-m, 25 to 33 ft-lb).**

Installation (Cont'd)

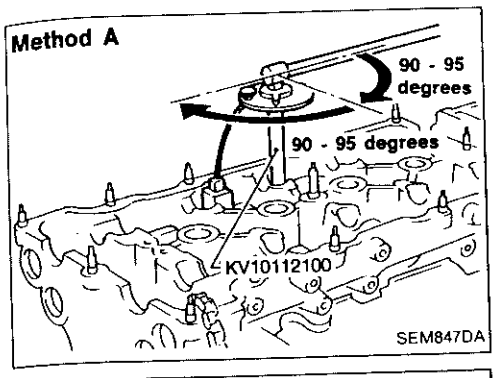

e. Method A: Turn all bolts 90 to 95 degrees clockwise with Tool or suitable angle wrench.
Method B: If an angle wrench is not available, mark all cylinder head bolts on the side facing engine front. Then, turn each cylinder head bolt 90 to 95 degrees clockwise.

f. Turn all bolts 90 to 95 degrees clockwise.

g. Ensure that paint mark on each bolt faces the rear of the engine. (Method B only)

Do not turn any bolt 180 to 190 degrees clockwise all at once.

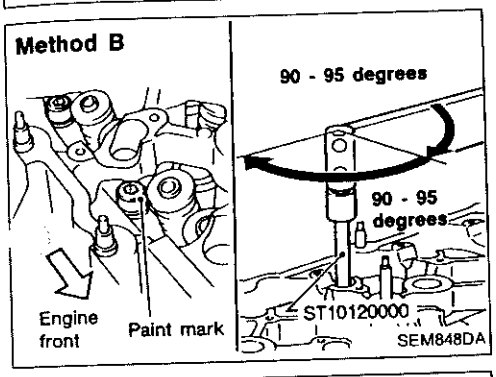

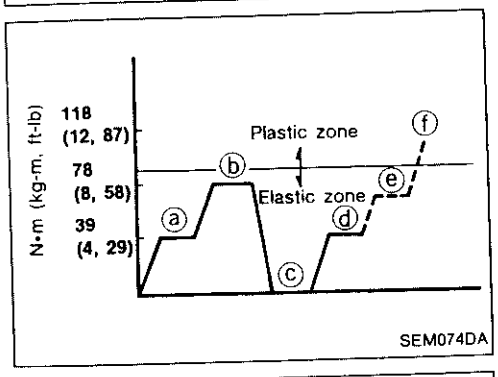

	Tightening torque N·m (kg-m, ft-lb)
ⓐ	39 (4.0, 29)
ⓑ	78 (8.0, 58)
ⓒ	0 (0, 0)
ⓓ	39 ± 5 (4.0 ± 0.5, 28.9 ± 3.6)
ⓔ	90^{+5}_{-0} degrees
ⓕ	90^{+5}_{-0} degrees

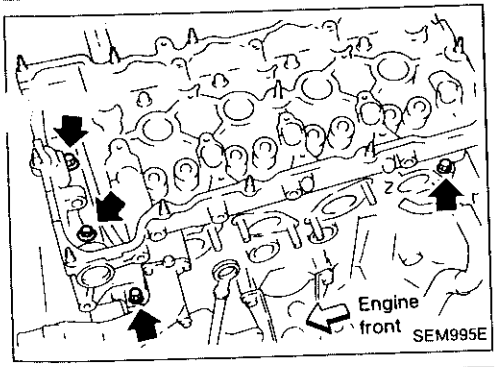

13. Install cylinder head outside bolts and inner sub-bolts.
14. Install exhaust manifold with turbocharger. Refer to "Installation" in "TURBOCHARGER" (EM-53).

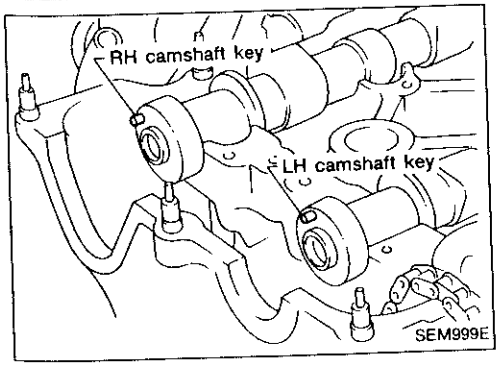

15. Install camshafts, camshaft brackets, oil tubes and baffle plate.
- Position camshaft.
  a. LH camshaft key at about 12 o'clock
  b. RH camshaft key at about 10 o'clock

Installation (Cont'd)

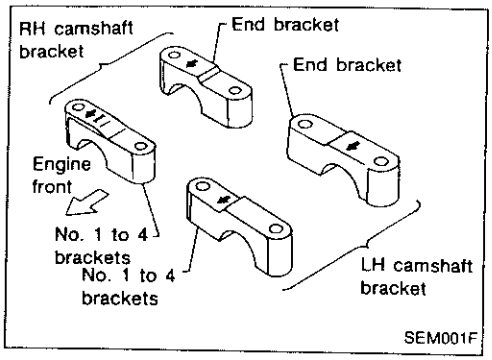

- **Position camshaft bracket.**

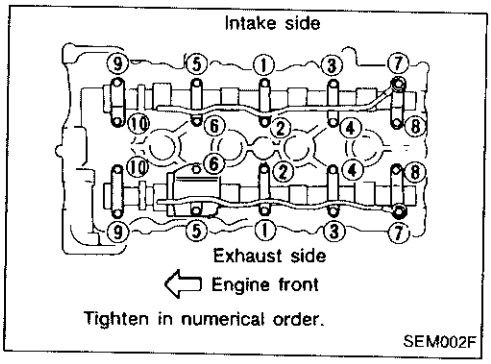

- **Camshaft bracket bolts tightening procedure**

  STEP 1:

  Tighten bolts ⑨ - ⑩ in that order then tighten bolts ① - ⑧ in that order.

  : 2 N·m (0.2 kg-m, 1.4 ft-lb)

  STEP 2:

  Tighten bolts in the specified order.

  : 6 N·m (0.6 kg-m, 4.3 ft-lb)

  STEP 3:

  Tighten bolts in the specified order.

  : 9.0 - 11.8 N·m (0.92 - 1.2 kg-m, 6.7 - 8.7 ft-lb)

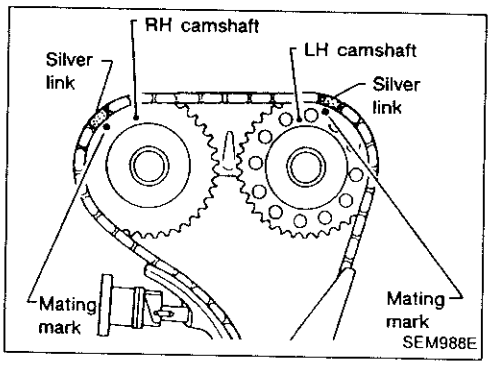

16. Install camshaft sprockets.

Line up mating marks on timing chain with mating marks on camshaft sprockets.

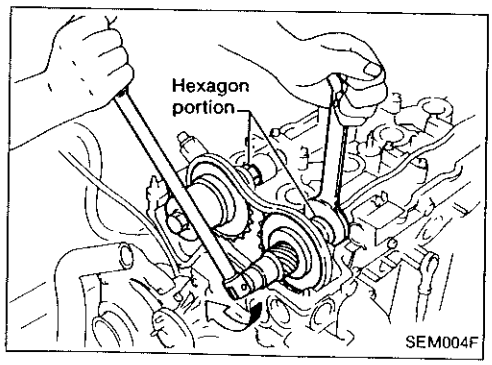

- Lock camshafts as shown in figure and tighten to specified torque.

  : 127 - 137 N·m (13 - 14 kg-m, 94 - 101 ft-lb)

Installation (Cont'd)

17. Install timing chain guide.

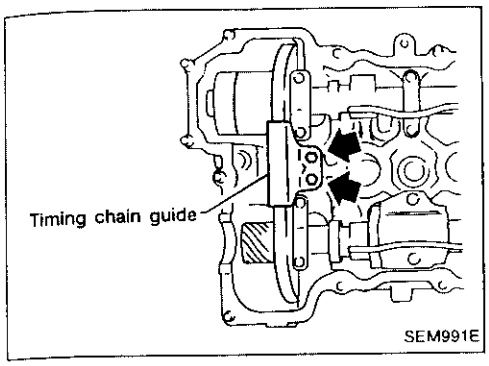

18. Install camshaft position sensor.
a. Make sure that No. 1 piston is at TDC on its compression stroke.
b. Set mating marks on rotor shaft of camshaft position sensor as shown.

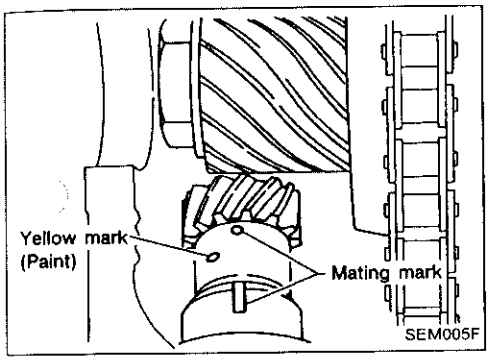

c. Install camshaft position sensor aligning the center of fixing bolt hole.
- **After installing, confirm that mating marks on rotor shaft of camshaft position sensor are as shown.**

d. Tighten fixing bolts.

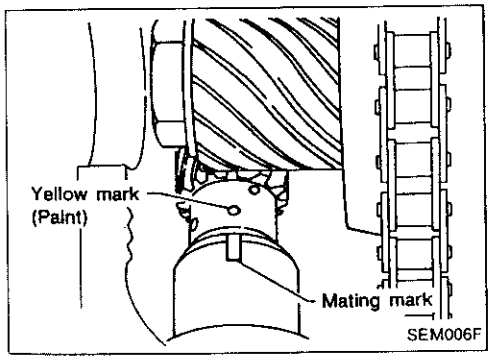

19. Install chain tensioner.
Press cam stopper down and "press-in" sleeve until hook can be engaged on pin. When tensioner is bolted in position the hook will release automatically. Ensure arrow "A" faces the front of the engine.

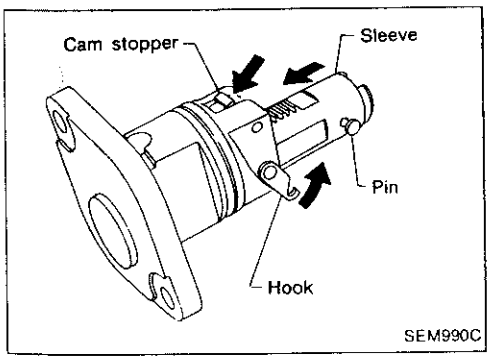

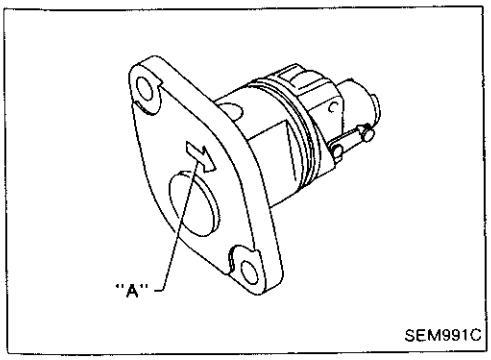

Installation (Cont'd)

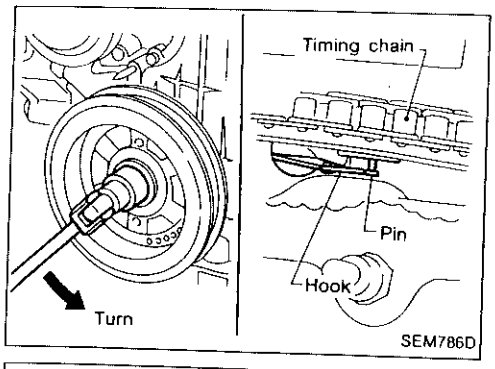

- **If hook does not release automatically, turn crankshaft counterclockwise until it does release.**

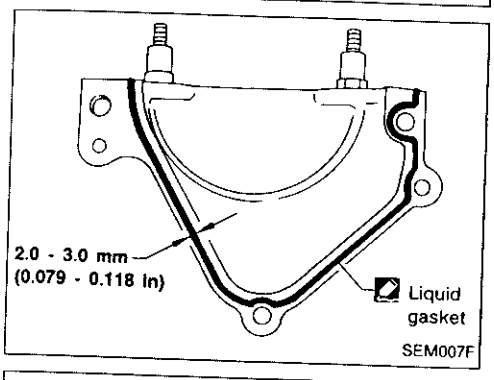

20. Install cylinder head front cover.
- Before installing, remove all traces of liquid gasket from mating surface of cylinder head and the cover using a scraper.
- Apply a continuous bead of liquid gasket to mating surface of cylinder head front cover.
- **Use Genuine Liquid Gasket or equivalent.**

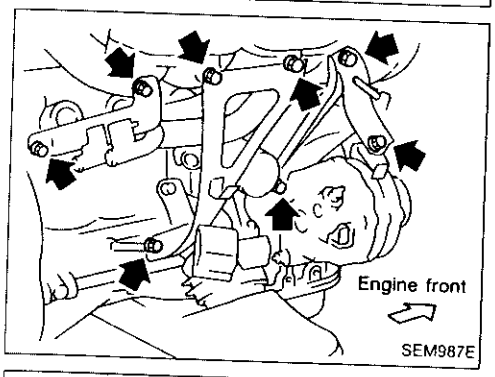

21. Install intake manifold supports.

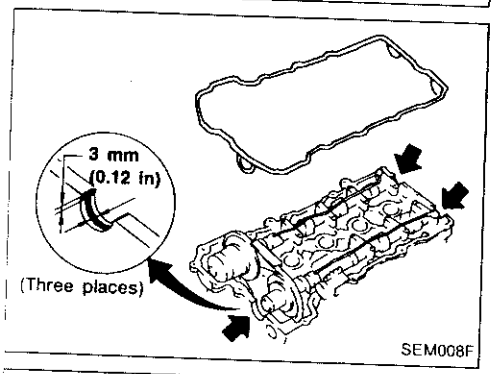

22. Remove all old liquid gasket from mating surfaces of rocker cover and cylinder head.
23. Apply a continuous bead of liquid gasket to mating surface of rocker cover gasket and cylinder head.
- **Use Genuine Liquid Gasket or equivalent.**

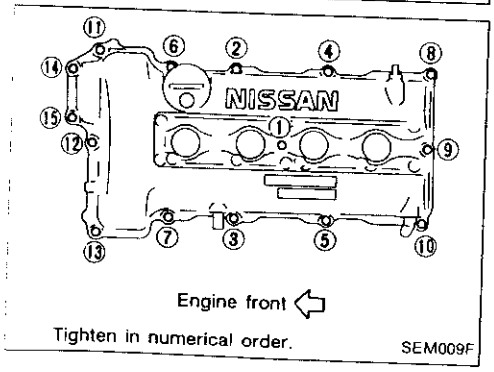

24. Install rocker cover.

Rocker cover tightening procedure:

(1) Tighten nuts ① - ⑩ - ⑪ - ⑬ - ⑧ in that order to 4 N·m (0.4 kg-m, 2.9 ft-lb).

(2) Tighten nuts ① to ⑬ as indicated in figure to 8 to 10 N·m (0.8 to 1.0 kg-m, 5.8 to 7.2 ft-lb).

Installation (Cont'd)

25. Reinstall any parts removed in reverse order of removal.
- When refilling engine coolant, refer to "Engine Maintenance" in MA section.

VALVE OIL SEAL

1. Remove rocker cover.
2. Remove camshafts and sprockets.
   Refer to "Removal" in "TIMING CHAIN" (EM-20).
3. Remove ignition coils on spark plugs.

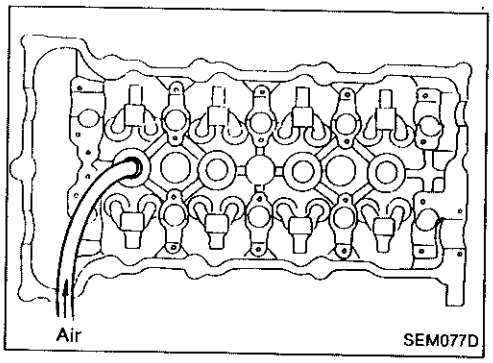

4. Install air hose adapter into spark plug hole and apply air pressure to hold valves in place. Apply a pressure of 490 kPa (4.9 bar, 5 kg/cm^2, 71 psi).
5. Remove rocker arm, rocker arm guide and shim.

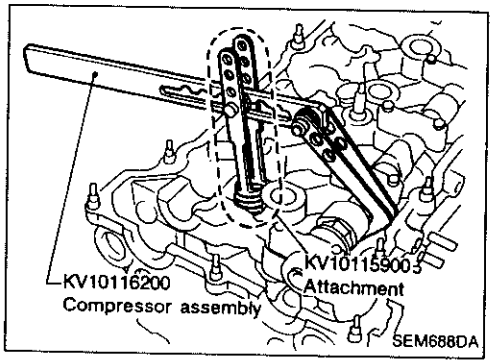

6. Remove valve spring with Tool.
Piston concerned should be set at TDC to prevent valve from falling.

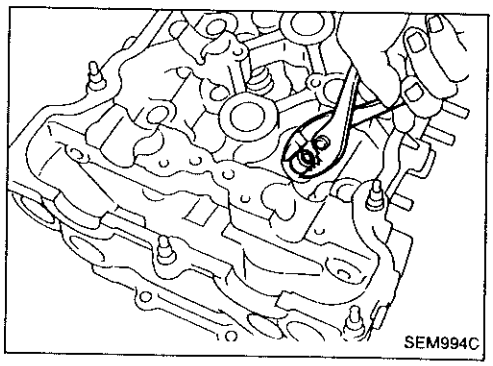

7. Remove valve oil seal.

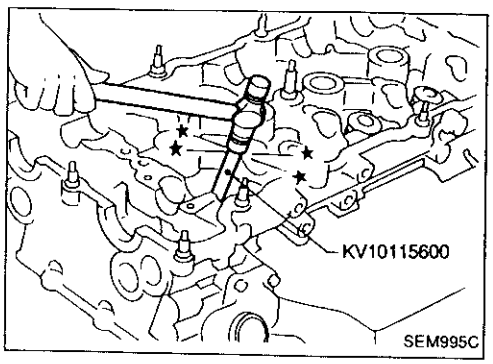

8. Apply engine oil to new valve oil seal and install it with Tool.

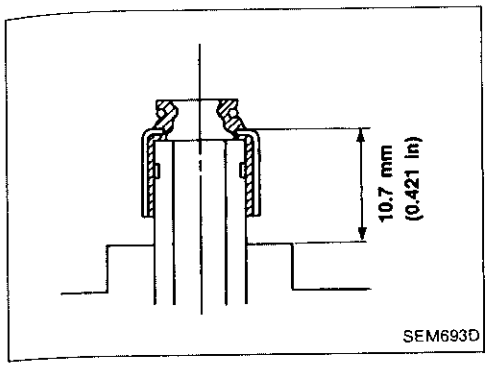

FRONT OIL SEAL

1. Remove the following parts:
- Engine under cover
- Drive belts
- Crankshaft pulley

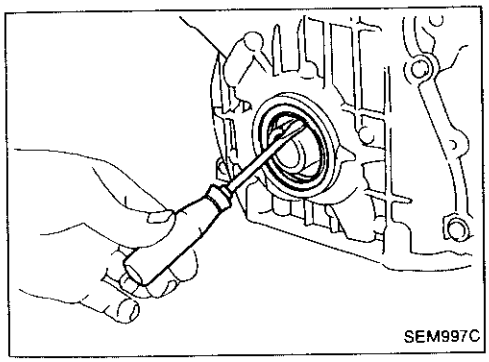

2. Remove front oil seal.
Be careful not to scratch front cover.

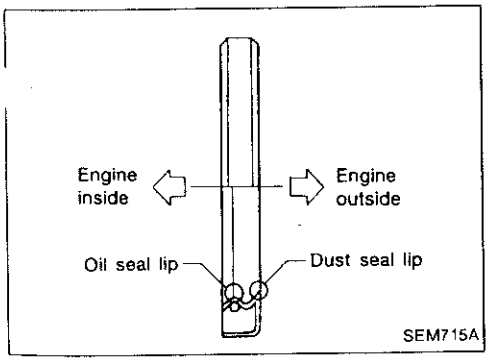

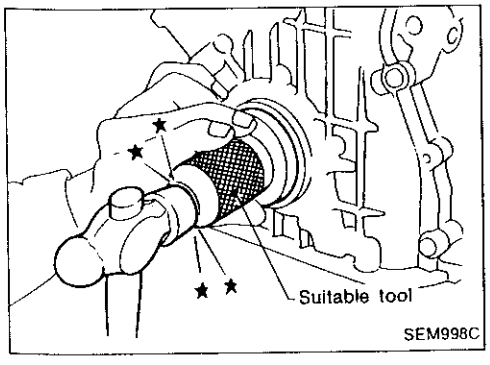

3. Apply engine oil to new oil seal and install it using a suitable tool.

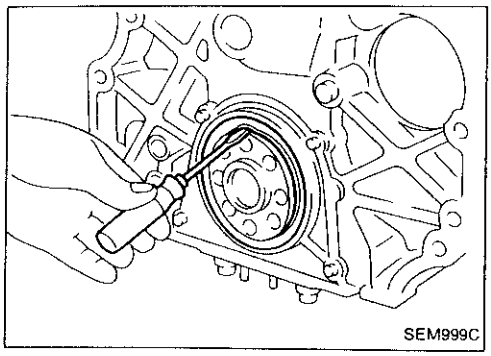
SEM999C

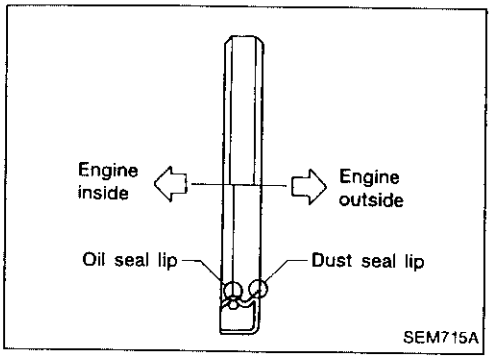

SEM715A

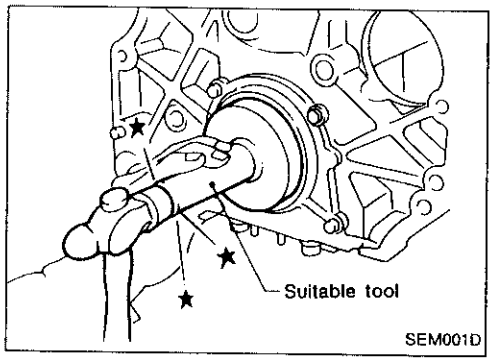

SEM001D

REAR OIL SEAL

1. Remove transmission. (Refer to MT or AT section.)
2. Remove flywheel or drive plate.
3. Remove rear oil seal.

Be careful not to scratch rear oil seal retainer.

4. Apply engine oil to new oil seal and install it using a suitable tool.

Removal

1. Release fuel pressure.
   Refer to "Releasing Fuel Pressure" in EC section.
2. Drain coolant.
3. Remove air duct from intake manifold.
4. Remove PCV hoses from rocker cover.
5. Remove vacuum hoses, fuel hoses, water hoses, wires, harnesses, connectors, etc. from intake manifold.

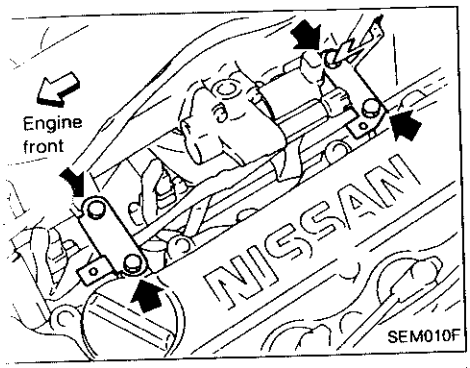

6. Remove intake manifold collector supports.

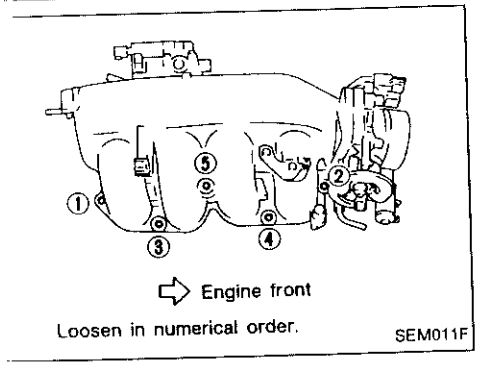

7. Remove intake manifold collector.

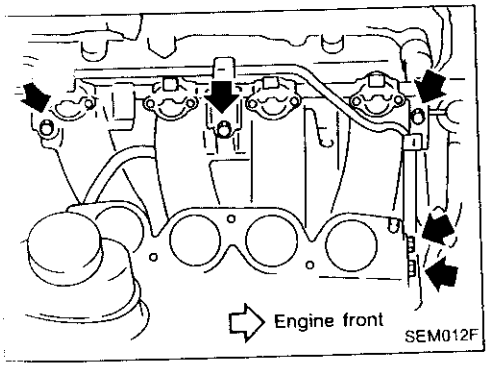

8. Remove harness connectors of engine coolant temperature sensor and thermal transmitter.
9. Remove fuel tube assembly.

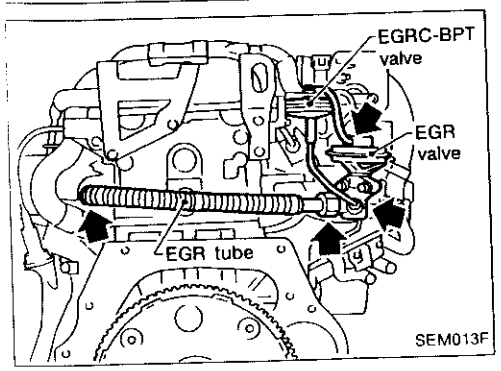

10. Remove EGR tube.
11. Remove hose and tube between EGR valve and EGRC-BPT valve.

Removal (Cont'd)

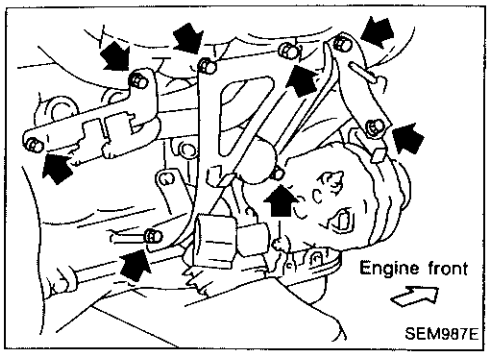

12. Remove intake manifold supports.

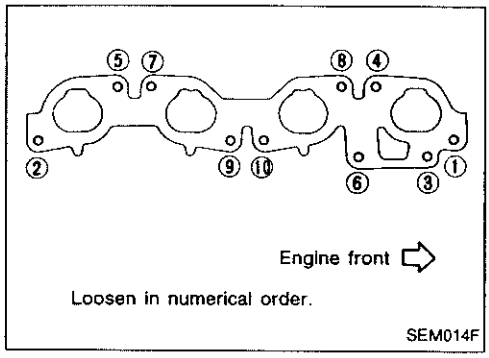

13. Remove intake manifold.

Installation

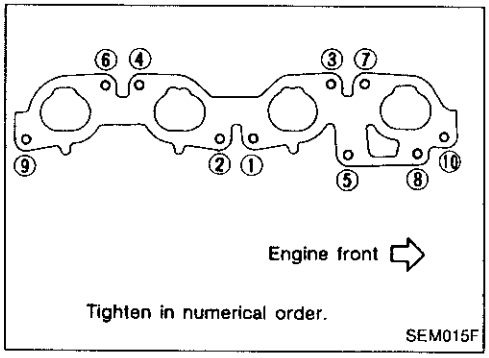

1. Install intake manifold.
2. Install intake manifold supports.
3. Install EGR tube.
4. Install hose and tube between EGR valve and EGRC-BPT valve.

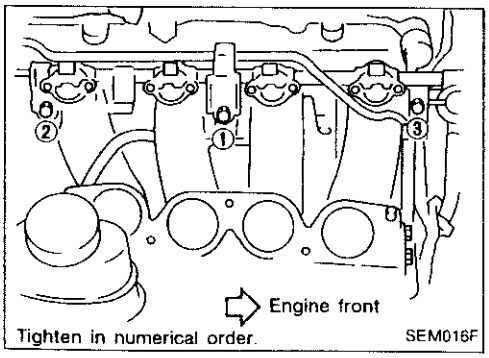

5. Install fuel tube assembly.
- **Tighten bolts in two steps.**
  1st: 9.3 - 10.8 N·m (0.95 - 1.1 kg-m, 6.9 - 8.0 ft-lb)
  2nd: 21 - 26 N·m (2.1 - 2.7 kg-m, 15 - 20 ft-lb)
6. Connect harness connectors of engine coolant temperature sensor and thermal transmitter.

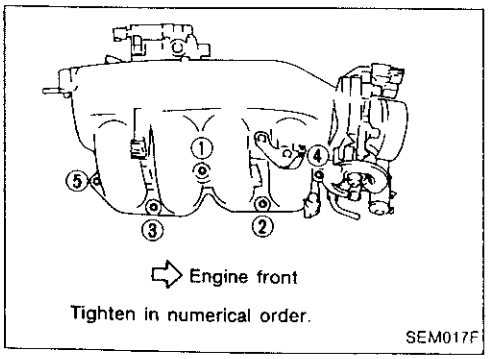

7. Install intake manifold collector.

Installation (Cont'd)

8. Reinstall any parts removed in reverse order of removal.

SEC. 111•130

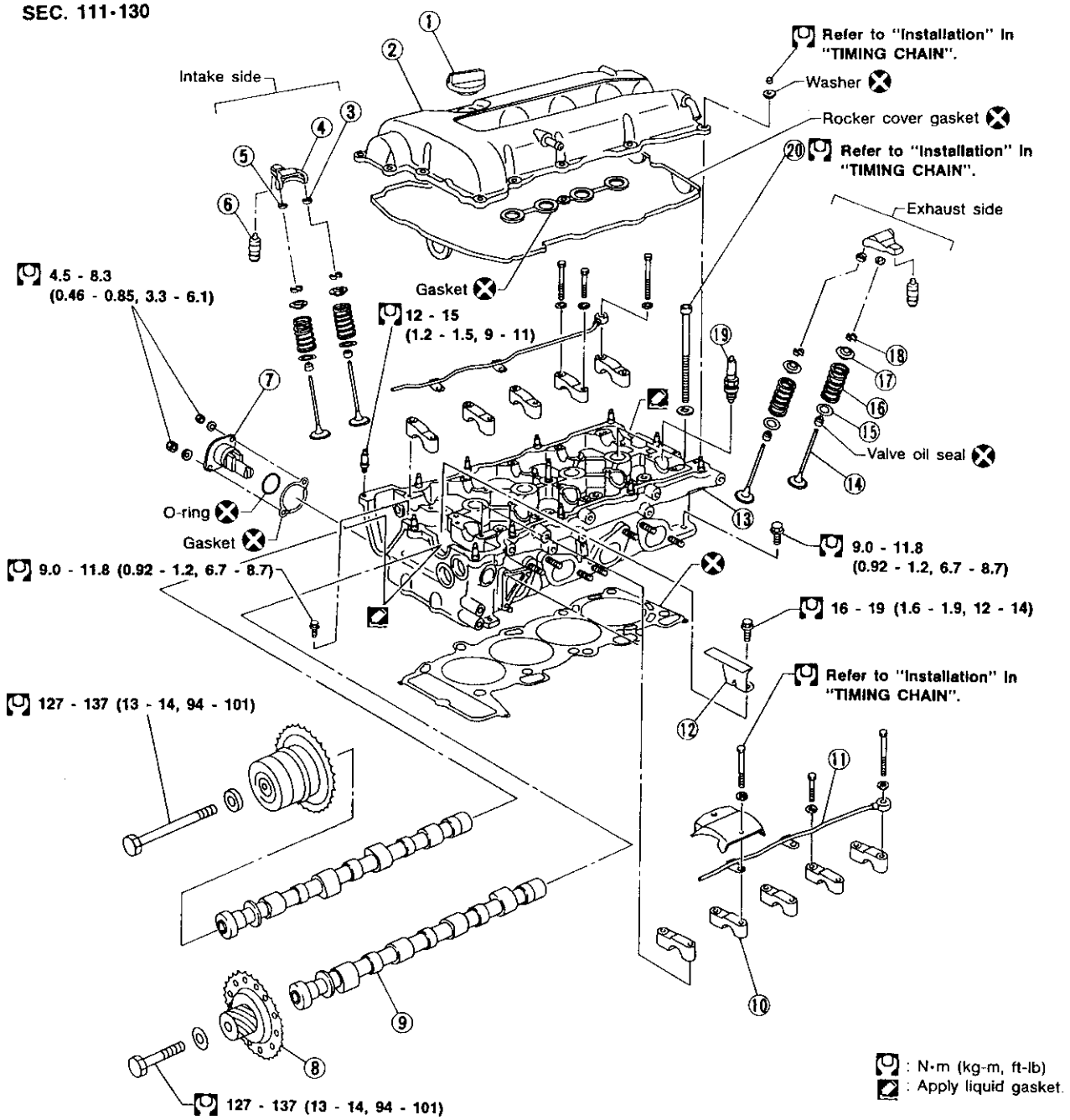

SEM018F

① Oil filler cap
② Rocker cover
③ Rocker arm guide
④ Rocker arm
⑤ Shim
⑥ Hydraulic lash adjuster
⑦ Chain tensioner
⑧ Camshaft sprocket
⑨ Camshaft
⑩ Camshaft bracket
⑪ Oil tube
⑫ Chain guide
⑬ Cylinder head
⑭ Valve
⑮ Valve spring seat
⑯ Valve spring
⑰ Valve spring retainer
⑱ Valve collet
⑲ Spark plug
⑳ Cylinder head bolt

CAUTION:
- **When installing rocker arms, camshaft and oil seal, lubricate contacting surfaces with new engine oil.**
- **When tightening cylinder head bolts, camshaft sprocket bolts and camshaft bracket bolts, lubricate thread portions and seat surfaces of bolts with new engine oil.**

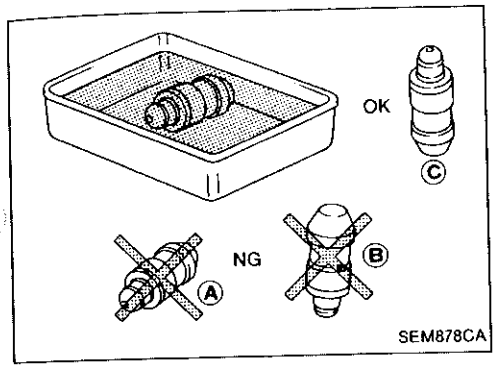

- **If a hydraulic lash adjuster is kept on its side, there is a risk of air entering it. When hydraulic lash adjusters are removed, stand them straight up or soak them in new engine oil.**
- **Do not disassemble hydraulic lash adjusters.**
- **Attach tags to lash adjusters so as not to mix them up.**

Removal and Installation

Removal and installation procedures are the same as those for timing chain. Refer to "Removal" and "Installation" in "TIMING CHAIN" (EM-20, EM-24).

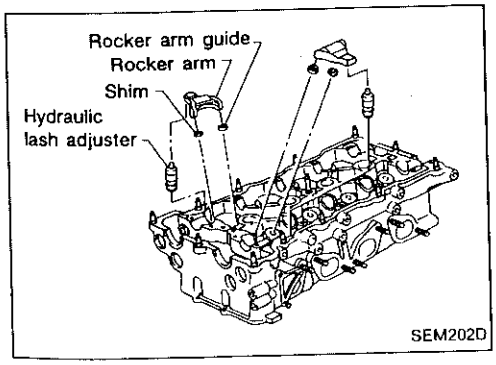

Disassembly

1. Remove rocker arms, shims, rocker arm guides and hydraulic lash adjusters from cylinder head.

CAUTION:
Keep parts in order so that they can be installed in their original positions during assembly. (Install parts in their original positions.)

2. Remove intake manifold. Refer to "Removal" in "INTAKE MANIFOLD" (EM-35).
3. Remove water outlet.

Disassembly (Cont'd)

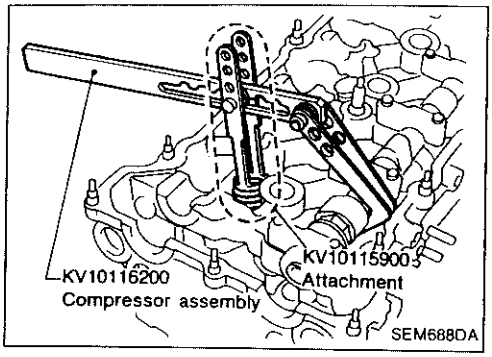

4. Remove valve components with Tool.

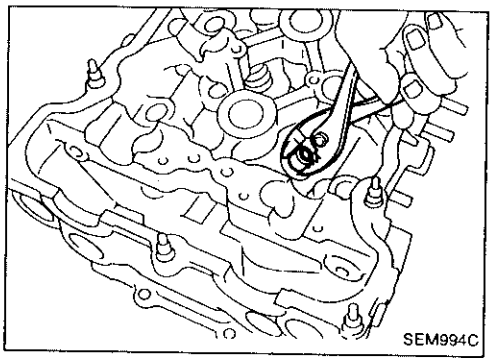

5. Remove valve oil seal with a suitable tool.

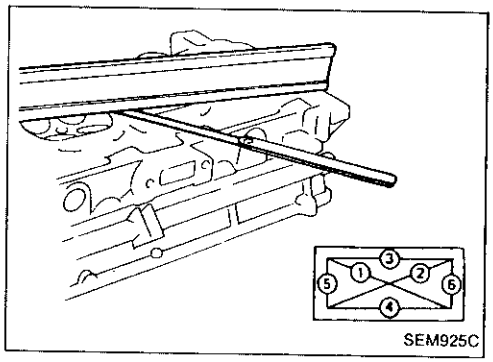

Inspection

CYLINDER HEAD DISTORTION

Measure the distorsion in the directions as shown.

Head surface distorsion:

Standard

Less than 0.03 mm (0.0012 in)

Limit

0.1 mm (0.004 in)

If beyond the specified limit, replace or resurface.

Resurfacing limit:

The resurfacing limit of cylinder head is determined by the cylinder block resurfacing in an engine.

Amount of cylinder head resurfacing is "A".

Amount of cylinder block resurfacing is "B".

The maximum limit is as follows:

A + B = 0.2 mm (0.008 in)

After resurfacing cylinder head, check that camshaft rotates freely by hand. If resistance is felt, cylinder head must be replaced.

Nominal cylinder head height:

136.9 - 137.1 mm (5.390 - 5.398 in)

CAMSHAFT VISUAL CHECK

Check camshaft for scratches, seizure and wear.

Inspection (Cont'd)

CAMSHAFT RUNOUT

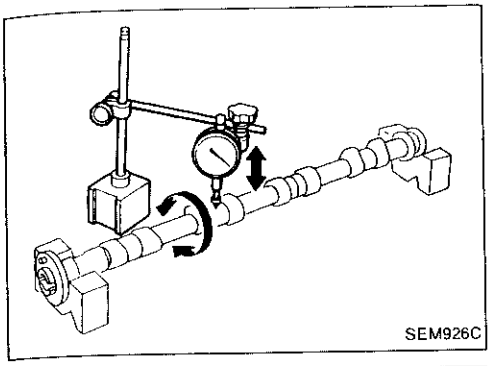
SEM926C

1. Measure camshaft runout at the center journal.
   Runout (Total indicator reading):
   Standard
   Less than 0.02 mm (0.0008 in)
   Limit
   0.1 mm (0.004 in)
2. If it exceeds the limit, replace camshaft.

CAMSHAFT CAM HEIGHT

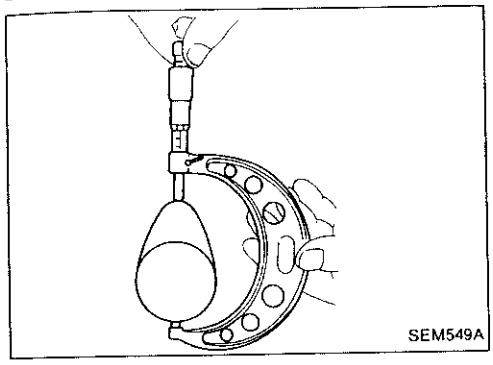
SEM549A

1. Measure camshaft cam height.
   Standard cam height:
   Intake & Exhaust
   37.920 - 38.110 mm (1.4929 - 1.5004 in)
   Cam wear limit:
   Intake & Exhaust
   0.20 mm (0.0079 in)
2. If wear is beyond the limit, replace camshaft.

CAMSHAFT JOURNAL CLEARANCE

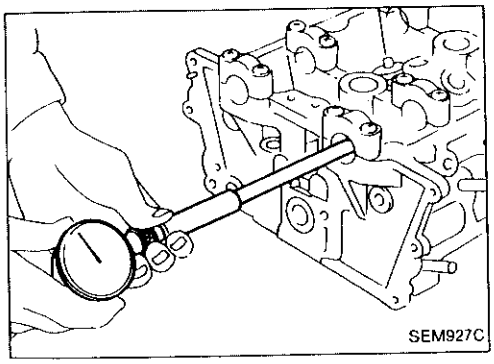
SEM927C

1. Install camshaft bracket and tighten bolts to the specified torque.
2. Measure inner diameter of camshaft bearing.
   Standard inner diameter:
   28.000 - 28.021 mm (1.1024 - 1.1032 in)

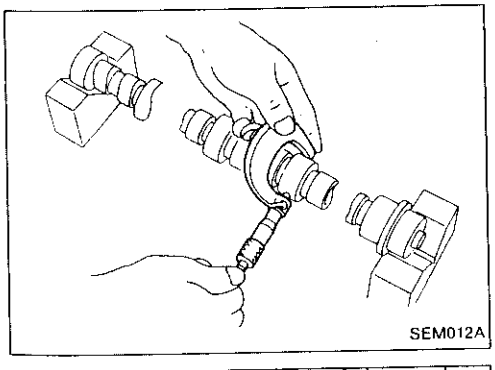
SEM012A

3. Measure outer diameter of camshaft journal.
   Standard outer diameter:
   27.935 - 27.955 mm (1.0998 - 1.1006 in)
4. If clearance exceeds the limit, replace camshaft and/or cylinder head.
   Camshaft journal clearance:
   Standard
   0.045 - 0.086 mm (0.0018 - 0.0034 in)
   Limit
   0.15 mm (0.0059 in)

CAMSHAFT END PLAY

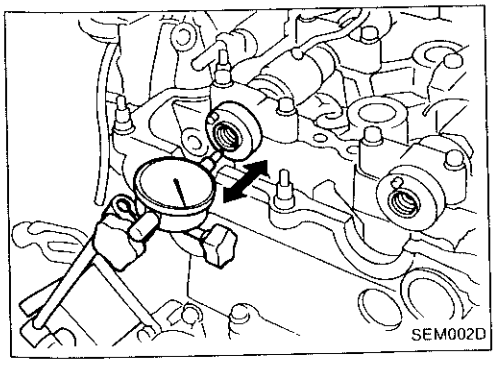
SEM002D

1. Install camshaft in cylinder head.
2. Measure camshaft end play.
   Camshaft end play:
   Standard
   0.092 - 0.173 mm (0.0036 - 0.0068 in)
   Limit
   0.20 mm (0.0079 in)

Inspection (Cont'd)

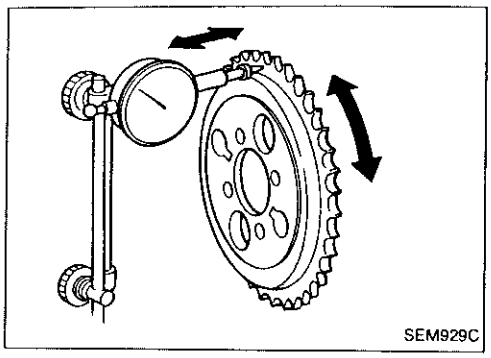
SEM929C

CAMSHAFT SPROCKET RUNOUT

1. Install sprocket on camshaft.
2. Measure camshaft sprocket runout.
   Runout (Total indicator reading):
   Limit 0.25 mm (0.0098 in)
3. If it exceeds the limit, replace camshaft sprocket.

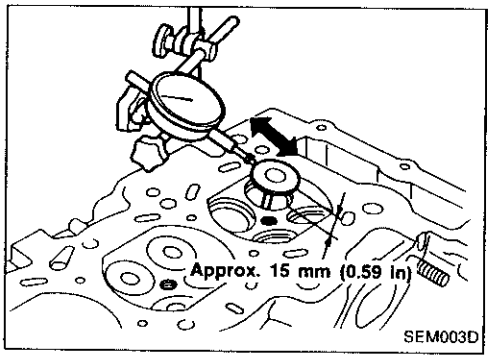

SEM003D

VALVE GUIDE CLEARANCE

1. Measure valve deflection in a parallel direction with rocker arm. (Valve and valve guide mostly wear in this direction.)
   Valve deflection limit (Dial gauge reading):
   Intake & Exhaust
   0.2 mm (0.008 in)

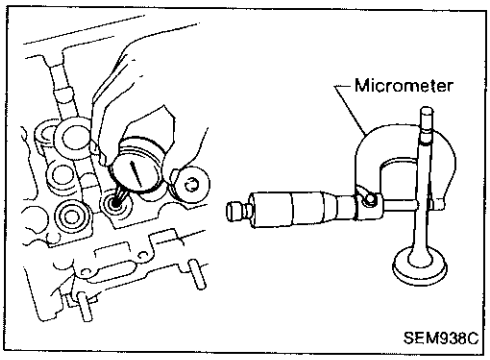

SEM938C

2. If it exceeds the limit, check valve to valve guide clearance.
a. Measure valve stem diameter and valve guide inner diameter.
b. Check that clearance is within specification.

Valve to valve guide clearance:

Unit: mm (in)

	Standard	Limit
Intake	0.020 - 0.053 (0.0008 - 0.0021)	0.08 (0.0031)
Exhaust	0.040 - 0.073 (0.0016 - 0.0029)	0.1 (0.004)

c. If it exceeds the limit, replace valve or valve guide.

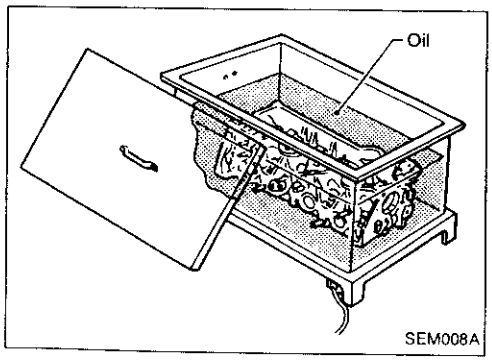

SEM008A

VALVE GUIDE REPLACEMENT

1. To remove valve guide, heat cylinder head to 110 to 130°C (230 to 266°F).

Inspection (Cont'd)

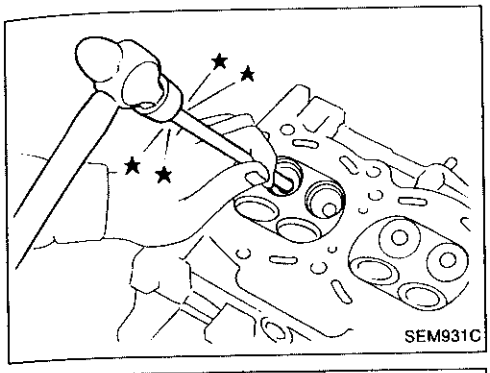

2. Press out valve guide or use a hammer and suitable tool.

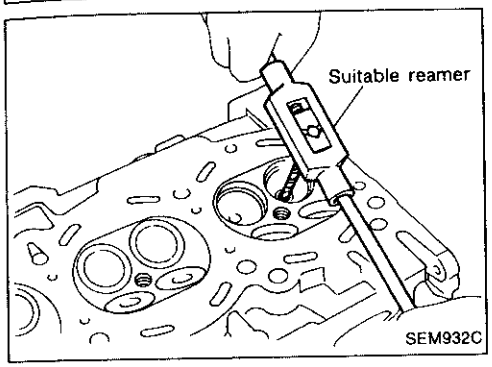

3. Ream cylinder head valve guide hole.
   Valve guide hole diameter
   (for service parts):
   Intake
   10.175 - 10.196 mm (0.4006 - 0.4014 in)
   Exhaust
   11.175 - 11.196 mm (0.4400 - 0.4408 in)

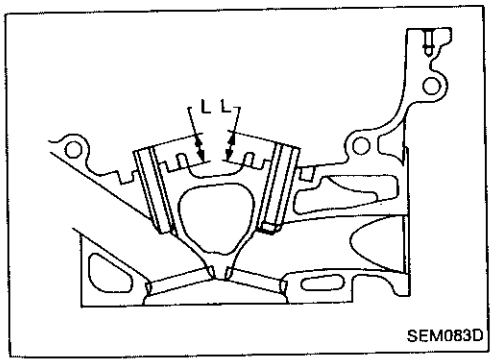

4. Heat cylinder head to 110 to 130°C (230 to 266°F) and press service valve guide onto cylinder head.
   Projection "L":
   14.0 - 14.2 mm (0.551 - 0.559 in)

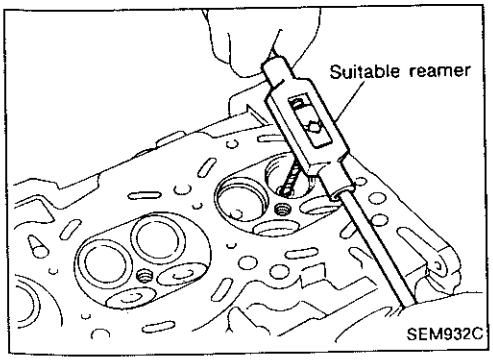

5. Ream valve guide.
   Valve guide inner diameter:
   Intake
   6.000 - 6.018 mm (0.2362 - 0.2369 in)
   Exhaust
   7.000 - 7.018 mm (0.2756 - 0.2763 in)

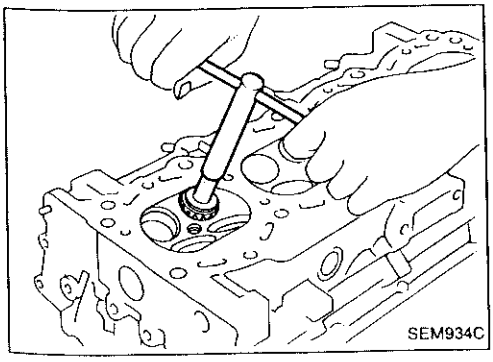

VALVE SEATS

Check valve seats for pitting at contact surface. Resurface or replace if excessively worn.

- **Before repairing valve seats, check valve and valve guide for wear. If they have worn, replace them. Then correct valve seat.**
- **Cut with both hands to uniform the cutting surface.**

Inspection (Cont'd)

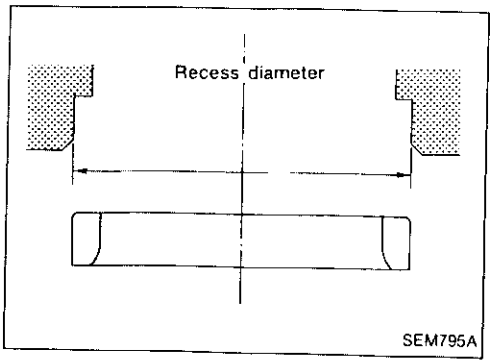

REPLACING VALVE SEAT FOR SERVICE PARTS

1. Bore out old seat until it collapses. Set machine depth stop so that boring cannot contact bottom face of seat recess in cylinder head.
2. Ream cylinder head recess.

Reaming bore for service valve seat
Oversize [0.5 mm (0.020 in)]:
Intake
35.500 - 35.516 mm (1.3976 - 1.3983 in)
Exhaust
31.500 - 31.516 mm (1.2402 - 1.2408 in)

Use the valve guide center for reaming to ensure valve seat will have the correct fit.

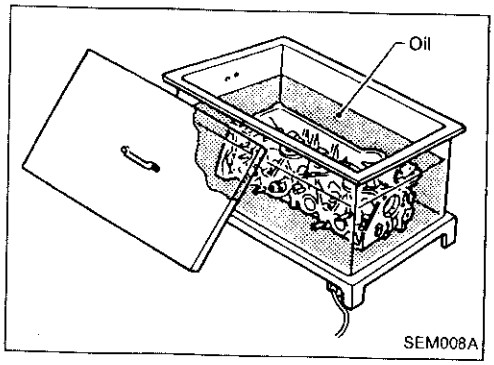

3. Heat cylinder head to 110 to 130°C (230 to 266°F).
4. Press fit valve seat until it seats on the bottom.

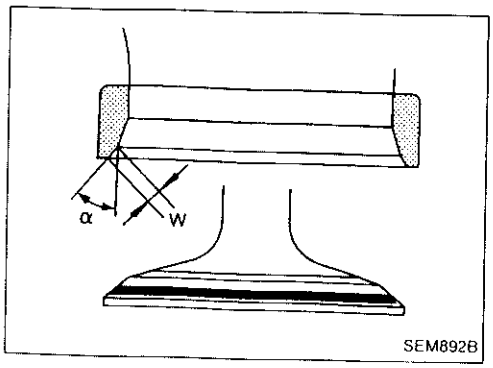

5. Cut or grind valve seat using a suitable tool at the specified dimensions as shown in SDS.
6. After cutting, lap valve seat with abrasive compound.
7. Check valve seating condition.

Seat face angle "α":
44°53' - 45°07' deg.
Contacting width "W":
Intake
1.4 - 1.7 mm (0.055 - 0.067 in)
Exhaust
1.7 - 2.0 mm (0.067 - 0.079 in)

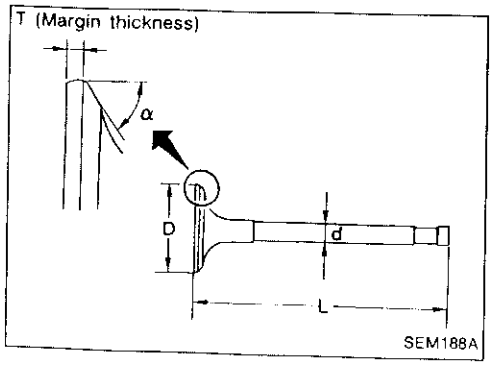

VALVE DIMENSIONS

Check dimensions in each valve. For dimensions, refer to SDS.

When valve head has been worn down to 0.5 mm (0.020 in) in margin thickness, replace valve.

Grinding allowance for valve stem tip is 0.2 mm (0.008 in) or less.

Inspection (Cont'd)

VALVE SPRING

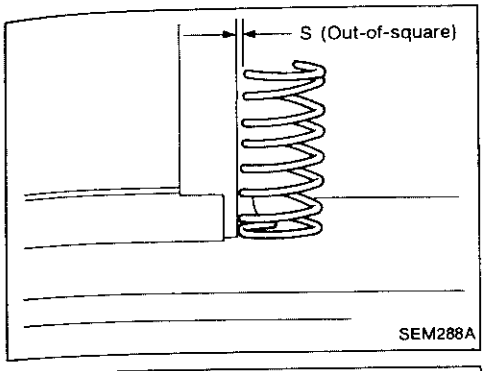

Squareness

1. Measure "S" dimension.
   Out-of-square:
   Less than 2.2 mm (0.087 in)
2. If it exceeds the limit, replace spring.

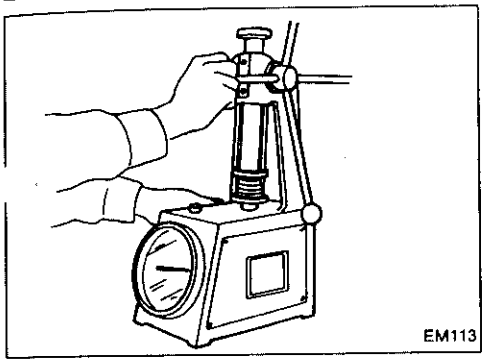

Pressure

Check valve spring pressure.

Standard:
578.02 - 641.57 N
(58.94 - 65.42 kg, 129.96 - 144.25 lb)
at 30.0 mm (1.181 in)

Limit:
More than 549.2 N (56.0 kg, 123.5 lb)
at 30.0 mm (1.181 in)

If it exceeds the limit, replace spring.

HYDRAULIC LASH ADJUSTER

1. Check contact and sliding surfaces for wear or scratches.

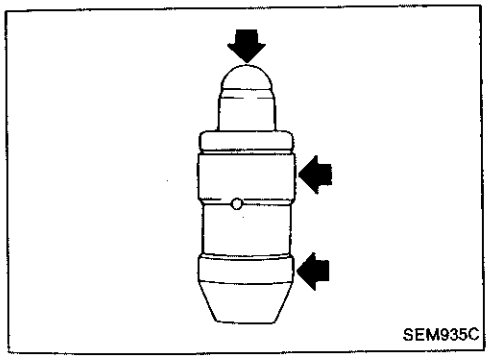

2. Check diameter of lash adjuster.
   Outer diameter:
   16.980 - 16.993 mm (0.6685 - 0.6690 in)

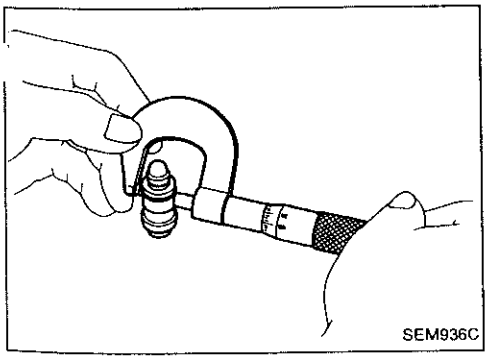

3. Check lash adjuster guide inner diameter.
   Inner diameter:
   17.000 - 17.020 mm (0.6693 - 0.6701 in)
   Standard clearance between lash adjuster and adjuster guide:
   0.007 - 0.040 mm (0.0003 - 0.0016 in)

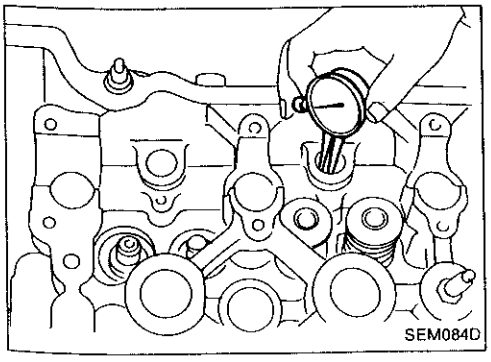

Inspection (Cont'd)

ROCKER ARM, SHIM AND ROCKER ARM GUIDE

Check contact and sliding surfaces of rocker arms, shims and rocker arm guides for wear or scratches.

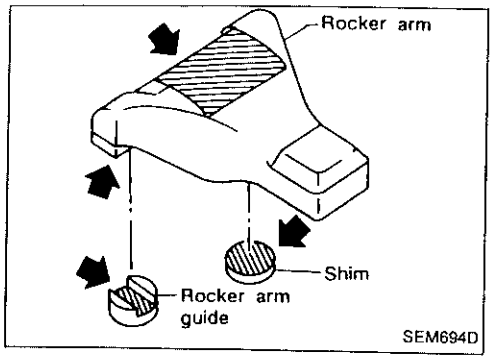

Assembly

1. Install valve component parts.

- **Install valves, noting their identification marks as indicated in the table below.**

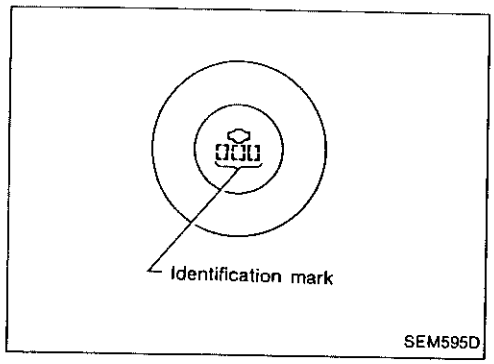

Valve	Identification mark
Intake valve	53J
Exhaust valve	5J

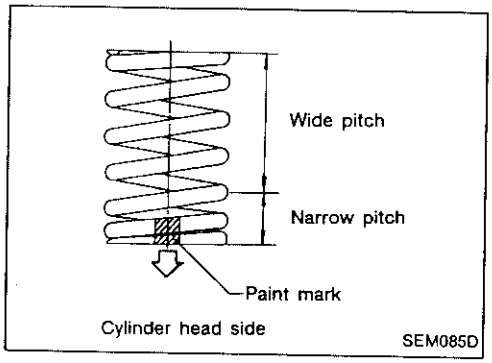

- **Always use new valve oil seal.**
  Refer to OIL SEAL REPLACEMENT.
- **Before installing valve oil seal, install valve spring seat.**
- **Install valve spring (uneven pitch type) with its narrow pitched side toward cylinder head side (paint mark).**
- **After installing valve components, tap valve stem tip with a plastic hammer to assure a proper fit.**

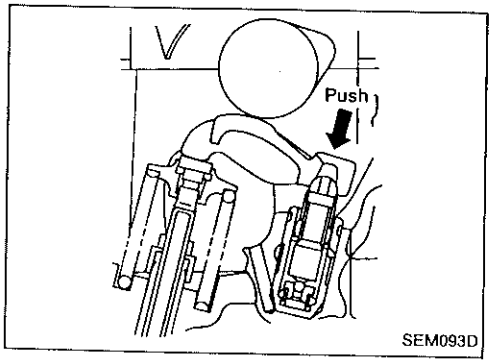

2. Check hydraulic lash adjusters.

a. Push on the rocker arm above the hydraulic lash adjuster. If it moves 1 mm (0.04 in) or more, there is air in the high pressure chamber.
Noise will be emitted from hydraulic lash adjuster if engine is started without bleeding air.

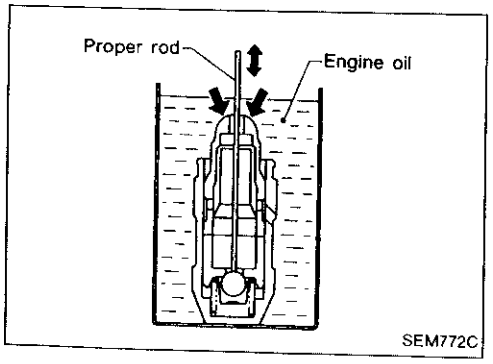

b. Remove hydraulic lash adjuster and dip in a container filled with engine oil. While pushing plunger as shown in figure, lightly push check ball using a thin rod. Air is completely bled when plunger no longer moves.

Air cannot be bled from this type of lash adjuster by running the engine.

Assembly (Cont'd)

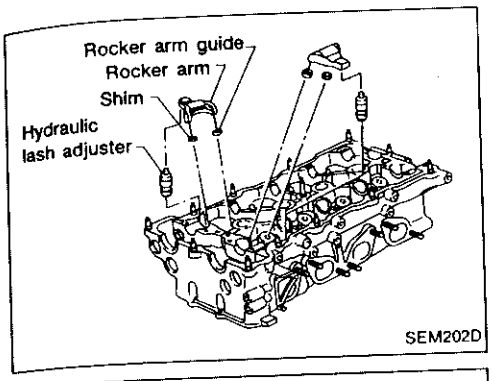

3. Install rocker arms, shims, rocker arm guides and hydraulic lash adjusters.

CAUTION:
Install all parts in their original positions.

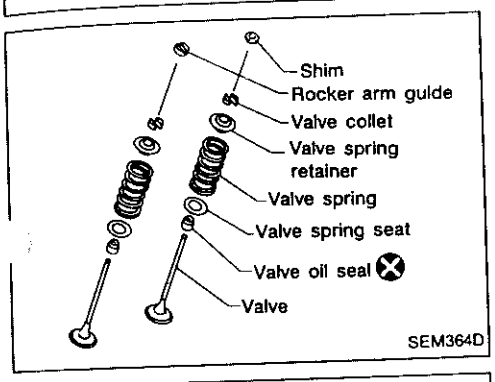

Valve shim clearance adjustment

4. Determine proper shim size when replacing valve, cylinder head, shim, rocker arm guide, or valve seat.

a. Install valve component parts to cylinder head (Except shim).

- Always replace rocker arm guide with a new one.

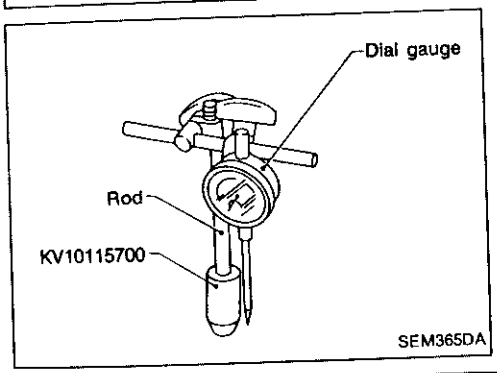

b. Remove hydraulic lash adjuster.

c. Install Tool* into hydraulic lash adjuster fixing hole.

* Tool (KV10115700) is screwed into magnetic stand rod used with dial gauge.

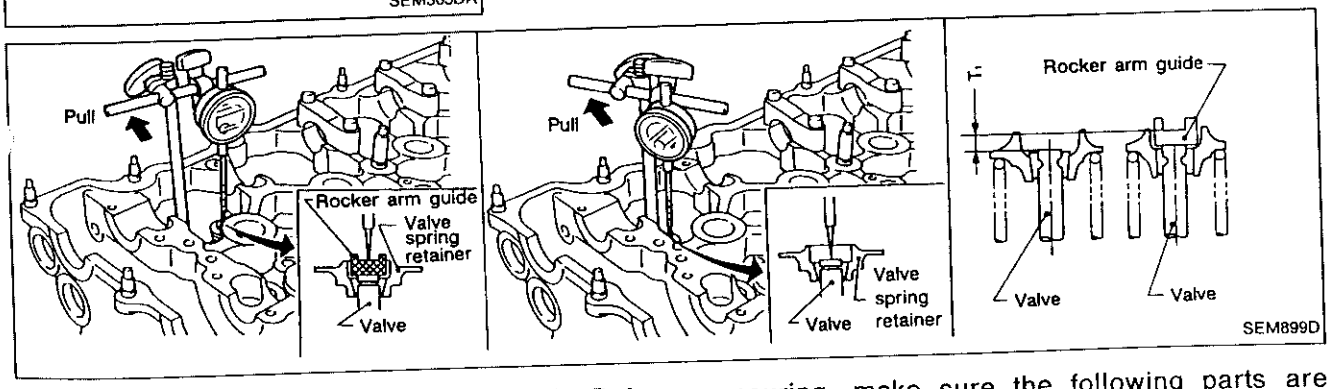

d. Before measuring, make sure the following parts are installed in the cylinder head: valve, valve spring, collet, retainer, and rocker arm guide (except shim). On shim side, measure difference (T_1) between contact surfaces of rocker arm guide and valve stem end.

When measuring, lightly pull dial indicator rod toward you to eliminate play in Tool (KV10115700).

Assembly (Cont'd)

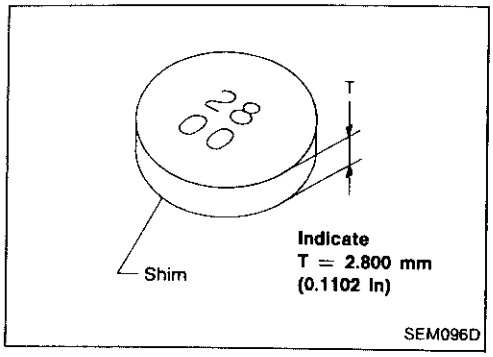

e. Select proper shim.
Shim thickness (T): T_1 ±0.025 mm (0.0010 in)

- Shims are available in thicknesses from 2.800 mm (0.1102 in) to 3.200 mm (0.1260 in) in steps of 0.025 mm (0.0010 in).

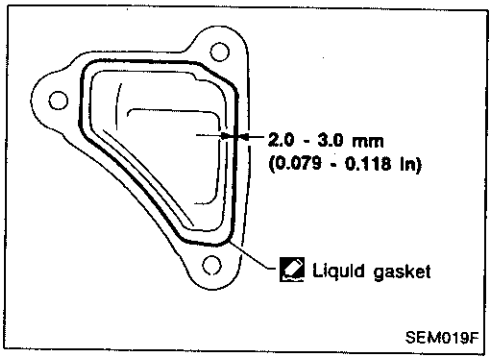

5. Install water outlet.
(1) Before installing water outlet, remove all traces of liquid gasket from mating surface using a scraper.
- Also remove traces of liquid gasket from mating surface of cylinder head.

(2) Apply a continuous bead of liquid gasket to mating surface of water outlet.
- **Use Genuine Liquid Gasket or equivalent.**

6. Install intake manifold.
Refer to "Installation" in "INTAKE MANIFOLD" (EM-36).

Removal

1. Drain coolant from radiator and cylinder block.
2. Remove engine under cover.
3. Remove front exhaust tube.
4. Remove air ducts for turbocharger unit.
5. Remove air cleaner case.
6. Remove wastegate valve control solenoid and its hoses.

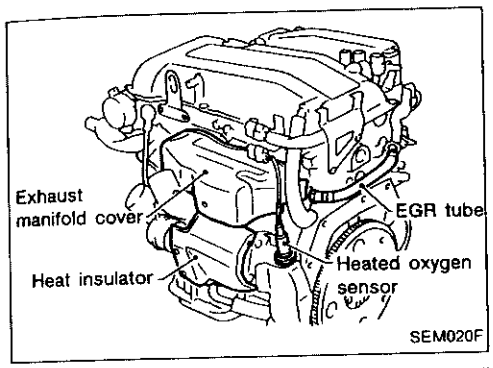

7. Remove exhaust manifold cover.
8. Remove heat insulator.
9. Remove heated oxygen sensor.
10. Remove EGR tube.

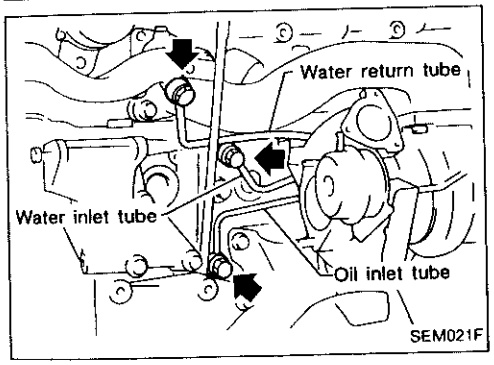

11. Remove connector bolts for water inlet and return tubes and oil inlet tube.

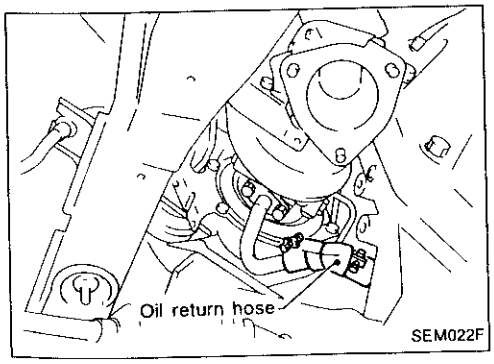

12. Remove oil return hose from cylinder block.

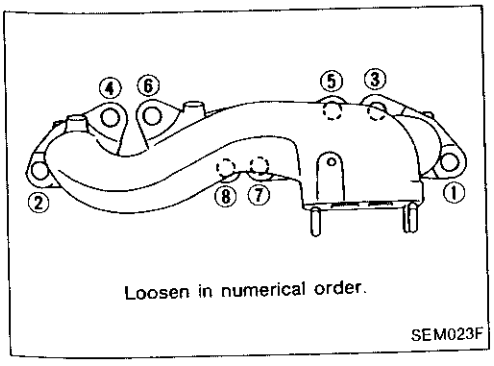

13. Remove exhaust manifold fixing nuts.

Removal (Cont'd)

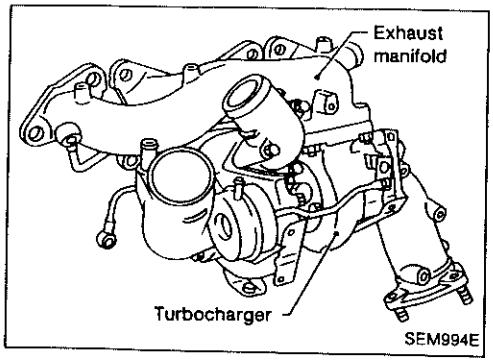

14. Remove steering column shaft lower joint (LHD model only).
15. Remove exhaust manifold with turbocharger unit.

Disassembly

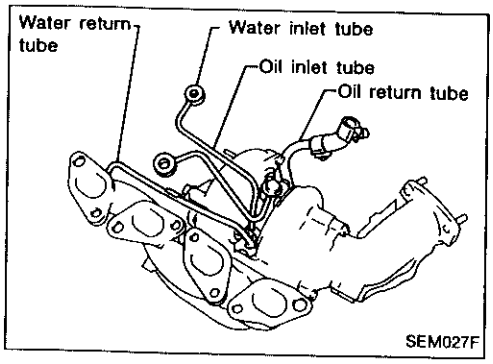

1. Remove oil tubes and water tubes. Before removing tubes, put mating marks on tube connectors and turbocharger.

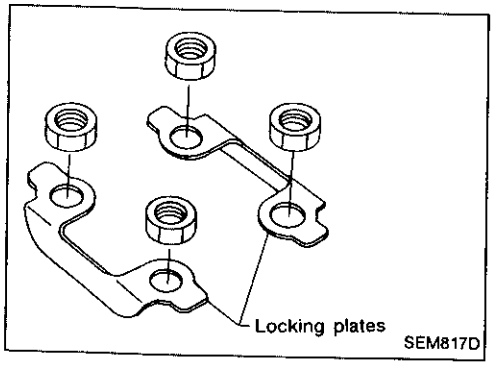

2. Unbend locking plates for turbocharger unit fastening nuts.

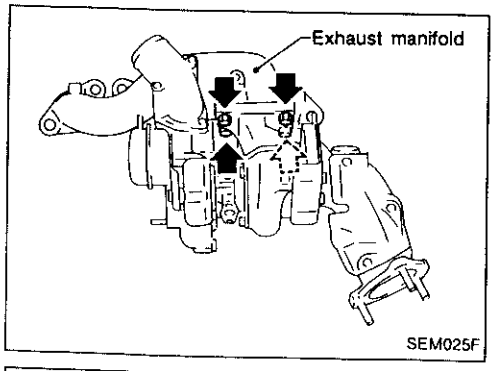

3. Remove exhaust manifold.

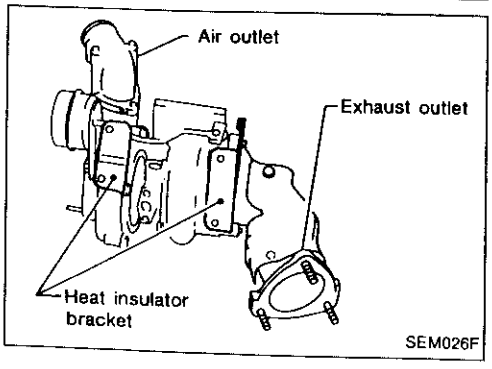

4. Remove exhaust outlet, air outlet and heat insulator brackets.

Inspection

Perform the following checks. If NG, replace turbocharger unit.

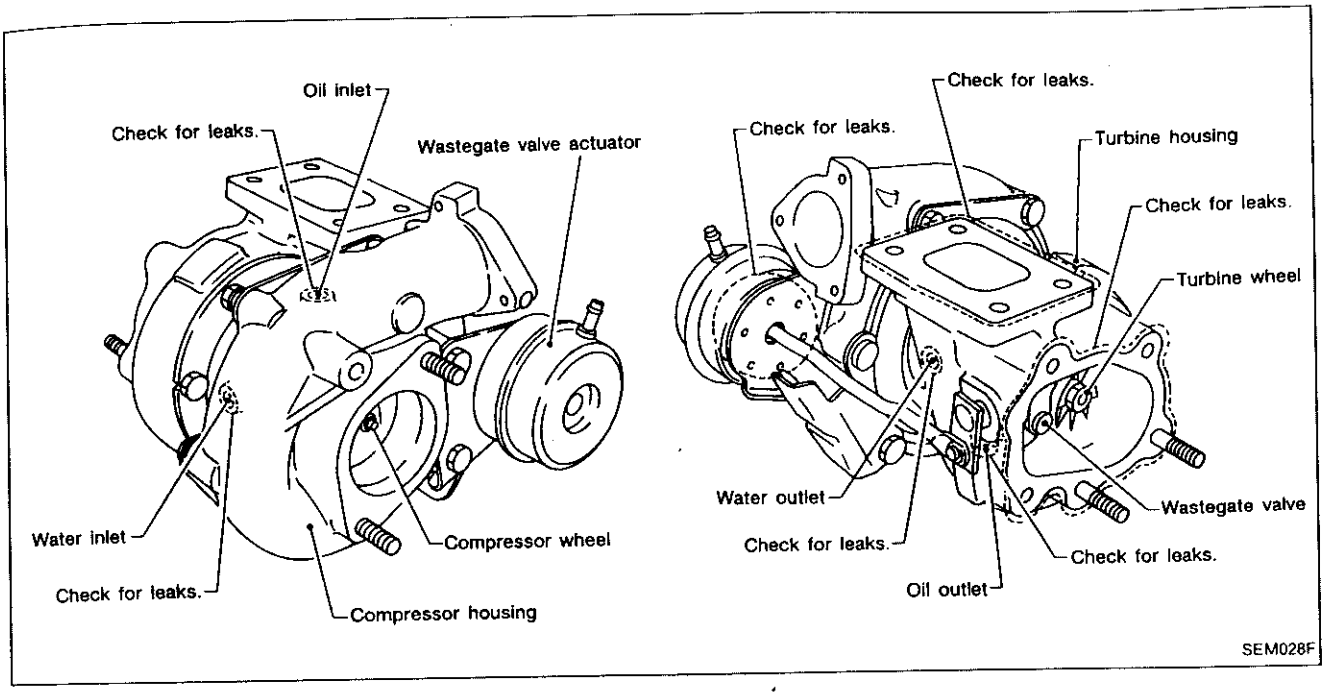

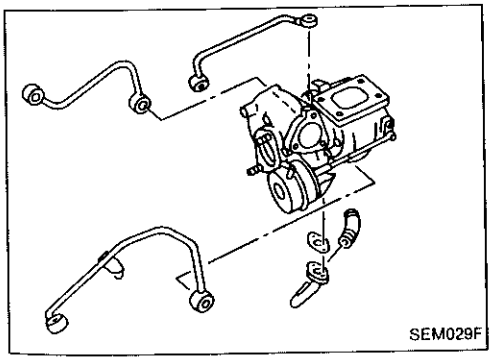

OIL AND WATER TUBES

Check tubes for clogging.

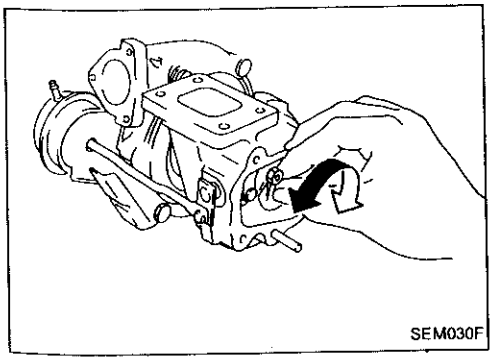

ROTOR SHAFT

1. Check rotor shaft for smooth rotation.

Inspection (Cont'd)

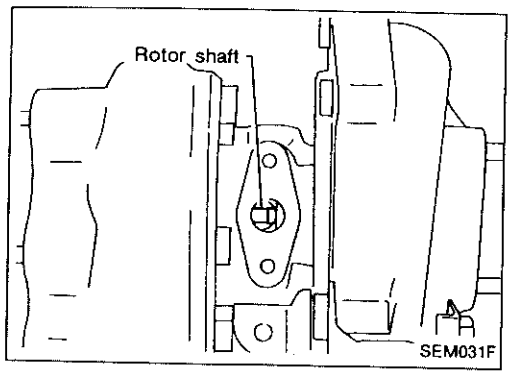

2. Check rotor shaft for carbon deposits.

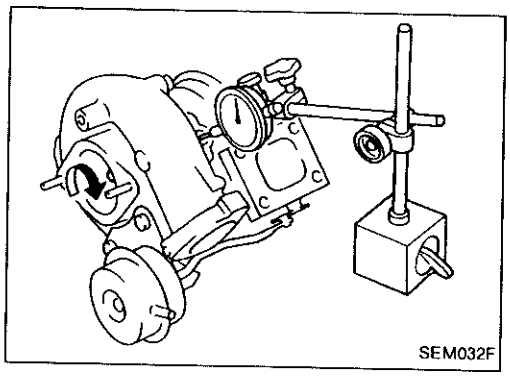

3. Measure rotor shaft runout.
   Runout (Total indicator reading):
   Standard
   0.056 - 0.127 mm (0.0022 - 0.0050 in)

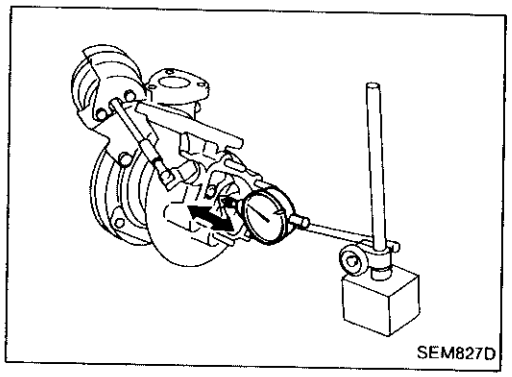

4. Measure rotor shaft end play.
   End play:
   Standard
   0.013 - 0.097 mm (0.0005 - 0.0038 in)

- **Do not allow wheels to turn when axial play is being measured.**

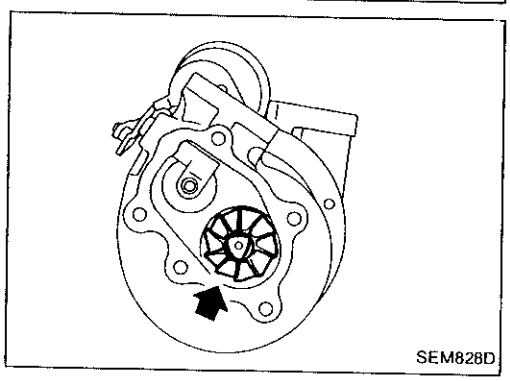

TURBINE WHEEL

Check turbine wheel for the following.

- Oil
- Carbon deposits
- Deformed fins
- Contact with turbine housing

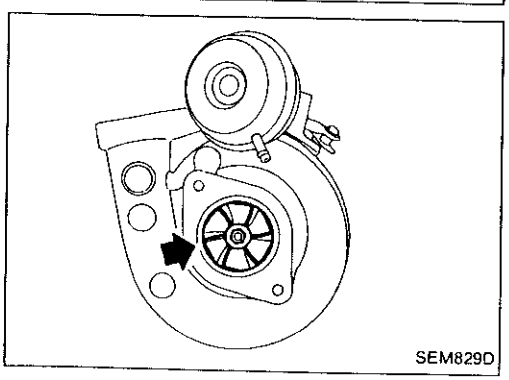

COMPRESSOR WHEEL

Check compressor wheel for the following.

- Oil
- Deformed fins
- Contact with compressor housing

Inspection (Cont'd)

WASTEGATE VALVE

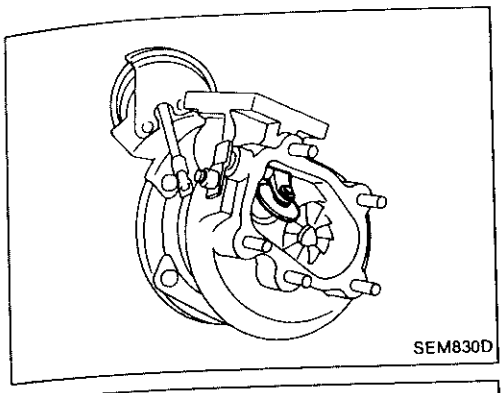
SEM830D

Remove rod pin and check wastegate valve for cracks, deformation and smooth movement. Check valve seat surface for smoothness.

WASTEGATE VALVE ACTUATOR

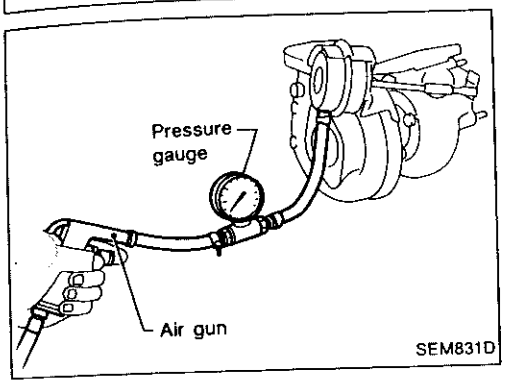

SEM831D

Apply compressed air to wastegate valve actuator and check it for smooth movement.

- **Do not applying compressed air to the actuator continuously.**
- **The air pressure should be in the range of 38.7 to 44.0 kPa (387 to 440 mbar, 290 to 330 mmHg, 11.42 to 12.99 inHg).**

Assembly

Assembly is the reverse order of disassembly.

- Install gasket between exhaust manifold and turbocharger with lappet side facing exhaust manifold.

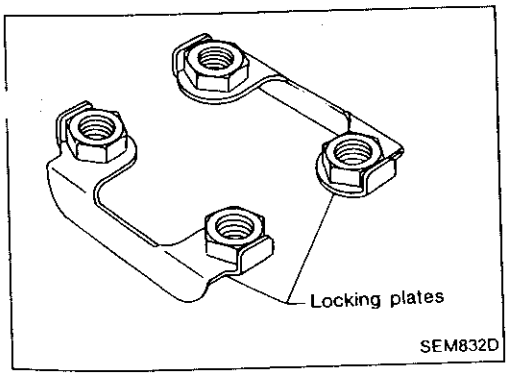

SEM832D

- Bend locking plates along the side of turbocharger fastening nuts.

Installation

1. Install exhaust manifold fixing nuts.

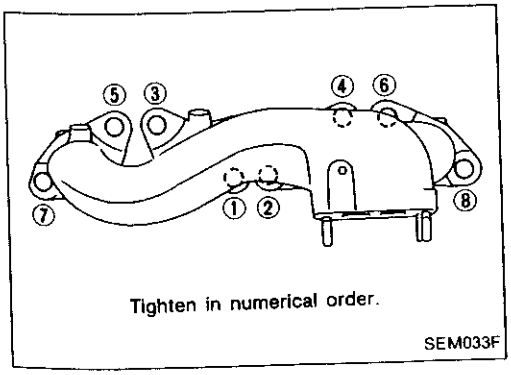

Tighten in numerical order.
SEM033F

Installation (Cont'd)

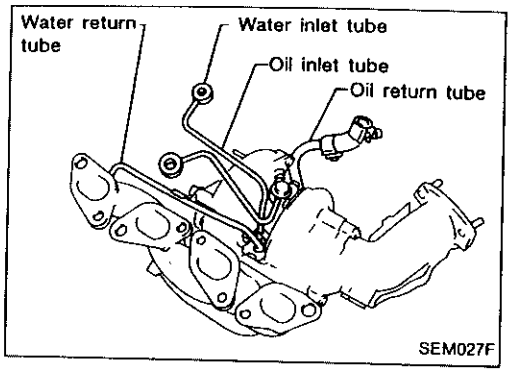

2. Installation is the reverse order of removal.
- Install oil tubes and water tubes in the following order, aligning the mating marks.
  a. Oil feed tube
  b. Water return tube
  c. Water feed tube
  d. Oil return tube

SEC. 112•111

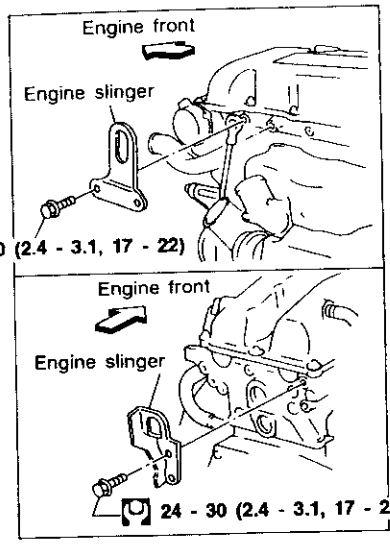

M/T model

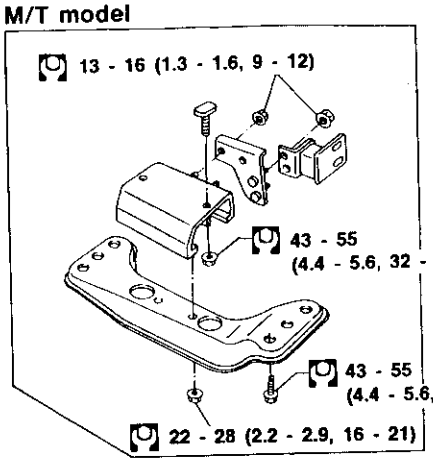

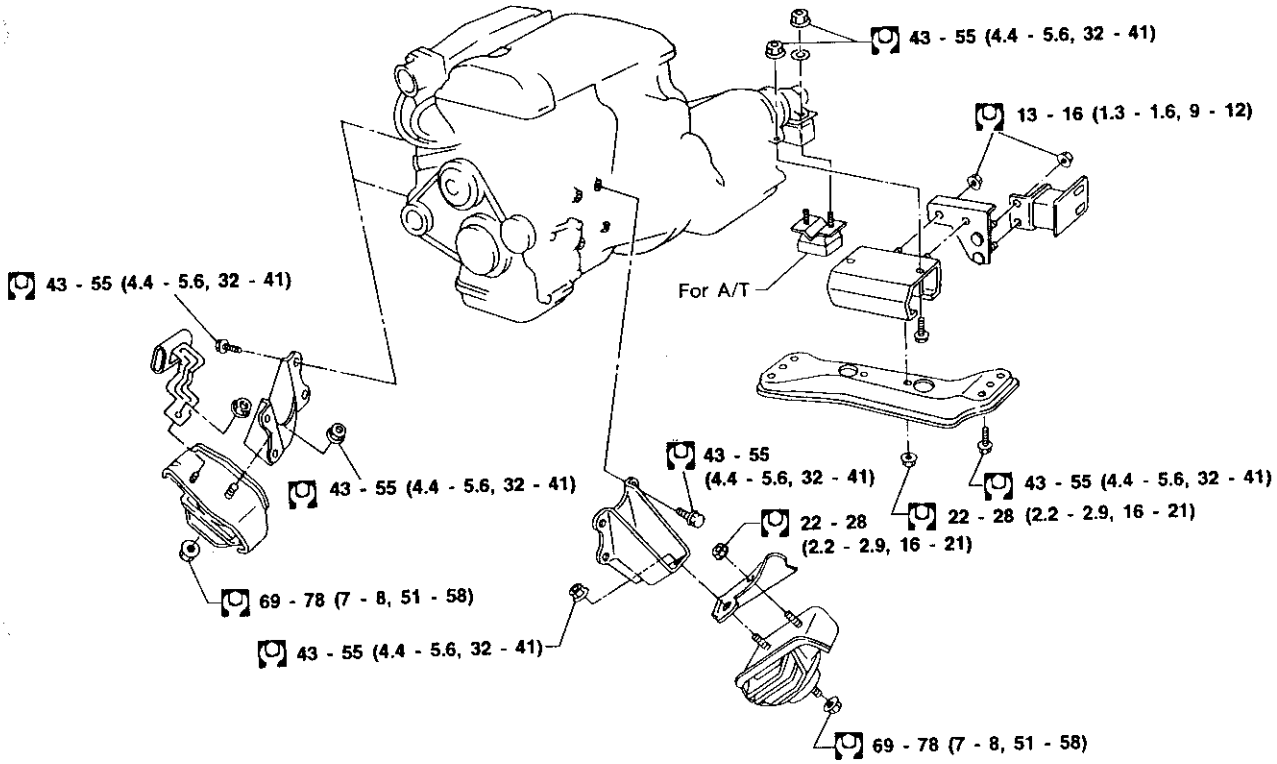

: N•m (kg-m, ft-lb)

SEM034F

WARNING:

- **Situate vehicle on a flat and solid surface.**
- **Place chocks at front and back of rear wheels.**
- **Do not remove engine until exhaust system has completely cooled off.**
  Otherwise, you may burn yourself and/or fire may break out in fuel line.
- **For safety during subsequent steps, the tension of wires should be slackened against the engine.**
- **Before disconnecting fuel hose, release fuel pressure from fuel line.**
  Refer to "Releasing Fuel Pressure" in EC section.
- **Be sure to hoist engine and transmission in a safe manner.**
- **For engines not equipped with engine slingers, attach proper slingers and bolts described in PARTS CATALOG.**

CAUTION:

- **When lifting engine, be sure to clear surrounding parts. Take special care for accelerator wire casing, brake lines and brake master cylinder.**
- **In hoisting the engine, always use engine slingers in a safe manner.**

Removal

1. Remove transmission.
Refer to AT or MT section.
2. Remove engine under cover and hood.
3. Drain coolant from both cylinder block drain plug, and radiator drain cock.
4. Drain engine oil from drain plug of oil pan.
5. Remove vacuum hoses, fuel tubes, wires, harness and connectors and so on.
6. Remove front exhaust tubes.
7. Remove radiator and shroud.
8. Remove drive belts.
9. Remove A/C compressor and power steering oil pump from engine.
10. Install engine slingers to cylinder head.
11. Set a suitable hoist on engine slinger.
12. Remove engine mounting bolts from both sides and then slowly raise engine.

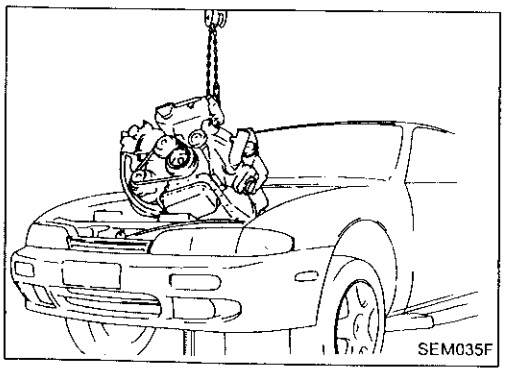

13. Remove engine as shown.

Installation

Installation is in the reverse order of removal.

SEC.110•120

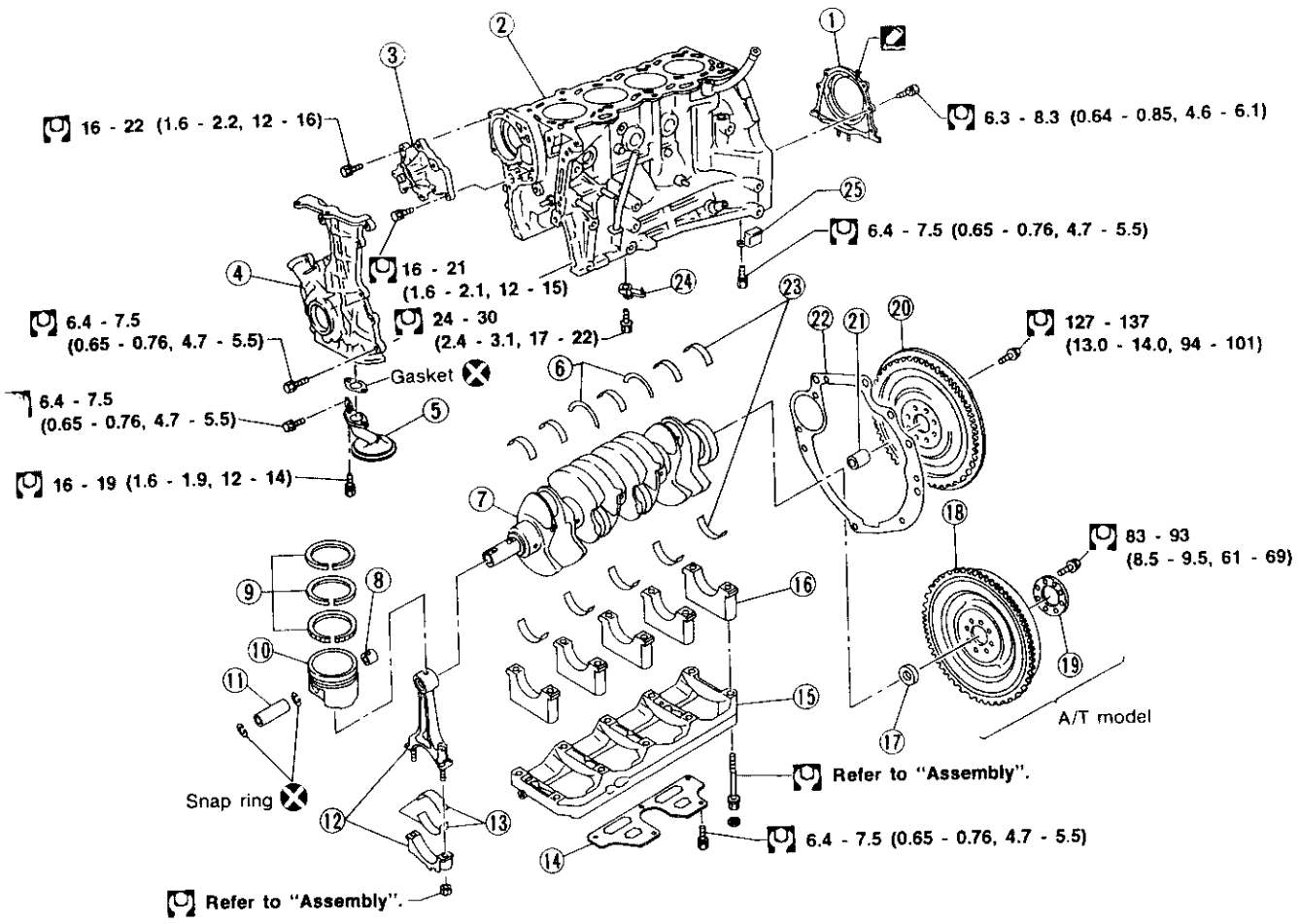

: Apply liquid gasket
: N•m (kg-m, ft-lb)

SEM036F

① Rear oil seal retainer
② Cylinder block
③ Water pump
④ Front cover with oil pump
⑤ Oil strainer
⑥ Thrust bearing
⑦ Crankshaft
⑧ Connecting rod bushing
⑨ Piston rings
⑩ Piston
⑪ Piston pin
⑫ Connecting rod
⑬ Connecting rod bearing
⑭ Baffle plate
⑮ Main bearing beam
⑯ Main bearing cap
⑰ Pilot converter
⑱ Drive plate
⑲ Reinforcement plate
⑳ Flywheel
㉑ Pilot bushing
㉒ Rear plate
㉓ Main bearing
㉔ Oil jet
㉕ Baffle plate

CAUTION:

- **When installing bearings, pistons, or other sliding parts, lubricate contacting surfaces with new engine oil.**
- **Place removed parts such as bearings and bearing caps in their proper order and direction.**
- **When installing connecting rod nuts, and main bearing cap bolts, apply new engine oil to threads and seating surfaces.**

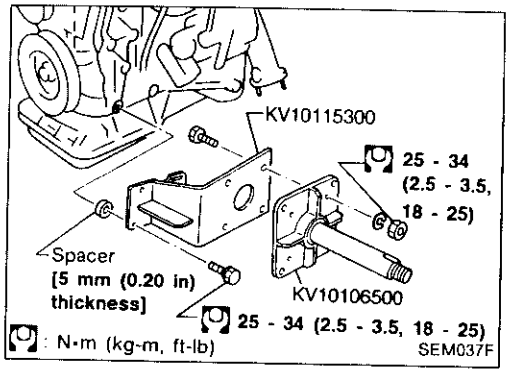

Disassembly

PISTON AND CRANKSHAFT

1. Remove engine.
   Refer to "ENGINE REMOVAL" (EM-55).
2. Remove compressor bracket and engine mounting bracket, then install engine on engine stand (ST0501S000).
3. Remove cylinder head.
   Refer to "Removal" in "TIMING CHAIN" (EM-20).
4. Remove oil pan.
   Refer to "Removal" in "OIL PAN" (EM-13).
5. Remove timing chain.
   Refer to "Removal" in "TIMING CHAIN" (EM-20).

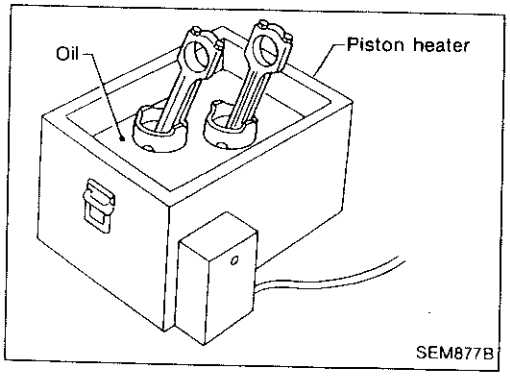

6. Remove pistons with connecting rods.
   - When disassembling piston and connecting rod, remove snap ring first. Then heat piston to 60 to 70°C (140 to 158°F), or use piston pin press stand at room temperature.
7. Remove rear oil seal retainer.

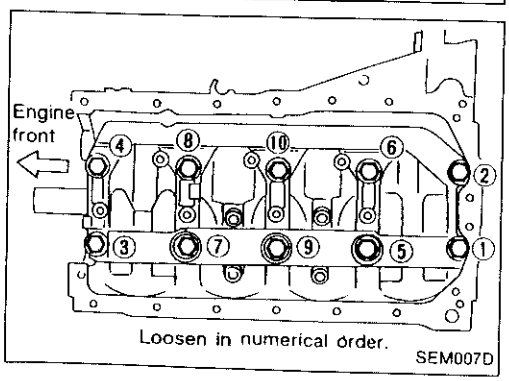

8. Remove bearing beam, bearing cap and crankshaft.
   - **Before removing bearing cap, measure crankshaft end play.**
   - **Bolts should be loosened in two or three steps.**

Disassembly (Cont'd)

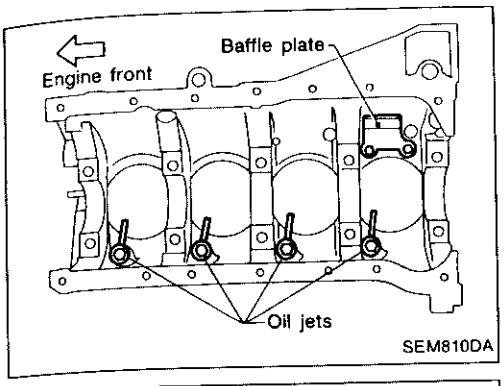

9. Remove baffle plate.
10. Remove oil jets.

Inspection

PISTON AND PISTON PIN CLEARANCE

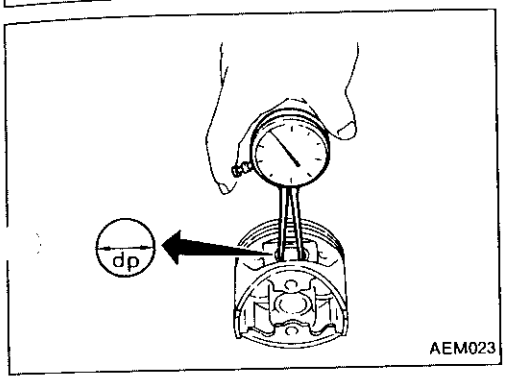

1. Measure inner diameter of piston pin hole "dp".
   Standard diameter "dp":
   21.987 - 21.999 mm (0.8656 - 0.8661 in)

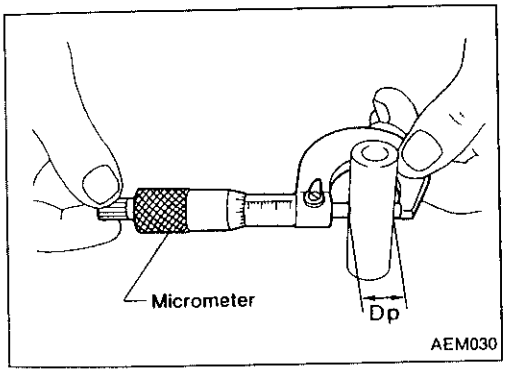

2. Measure outer diameter of piston pin "Dp".
   Standard diameter "Dp":
   21.989 - 22.001 mm (0.8657 - 0.8662 in)
3. Calculate piston pin clearance.
   dp – Dp = –0.004 to 0 mm (–0.0002 to 0 in)
   If it exceeds the above value, replace piston assembly with pin.

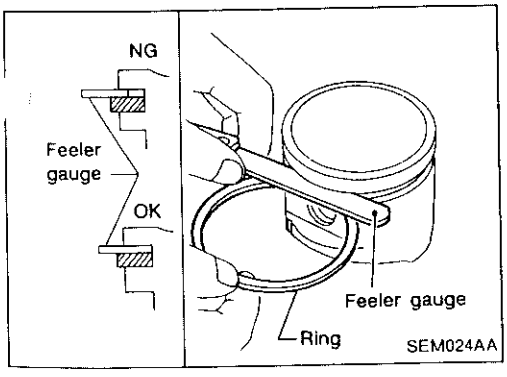

PISTON RING SIDE CLEARANCE

Side clearance:
Top ring
0.045 - 0.080 mm (0.0018 - 0.0031 in)
2nd ring
0.030 - 0.065 mm (0.0012 - 0.0026 in)
Max. limit of side clearance:
0.1 mm (0.004 in)

If out of specification, replace piston and/or piston ring assembly.

Inspection (Cont'd)

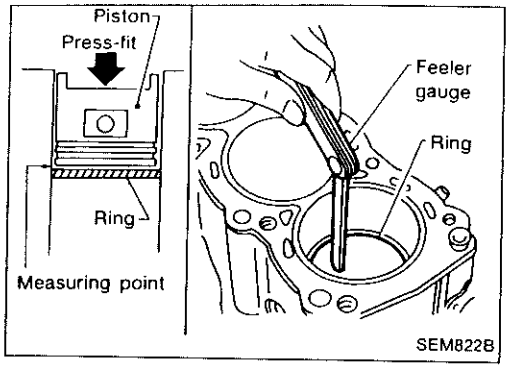

PISTON RING END GAP

Top ring:
Standard
0.20 - 0.30 mm (0.0079 - 0.0118 in)
Limit
0.39 mm (0.0154 in)

2nd ring:
Standard
0.35 - 0.50 mm (0.0138 - 0.0197 in)
Limit
0.59 mm (0.0232 in)

Oil ring:
Standard
0.20 - 0.60 mm (0.0079 - 0.0236 in)
Limit
0.60 mm (0.0272 in)

If out of specification, replace piston ring. If gap exceeds maximum limit with new ring, rebore cylinder and use oversize piston and piston rings.
Refer to SDS (EM-78).

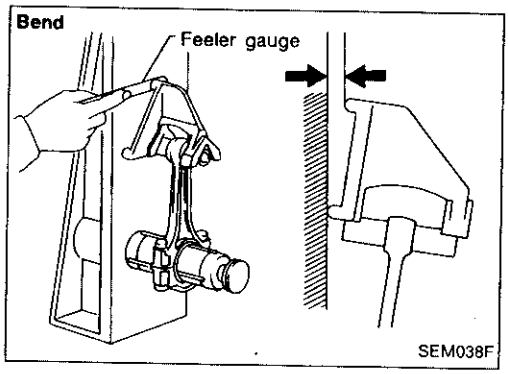

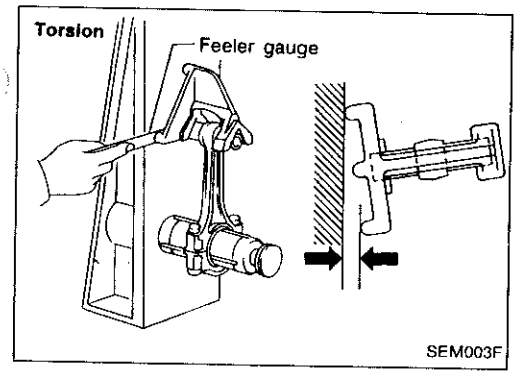

CONNECTING ROD BEND AND TORSION

Bend:
Limit 0.15 mm (0.0059 in)
per 100 mm (3.94 in) length

Torsion:
Limit 0.30 mm (0.0118 in)
per 100 mm (3.94 in) length

If it exceeds the limit, replace connecting rod assembly.

Inspection (Cont'd)

CYLINDER BLOCK DISTORTION AND WEAR

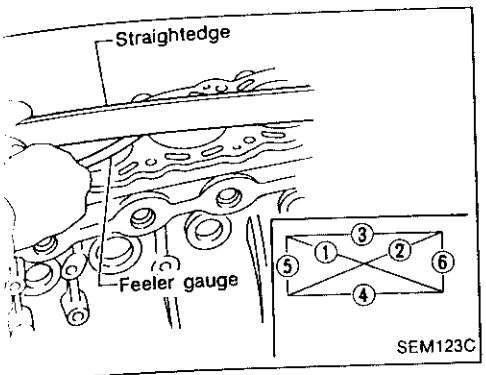

1. Clean upper face of cylinder block and measure the distortion in the directions as shown.
   Standard:
   Less than 0.03 mm (0.0012 in)
   Limit:
   0.10 mm (0.0039 in)
2. If out of specification, resurface it.
   The resurfacing limit is determined by cylinder head resurfacing in engine.

Amount of cylinder head resurfacing is "A".
Amount of cylinder block resurfacing is "B".
The maximum limit is as follows:
A + B = 0.2 mm (0.008 in)
Nominal cylinder block height from crankshaft center:
211.25 - 211.35 mm (8.3169 - 8.3208 in)

3. If necessary, replace cylinder block.

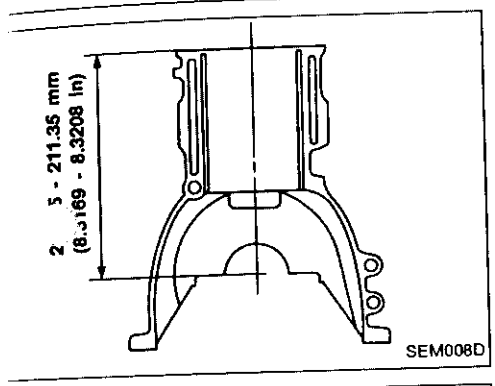

PISTON-TO-BORE CLEARANCE

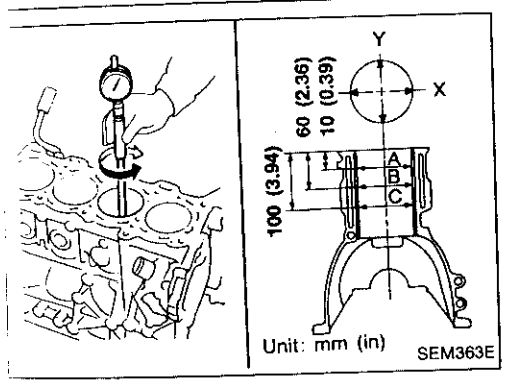

1. Using a bore gauge, measure cylinder bore for wear, out-of-round and taper.
   Standard inner diameter:
   86.000 - 86.030 mm (3.3858 - 3.3870 in)
   Wear limit:
   0.20 mm (0.0079 in)
   If it exceeds the limit, rebore all cylinders. Replace cylinder block if necessary.
   Out-of-round (X – Y) standard:
   0.015 mm (0.0006 in)
   Taper (A – B and A – C) standard:
   0.010 mm (0.0004 in)

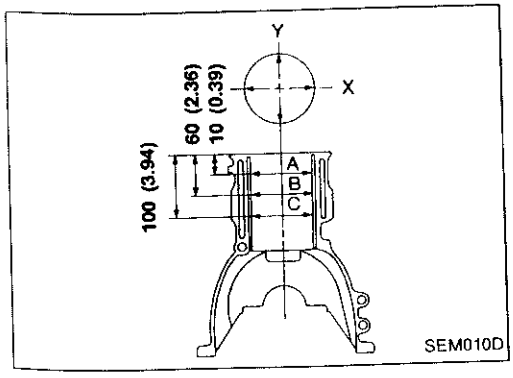

2. Check for scratches and seizure. If seizure is found, hone it.

Inspection (Cont'd)

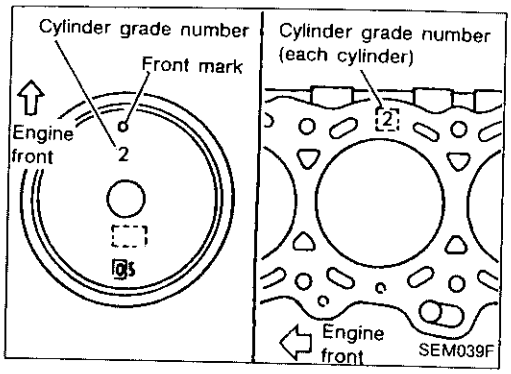

- **If cylinder block or piston is replaced, match piston grade with grade number on cylinder block upper surface.**

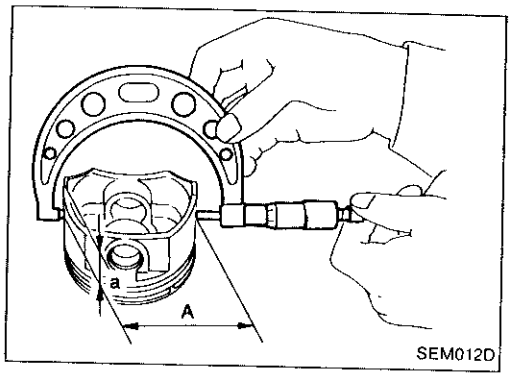

3. Measure piston skirt diameter.
   Piston diameter "A":
   Refer to SDS (EM-78).
   Measuring point "a" (Distance from the bottom):
   10.5 mm (0.413 in)
4. Check that piston-to-bore clearance is within specification.
   Piston-to-bore clearance "B":
   0.010 - 0.030 mm (0.0004 - 0.0012 in)
5. Determine piston oversize according to amount of cylinder wear.

Oversize pistons are available for service. Refer to SDS (EM-78).

6. Cylinder bore size is determined by adding piston-to-bore clearance to piston diameter "A".
   Rebored size calculation:
   D = A + B – C
   where,
   D: Bored diameter
   A: Piston diameter as measured
   B: Piston-to-bore clearance
   C: Honing allowance 0.02 mm (0.0008 in)
7. Install main bearing caps and tighten bolts to the specified torque. This will prevent distortion of cylinder bores.
8. Cut cylinder bores.

- **When any cylinder needs boring, all other cylinders must also be bored.**
- **Do not cut too much out of cylinder bore at a time. Cut only 0.05 mm (0.0020 in) or so in diameter at a time.**

9. Hone cylinders to obtain specified piston-to-bore clearance.
10. Measure finished cylinder bore for out-of-round and taper.

- **Measurement should be done after cylinder bore cools down.**

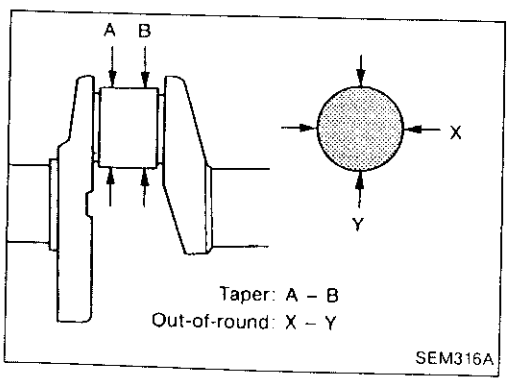

CRANKSHAFT

1. Check crankshaft main and pin journals for score, wear or cracks.
2. With a micrometer, measure journals for taper and out-of-round.

Unit: mm (in)

Out-of-round (X – Y) and Taper (A – B)	Main journal	Less than 0.005 (0.0002)
	Pin journal	Less than 0.0025 (0.0001)

Inspection (Cont'd)

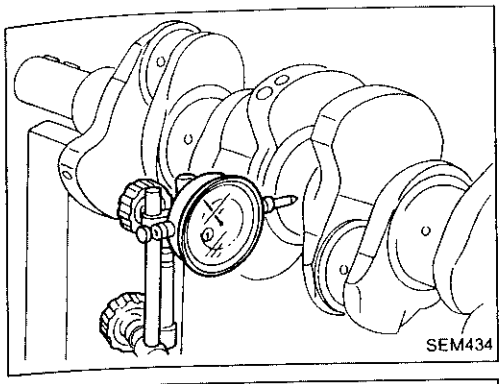

3. Measure crankshaft runout.
   Runout (Total indicator reading):
   Less than 0.05 mm (0.0020 in)

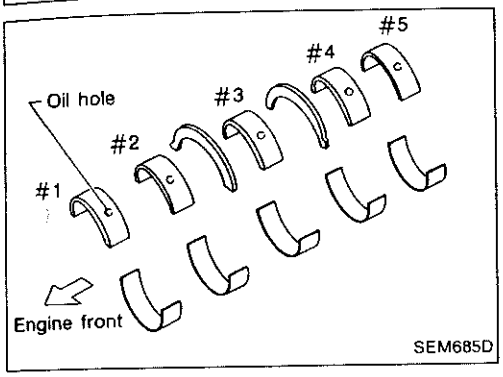

BEARING CLEARANCE

- Use Method A or Method B. Method A is preferred because it is more accurate.

Method A (Using bore gauge & micrometer)

Main bearing

1. Set main bearings in their proper positions on cylinder block and main bearing cap.

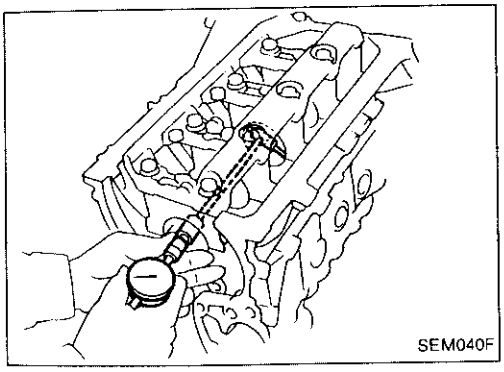

2. Install main bearing cap and main bearing beam to cylinder block.

Tighten all bolts in specified procedure. Refer to "CRANKSHAFT" in "Cylinder Block Assembly" (EM-68).

3. Measure inner diameter "A" of each main bearing.

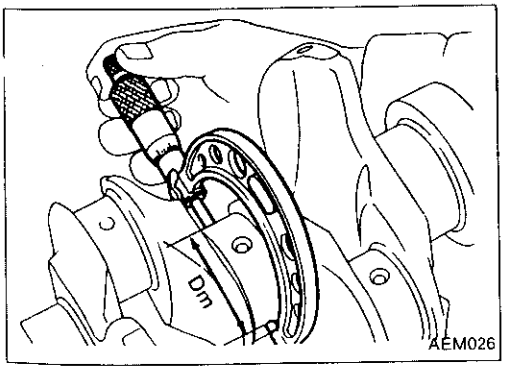

4. Measure outer diameter "Dm" of each crankshaft main journal.
5. Calculate main bearing clearance.
   Main bearing clearance = A – Dm
   Standard: 0.004 - 0.022 mm (0.0002 - 0.0009 in)
   Limit: 0.050 mm (0.0020 in)
6. If it exceeds the limit, replace bearing.
7. If clearance cannot be adjusted within the standard of any bearing, grind crankshaft journal and use undersized bearing.

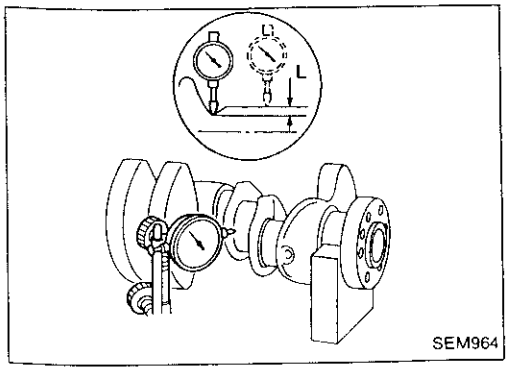

a. When grinding crankshaft journal, confirm that "L" dimension in fillet roll is more than the specified limit.
   "L": 0.1 mm (0.004 in)
b. Refer to SDS for grinding crankshaft and available service parts (EM-80).

Special Service Tools

Tool number Tool name	Description	
KV38100800 Differential attachment	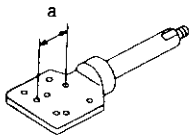 NT119	Mounting final drive (To use, make a new hole.) **a: 152 mm (5.98 in)**
ST3090S000 Drive pinion rear inner race puller set ① ST30031000 Puller ② ST30901000 Base	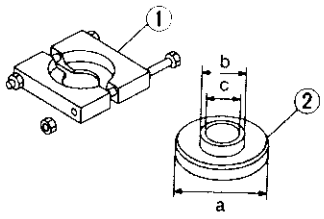 NT527	Removing and installing drive pinion rear cone **a: 79 mm (3.11 in) dia.** **b: 45 mm (1.77 in) dia.** **c: 35 mm (1.38 in) dia.**
ST3306S001 Differential side bearing puller set ① ST3305S001 Body ② ST33061000 Adapter	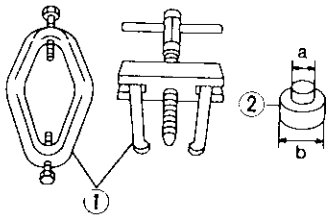 NT072	Removing and installing differential side bearing inner cone **a: 28.5 mm (1.122 in) dia.** **b: 38 mm (1.50 in) dia.**
ST30611000 Drift	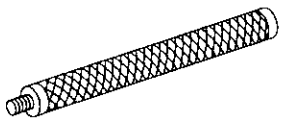 NT090	Installing pinion rear bearing outer race
ST30613000 Drift	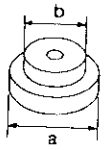 NT073	Installing pinion front bearing outer race **a: 72 mm (2.83 in) dia.** **b: 48 mm (1.89 in) dia.**
ST30621000 Drift	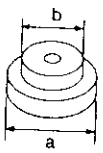 NT073	Installing pinion rear bearing outer race **a: 79 mm (3.11 in) dia.** **b: 59 mm (2.32 in) dia.**

Special Service Tools (Cont'd)

Tool number Tool name	Description	
KV38100200 Gear carrier side oil seal drift	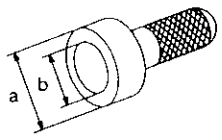 NT115	Installing side oil seal **a: 65 mm (2.56 in) dia.** **b: 49 mm (1.93 in) dia.**
KV38100500 Gear carrier front oil seal drift	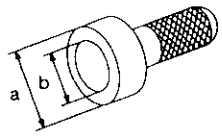 NT115	Installing front oil seal **a: 85 mm (3.35 in) dia.** **b: 60 mm (2.36 in) dia.**
KV38100300 Differential side bearing inner cone	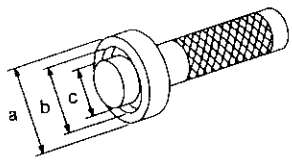 NT085	Installing side bearing inner cone **a: 54 mm (2.13 in) dia.** **b: 46 mm (1.81 in) dia.** **c: 32 mm (1.26 in) dia.**
KV38100600 Side bearing spacer drift	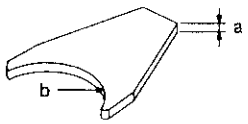 NT528	Installing side bearing spacer **a: 8 mm (0.31 in)** **b: R42.5 mm (1.673 in)**
ST3127S000 Preload gauge ① GG91030000 Torque wrench ② HT62940000 Socket adapter ③ HT62900000 Socket adapter	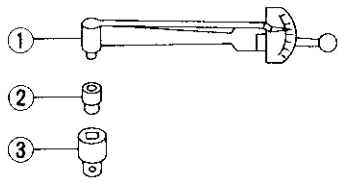 NT124	Measuring pinion bearing preload and total preload
HT72400000 Slide hammer	 NT125	Removing differential case assembly

Special Service Tools (Cont'd)

Tool number Tool name	Description	
KV381039S0 Drive pinion height setting gauge ① KV38103910 Dummy shaft ② KV38100120 Height gauge ③ KV38100140 Stopper	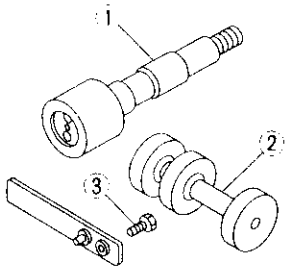 NT226	Selecting pinion height adjusting washer
KV38107900 Side oil seal protector	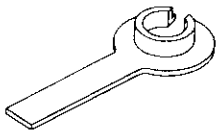 NT129	Installing final drive side flange

Commercial Service Tool

Tool name	Description	
Drive pinion flange wrench	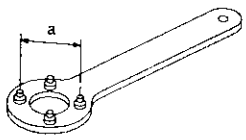 NT355	Removing and installing propeller shaft lock nut, and drive pinion lock nut. **a: 81.25 mm (3.1988 in)**

SEC. 370
3S71A

M/T model

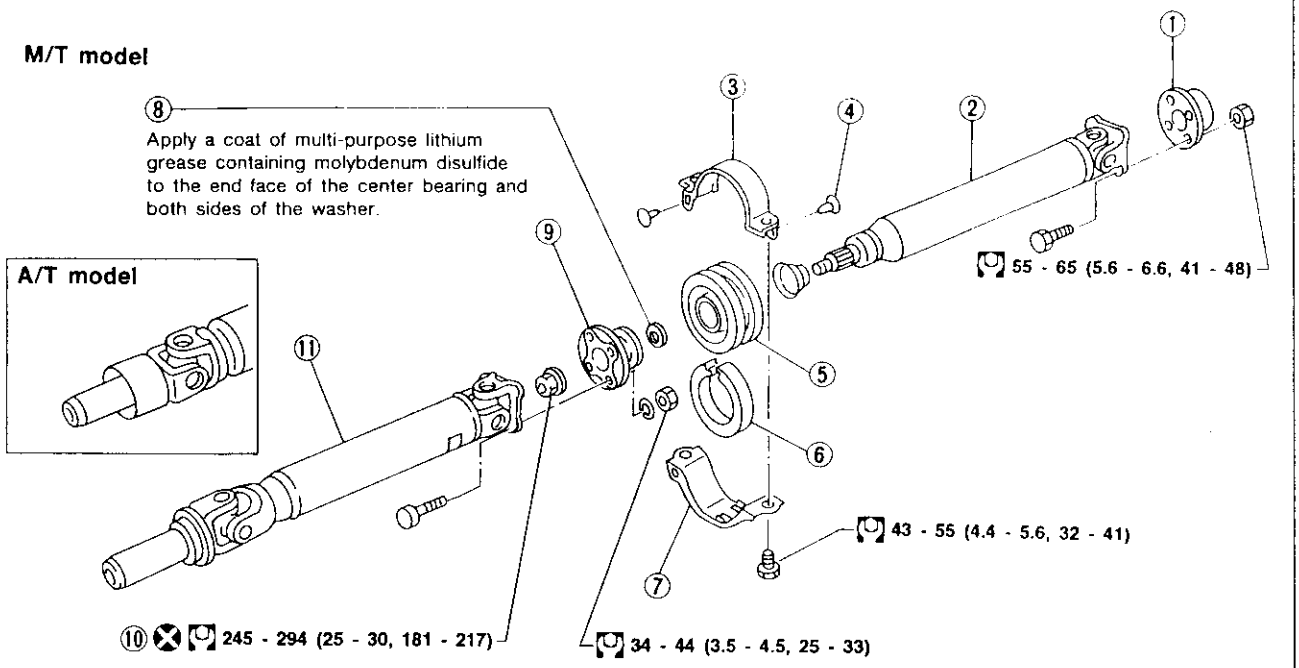

① Final drive companion flange
② Propeller shaft 2nd tube
③ Center bearing upper mounting bracket
④ Clip
⑤ Center bearing
⑥ Center bearing cushion
⑦ Center bearing lower mounting bracket
⑧ Washer
⑨ Companion flange
⑩ Lock nut
⑪ Propeller shaft 1st tube

PD

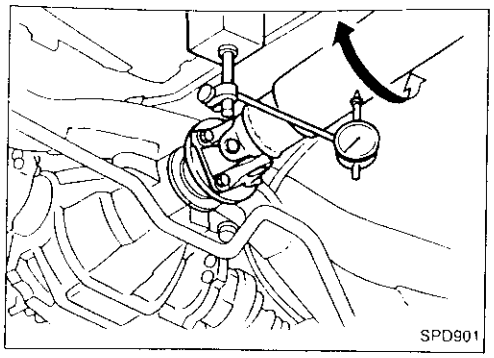
SPD901

On-vehicle Service

PROPELLER SHAFT VIBRATION

If vibration is present at high speed, inspect propeller shaft runout first.

1. Raise rear wheels.
2. Measure propeller shaft runout at indicated points by rotating final drive companion flange with hands.
   Runout limit: 0.6 mm (0.024 in)

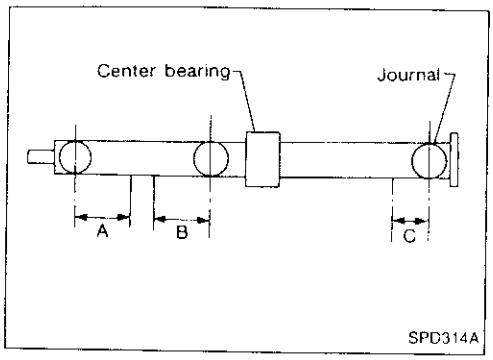

SPD314A

Propeller shaft runout measuring points:
Distance:
"A" 155 mm (6.10 in)
"B" 165 mm (6.50 in)
"C" 185 mm (7.28 in)

3. If runout exceeds specifications, disconnect propeller shaft at final drive companion flange. Then rotate companion flange 90, 180 or 270 degrees and reconnect propeller shaft.
   Runout limit: 0.6 mm (0.024 in)
4. Check runout again. If runout still exceeds specifications, replace propeller shaft assembly.
5. Perform road test.

APPEARANCE CHECKING

- Inspect propeller shaft tube surface for dents or cracks. If damaged, replace propeller shaft assembly.
- If center bearing is noisy or damaged, replace it.

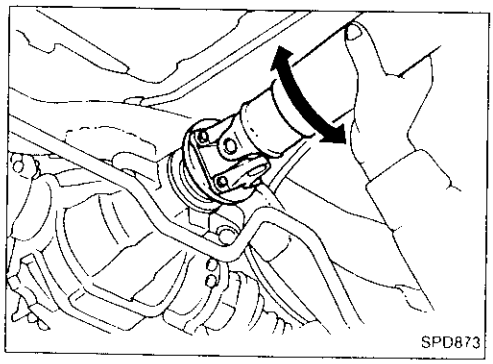
SPD873

Removal

- Draw out propeller shaft from transmission and plug up rear end of transmission rear extension housing.

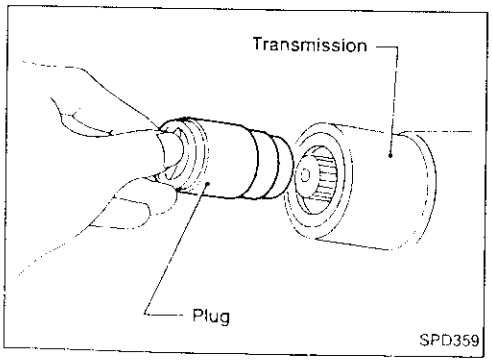

SPD359

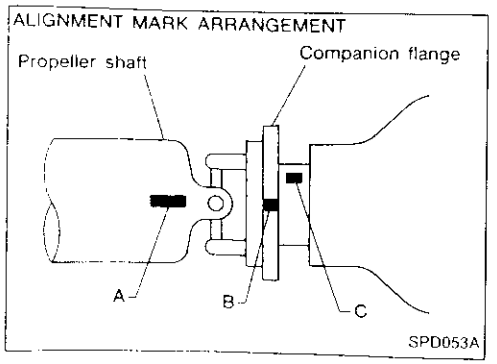

SPD053A

Installation

If companion flange has been removed, put new alignment marks B and C on it. Then reassemble using the following procedure. Perform step 4 when final drive and propeller shaft are separated from each other. Also perform step 4 when either of these parts is replaced with a new one.

Installation (Cont'd)

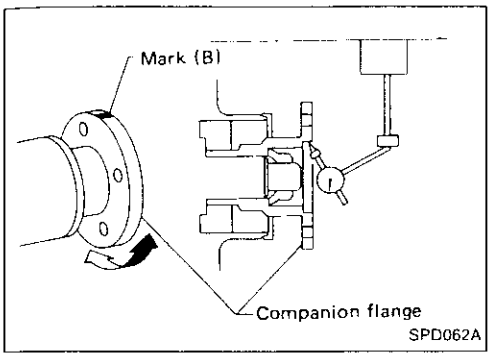

1. Erase original marks B and C from companion flange with suitable solvent.
2. Mark (B)
   A. Measure companion flange vertical runout.
   B. Determine the position where maximum runout is read on dial gauge. Put mark (shown by B in figure at left) on flange perimeter corresponding to maximum runout position.

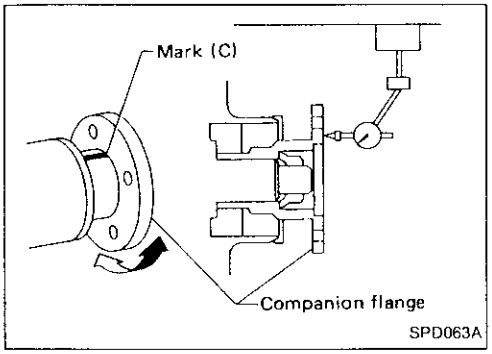

3. Mark (C)
   A. Measure companion flange surface runout.
   B. Determine the position where maximum runout is read on dial gauge. Put mark (shown by C in figure at left) on flange perimeter corresponding to maximum runout position.

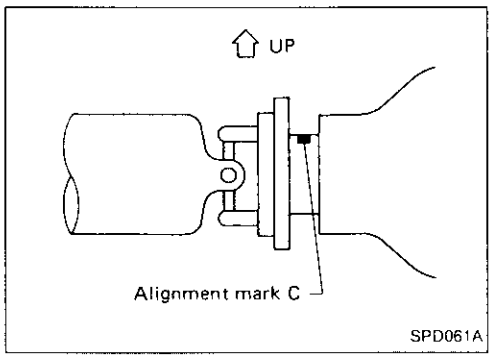

4. Position companion flange and propeller shaft using alignment marks A and B. Set the marks A and B as close to each other as possible. Temporarily attach bolts and nuts.
5. Press down propeller shaft with alignment mark C facing upward. Then tighten the lower nut to specified torque.
6. Tighten remaining nuts to specified torque.

Inspection

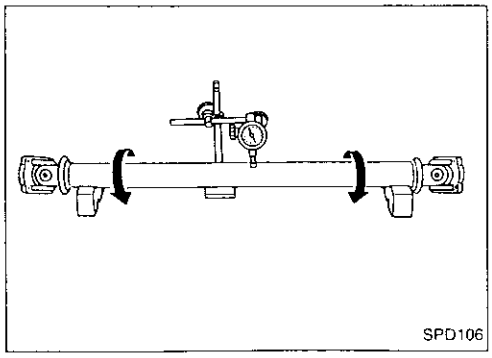

- Inspect propeller shaft runout. If runout exceeds specifications, replace propeller shaft assembly.
  Runout limit: 0.6 mm (0.024 in)

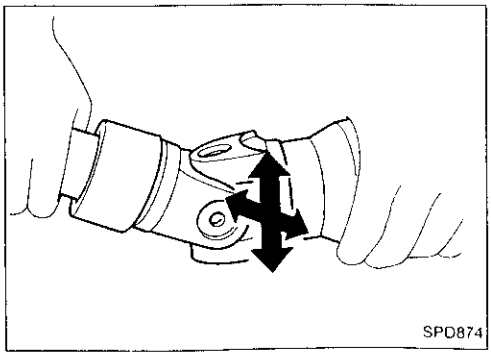

- Inspect journal axial play.
  If the play exceeds specifications, replace propeller shaft assembly.
  Journal axial play:
  0 mm (0 in)

PD

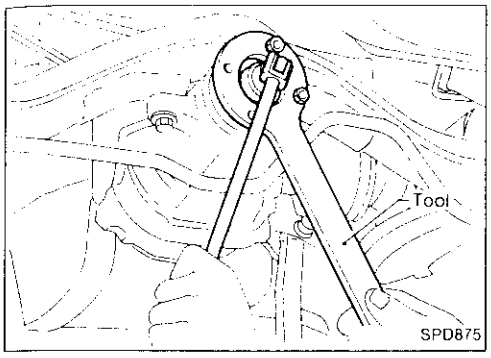

Front Oil Seal Replacement

1. Remove propeller shaft.
2. Loosen drive pinion nut with suitable tool.

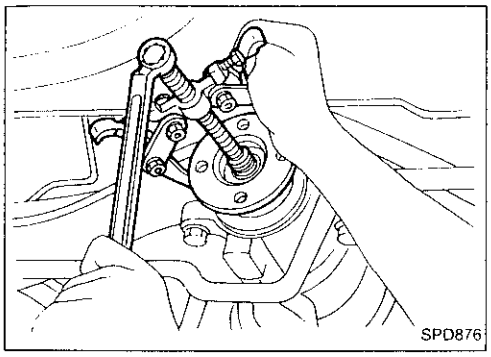

3. Remove companion flange.

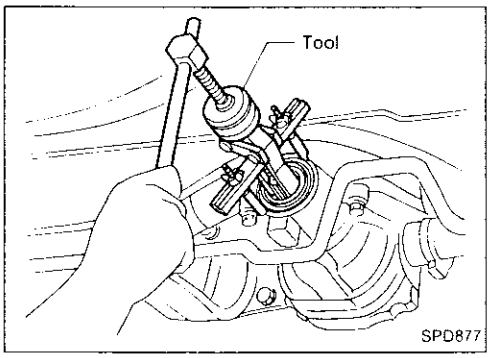

4. Remove front oil seal.

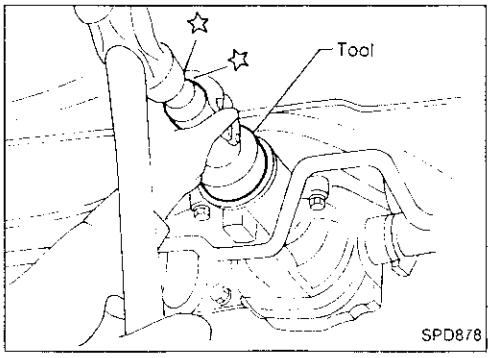

5. Apply multi-purpose grease to sealing lips of oil seal. Press front oil seal into carrier.
6. Install companion flange and drive pinion nut.
7. Install propeller shaft.

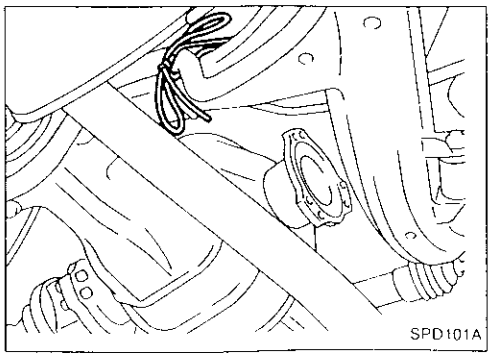

Side Oil Seal Replacement

1. Disconnect final drive side flange and drive shaft flange and suspend drive shaft flange with wire.
2. Remove final drive side flange.

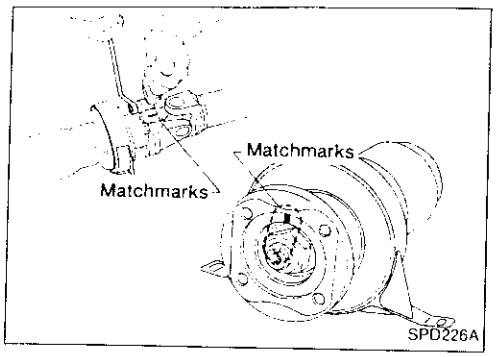

Disassembly

CENTER BEARING

1. Put matchmarks on flanges, and separate 2nd tube from 1st tube.
2. Put matchmarks on the flange and shaft.

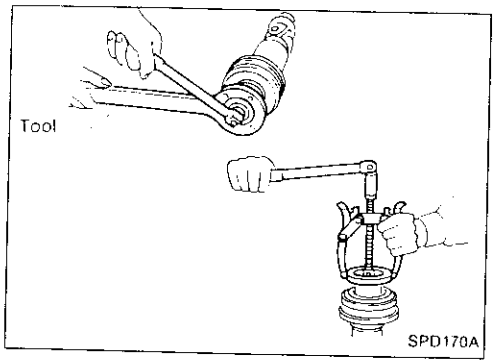

3. Remove locking nut with suitable tool.
4. Remove companion flange with puller.

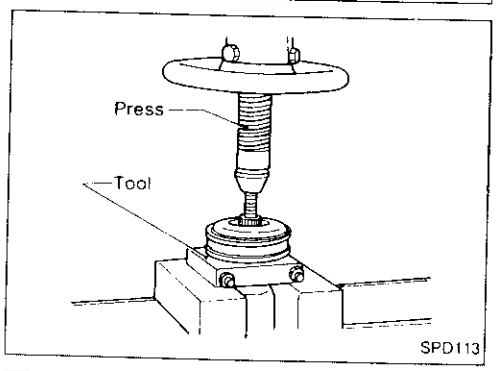

5. Remove center bearing with Tool and press.
   Tool number: ST30031000

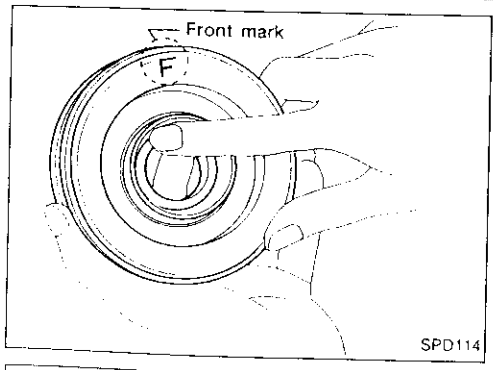

Assembly

CENTER BEARING

- When installing center bearing, position the "F" mark on center bearing toward rear of vehicle.
- **Apply a coat of grease to the end face of center bearing and both sides of washer.**
  Use multi-purpose lithium grease that contains molybdenum disulfide.

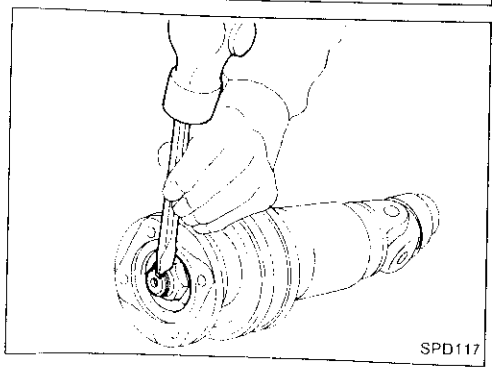

- Stake the nut. Always use new one.
- Align matchmarks when assembling tubes.

Side Oil Seal Replacement (Cont'd)

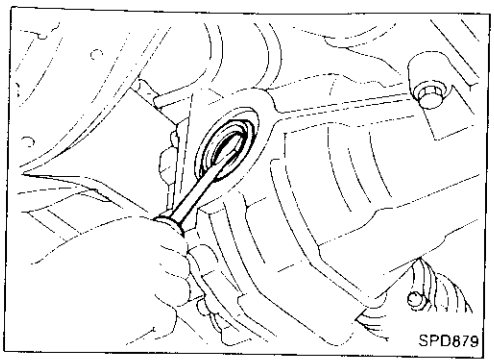

3. Remove oil seal.

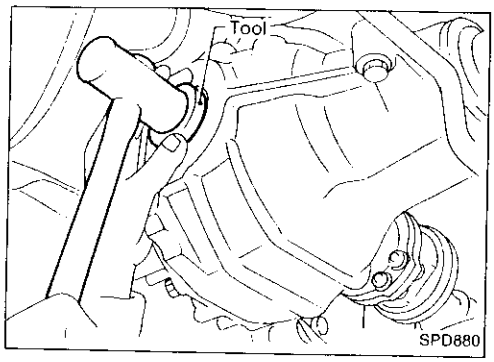

4. Apply multi-purpose grease to sealing lips of oil seal. Press-fit oil seal into carrier with Tool.
   Tool number: KV38100200

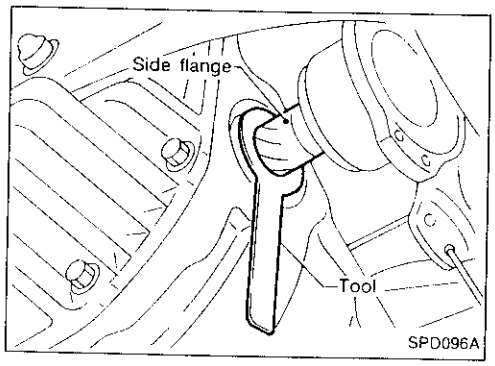

5. Install final drive side flange.
   Use Tool to prevent side oil seal from being damaged by spline portion of side flange.
   Tool number: KV38107900
6. Install drive shaft.

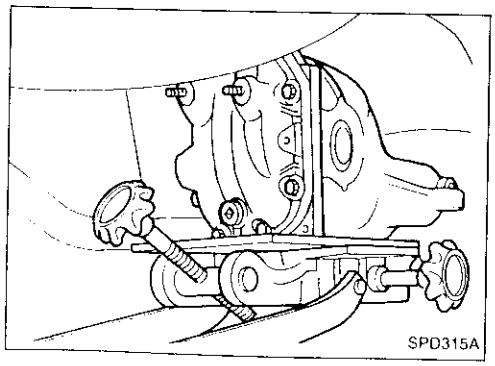

Removal

CAUTION:

Before removing the final drive assembly, disconnect the ABS sensor from the assembly. Then move it away from the final drive assembly. Failure to do so may result in damage to the sensor wires and the sensor becoming inoperative.

- Remove propeller shaft.

Plug up rear end of transmission rear extension housing.

- Remove drive shafts.
  Refer to "Drive Shaft" of "REAR AXLE" in RA section.
- Remove nuts securing final drive rear cove to suspension member.
- Support weight of final drive using jack.
- Remove final drive mounting member from front of final drive.
- Move final drive forward together with jack. Remove rear cover stud bolts from suspension member.
- Lower final drive using jack. Remove jack from rear of vehicle.

Removal (Cont'd)

CAUTION:

- **Be careful not to damage spline, sleeve yoke and front oil seal, when removing propeller shaft.**
- **After removal, support suspension member on a stand to prevent its insulators from being twisted or damaged.**

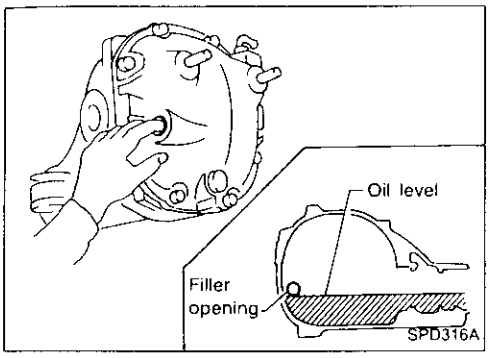

Installation

- Fill final drive with recommended gear oil.

— Models equipped with oil cooler system —

- Check oil level and for oil leakage from hoses after oil cooler has been operated.

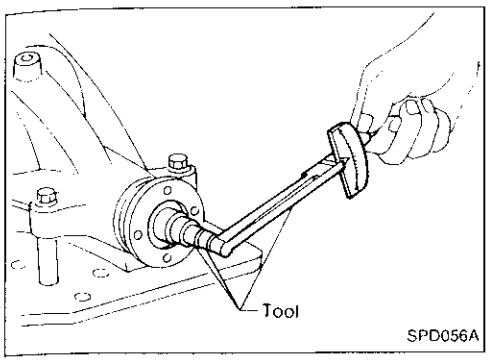

Pre-inspection

Before disassembling final drive, perform the following inspection.

- Total preload

1) Turn drive pinion in both directions several times to set bearing rollers.
2) Check total preload with Tool.
   Tool number: ST3127S000
   Total preload:
   1.4 - 3.1 N·m (14 - 32 kg-cm, 12 - 28 in-lb)

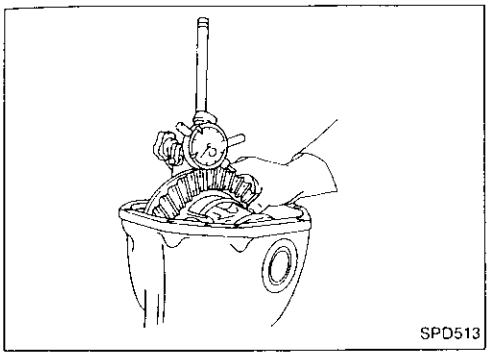

- Ring gear to drive pinion backlash
  Check ring gear-to-drive pinion backlash with a dial indicator at several points.
  Ring gear-to-drive pinion backlash:
  0.10 - 0.15 mm (0.0039 - 0.0059 in)

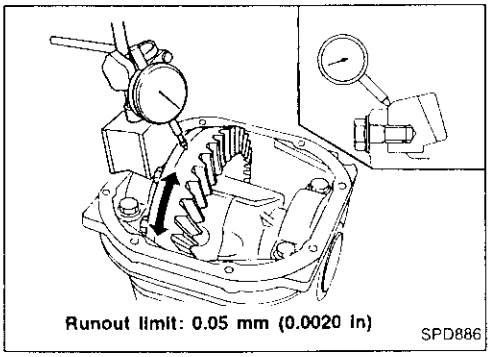

- Ring gear runout
  Check runout of ring gear with a dial indicator.
  Runout limit: 0.05 mm (0.0020 in)
- Tooth contact
  Check tooth contact. Refer to Adjustment (PD-23).

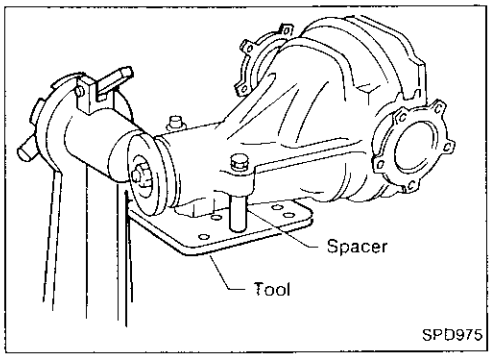

Differential Carrier

1. Using two 45 mm (1.77 in) spacers, mount carrier on Tool.
   Tool number: KV38100800

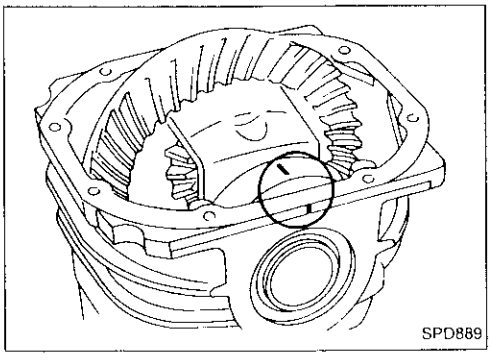

2. For proper reinstallation, paint or punch matchmarks on one side of the side bearing cap.

Bearing caps are line-board during manufacture. Replace them in their proper positions.

R200V

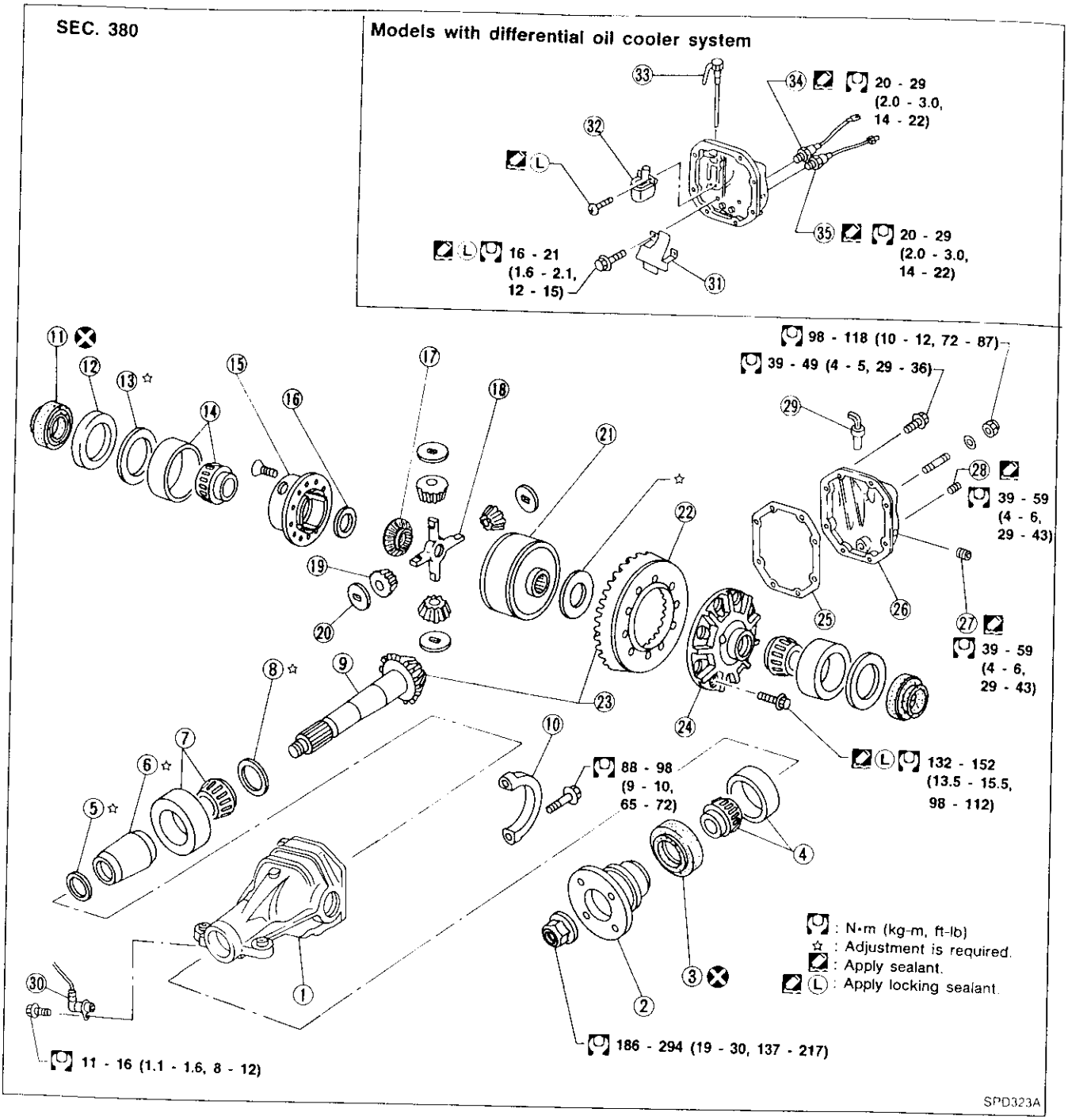

① Gear carrier
② Companion flange
③ Front oil seal
④ Pinion front bearing
⑤ Pinion bearing adjusting washer
⑥ Pinion bearing adjusting spacer
⑦ Pinion rear bearing
⑧ Pinion height adjusting washer
⑨ Drive pinion
⑩ Bearing cap
⑪ Side oil seal
⑫ Side bearing spacer
⑬ Side bearing adjusting washer
⑭ Side bearing
⑮ Differential case B
⑯ Side gear thrust washer
⑰ Side gear (RH)
⑱ Pinion mate shaft
⑲ Pinion mate gear
⑳ Pinion mate thrust washer
㉑ Side gear (LH) with viscous coupling
㉒ Ring gear
㉓ Hypoid gear set
㉔ Differential case A
㉕ Gasket
㉖ Rear cover
㉗ Filler plug
㉘ Drain plug
㉙ Breather
㉚ ABS sensor
㉛ Bracket
㉜ Oil filter
㉝ Oil outlet
㉞ Warning lamp switch
㉟ Oil temperature switch

Differential Carrier (Cont'd)

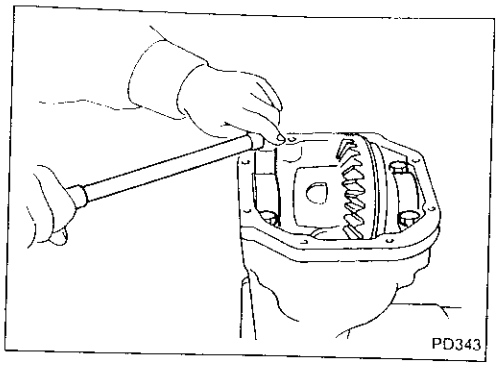

3. Remove side bearing caps.

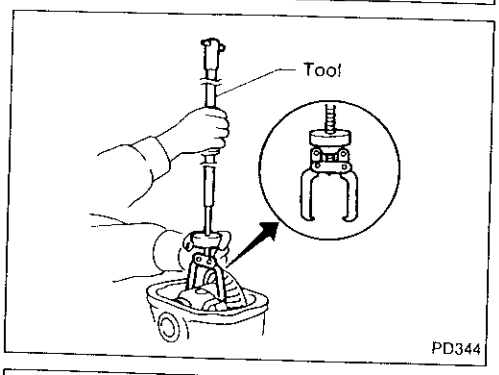

4. Lift differential case assembly out with Tool.
   Tool number: HT72400000

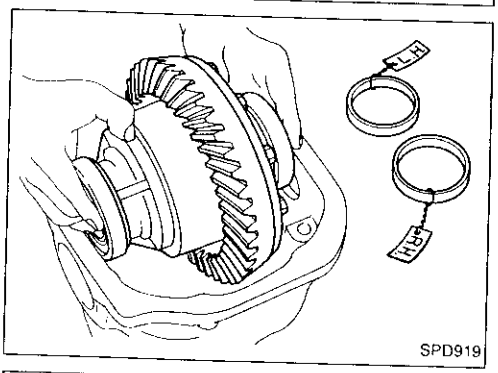

Keep the side bearing outer races together with inner cone — do not mix them up.
Also, keep side bearing spacer and adjusting shims together with bearings.

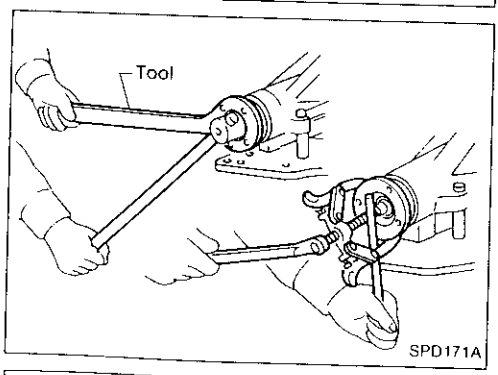

5. Loosen drive pinion nut and pull off companion flange.

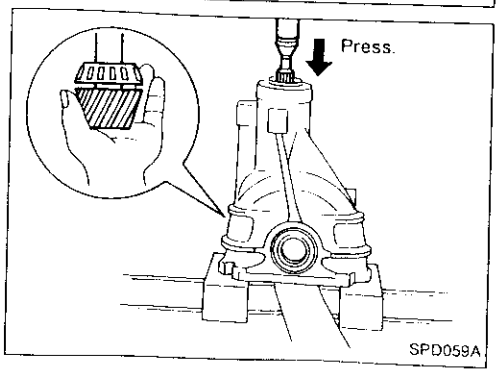

6. Take out drive pinion (together with rear bearing inner race, bearing spacer and adjusting washer).
7. Remove oil seal.
8. Remove front bearing inner race.
9. Remove side oil seal.

Differential Carrier (Cont'd)

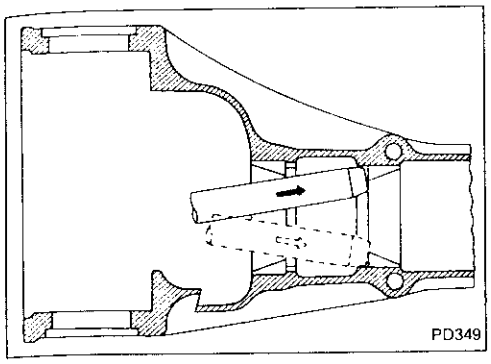

10. Remove pinion bearing outer races with a brass drift.

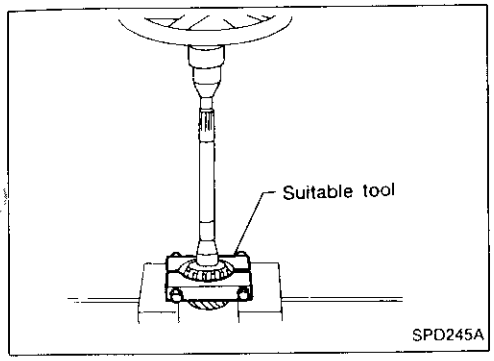

11. Remove pinion rear bearing inner race and drive pinion height adjusting washer with suitable tool.

Differential Case

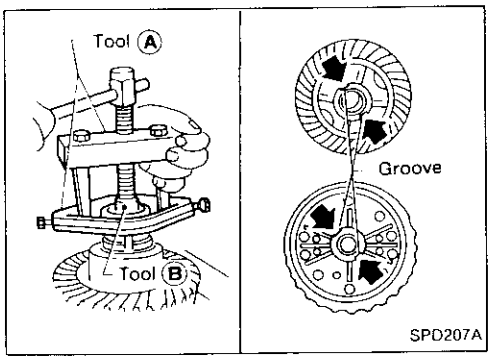

1. Remove side bearing inner cones.

To prevent damage to bearing, engage puller jaws in groove.

Tool number:

Ⓐ ST3305S001

Ⓑ ST33061000

Be careful not to confuse left- and right-hand parts. Keep bearing and bearing race for each side together.

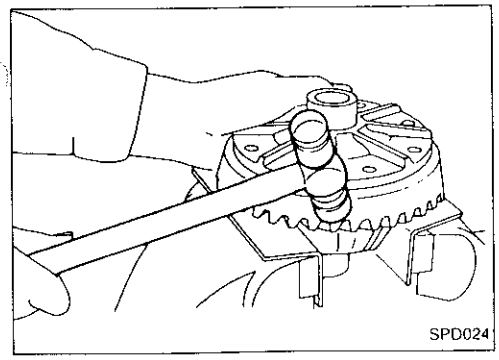

2. Loosen ring gear bolts in a criss-cross fashion.
3. Tap ring gear off the differential case with a soft hammer.

Tap evenly all around to keep ring gear from binding.

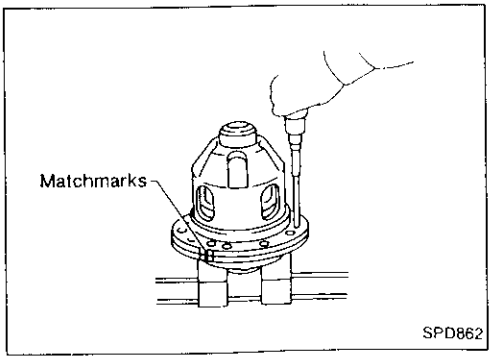

4. Loosen screws on differential cases A and B.
5. Separate differential cases A and B.

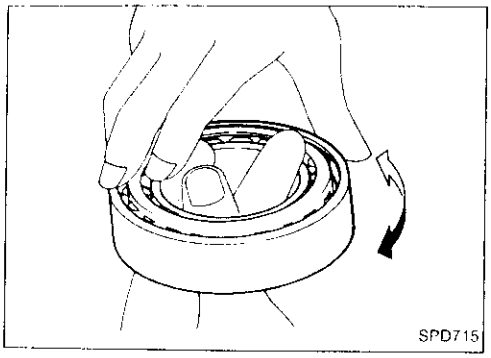

Ring Gear and Drive Pinion

Check gear teeth for scoring, cracking or chipping. If any part is damaged, replace ring gear and drive pinion as a set (hypoid gear set).

Bearing

1. Thoroughly clean bearing.
2. Check bearings for wear, scratches, pitting or flaking. Check tapered roller bearing for smooth rotation. If damaged, replace outer race and inner cone as a set.

Differential Case Assembly

- Check mating surfaces of differential case, side gears, pinion mate gears, pinion mate shaft and thrust washers.
- Check viscous coupling for oil leakage. If necessary, replace it with new one.

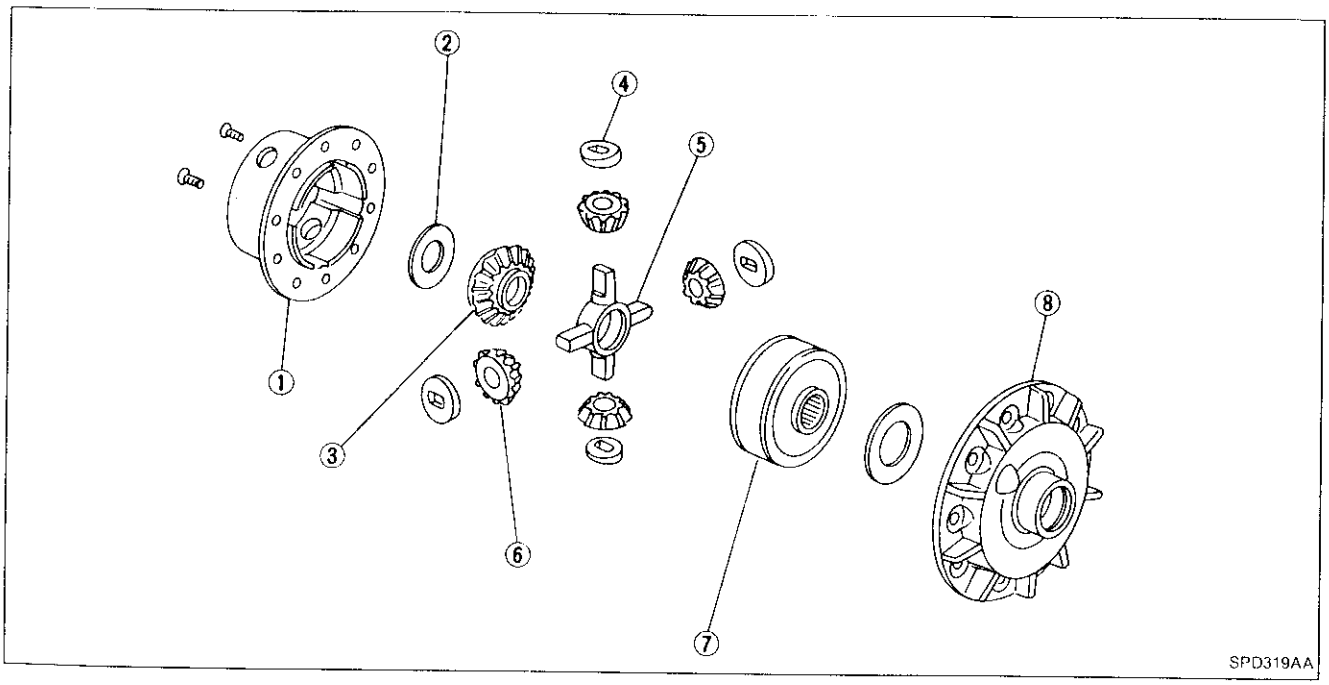

① Differential case B
② Side gear thrust washer
③ Side gear (RH)
④ Pinion mate thrust washer
⑤ Pinion mate shaft
⑥ Pinion mate gear
⑦ Side gear (LH) with viscous coupling
⑧ Differential case A

To avoid confusion while calculating bearing shims, it is absolutely necessary to stay with the metric system. If you measure anything in inches, **the results must be converted to the metric system.**

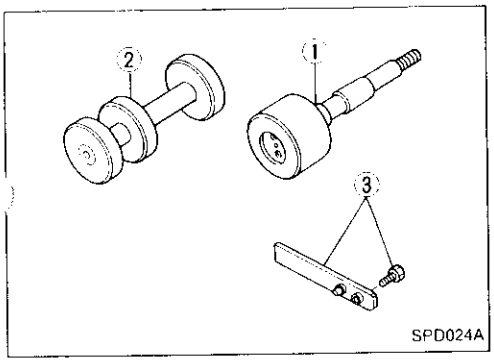

Drive Pinion Height

1. First prepare Tools for pinion height adjustment.
   ① Dummy shaft (KV38103910)
   ② Height gauge (KV38100120)
   ③ Stopper (KV38100140)
2. To simplify the job, make a chart, like the one below, to organize your calculations.

LETTERS	HUNDREDTHS OF A MILLIMETER
H: Head number	
N: Measuring clearance	

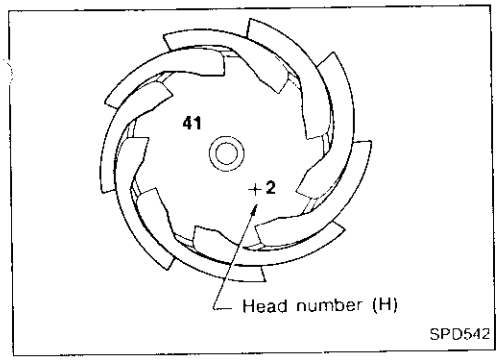

3. Write the following numbers down the chart.
   H: Head number

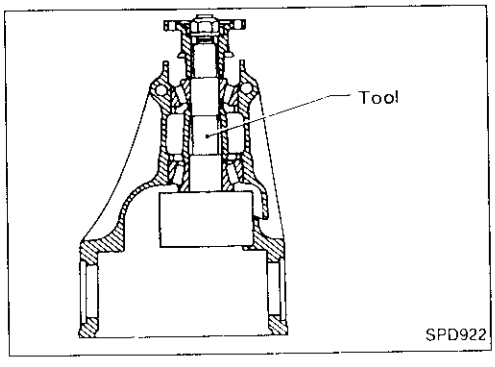

4. Set Tool (Dummy shaft) as shown below and tighten drive pinion nut carefully to correct preload of 1.0 to 1.3 N·m (10 to 13 kg-cm, 8.7 to 11.3 in-lb).
   Tool number: KV38103910

Drive Pinion Height (Cont'd)

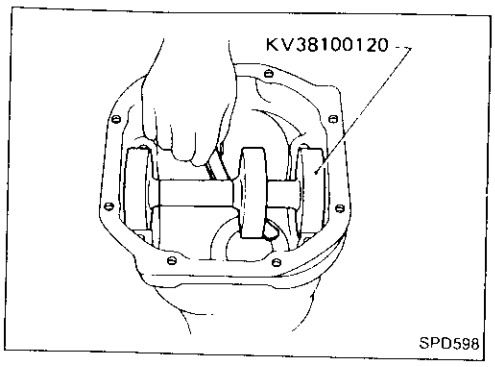

5. Attach Tool (Height gauge) to gear carrier, and measure the clearance between the height gauge and the dummy shaft face.
6. Substitute these values into the equation to calculate the thickness of the washer.

If value signifying H is not given, regard it as zero and calculate.

T (Thickness of washer) = N – (H x 0.01) + 3.00

Example:

N = 0.23

H = 1

T = N – (H x 0.01) + 3.00
= 0.23 – (1 x 0.01) + 3.00

(1) H 1

+1

(2) +1

x 0.01

+ 0.01

(3) N 0.23

– (+0.01)

0.22

(4) 0.22

+3.00

3.22

∴T = 3.22

7. Select the proper pinion height washer.

Drive pinion height adjusting washer:
Refer to SDS (PD-36).

If you cannot find the desired thickness of washer, use washer with thickness closest to the calculated value.

Example:

Calculated value ... T = 3.22 mm
Used washer ... T = 3.21 mm

Drive Pinion Height (Cont'd)

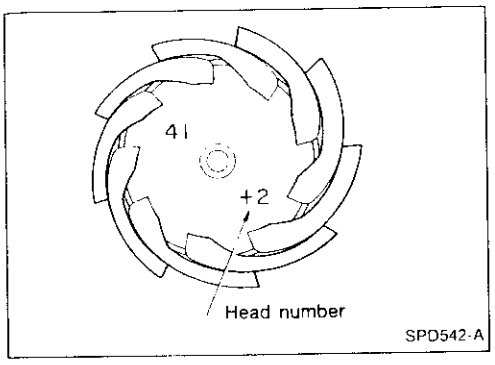

— Washer selection when replacing hypoid gear set —

Drive pinions may be different in height due to the manufacturing process. Use a washer of proper thickness to adjust the height of new drive pinion. Select the washer as follows:

$T = (t_1 - t_2) \times 0.01 + T_0$

where T: thickness of the washer to select
T_0: thickness of the washer used
t_1: old drive pinion head number
t_2: new drive pinion head number

Example:

$T_0 = 3.21$, $t_1 = +2$, $t_2 = -1$

$T = \{2 - (-1)\} \times 0.01 + 3.21$
$= 3 \times 0.01 + 3.21$
$= 0.03 + 3.21$
$= 3.24$

T = 3.24 mm

Drive pinion height adjusting washer:
Refer to SDS (PD-36).

Side Bearing Preload

1. To simplify the job, make a chart like the one below to organize your calculations.

LETTERS	VALUE
A: Left housing	
B: Right housing	
C: Differential case	
D: Differential case	
H: (+) or (–): ring gear	
E: Left side bearing (= 21 – Measured height)	
F: Right side bearing (= 21 – Measured height)	
G: Side bearing spacer (= 8.1 – Measured thickness)	
X:	1.97
Y:	2.07

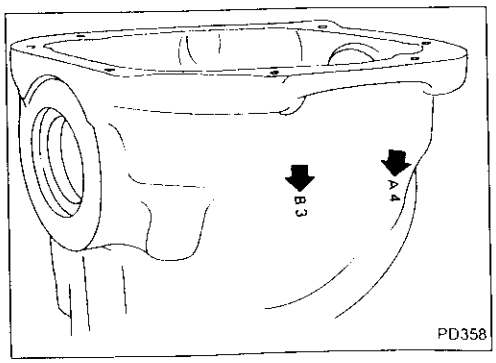

2. Write the following numbers down in the chart.
   If numbers for A, B, C, D and H are not given, regard them as zero.
   A & B: Figures marked on gear carrier

Side Bearing Preload (Cont'd)

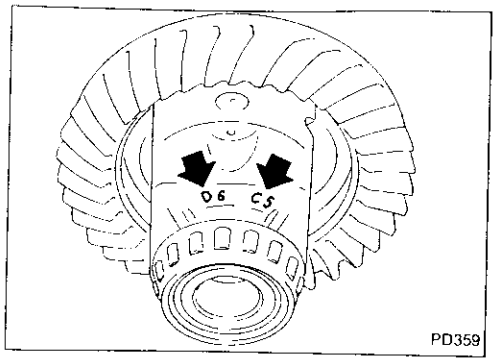

C & D: Figures marked on differential case

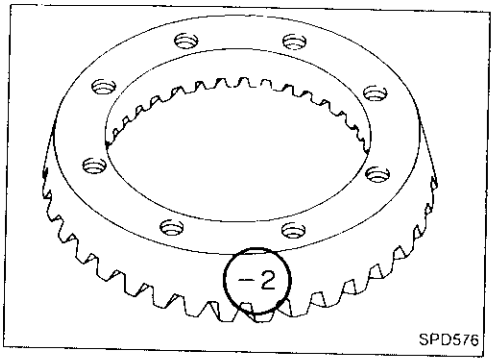

H: Figure marked on ring gear
Do not confuse negative and positive values.

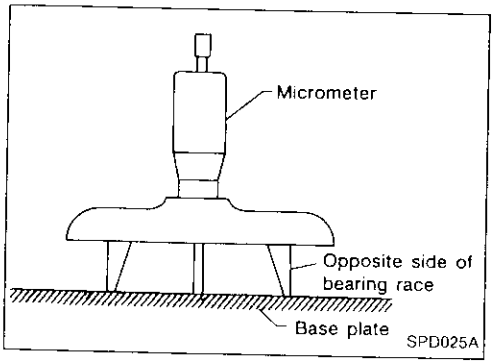

3. Calculate "E" and "F" as follows:
   E & F = 21 mm (0.83 in) – Measured bearing height
   Bearing height can be measured as follows:
   a. Measure height of bearing race which will be used as a base for the opposite side of a side bearing assembly.

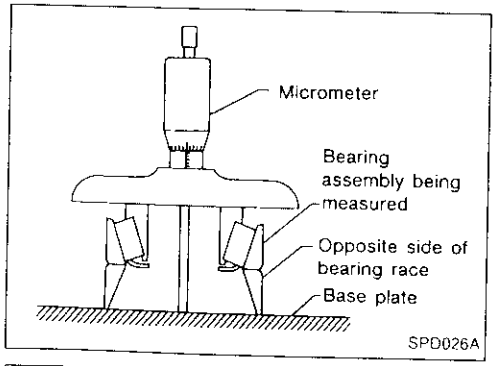

   b. Set bearing assembly to be measured on the base race and measure the total height.
   Lubricate bearing assembly and turn it several times to settle it on the base for accurate measurement.
   c. Subtract base race height from total height.

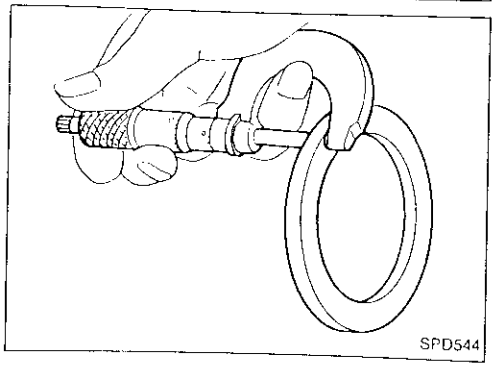

4. Calculate "G".
   G: This is the difference in thickness of side spacer from standard width [8.10 mm (0.3189 in)].
   G = 8.10 mm (0.3189 in) – Measured thickness

Side Bearing Preload (Cont'd)

LETTERS	VALUE
A: Left housing	
B: Right housing	
C: Differential case	
D: Differential case	
H: (+) or (−): ring gear	
E: Left side bearing (= 21 − Measured height)	
F: Right side bearing (= 21 − Measured height)	
G: Side bearing spacer (= 8.1 − measured thickness)	
X:	1.97
Y:	2.07

Calculations:

Side bearing spacer is used on the right

Left side washer thickness

$$T_1 = (A - C + D - H) \times 0.01 + E + Y$$

Right side washer thickness

$$T_2 = (B - D + H) \times 0.01 + F + G + X$$

Side bearing spacer is used on the left

Left side washer thickness

$$T_1 = (A - C + D - H) \times 0.01 + E + G + X$$

Right side washer thickness

$$T_2 = (B - D + H) \times 0.01 + F + Y$$

PD

Side Bearing Preload (Cont'd)

Example for R200V which has a side bearing spacer on the right:

A = 4	E = 0.18
B = 3	F = 0.15
C = 5	G = 0.08
D = 6	X = 1.97
H = –2	Y = 2.07

Left side washer thickness (without spacer)

$T_1 = (A - C + D - H) \times 0.01 + E + Y$

4	A	
– 5	– C	
= –1		
+ 6	+ D	
= 5		
– (–2)	– H	
= 7		
x 0.01	x 0.01	
= 0.07		
+ 0.18	+ E	
= 0.25		
+ 2.07	+ Y	
= 2.32		
T_1 = 2.32 mm		

Right side washer thickness (with spacer)

$T_2 = (B - D + H) \times 0.01 + F + G + X$

3	B	
– 6	– D	
= –3		
+ (–2)	+ H	
= –5		
x 0.01	x 0.01	
= –0.05		
+ 0.15	+ F	
= 0.10		
+ 0.08	+ G	
= 0.18		
+ 1.97	+ X	
= 2.15		
T_2 = 2.15 mm		

5. Select the proper shims. Refer to SDS (PD-36).
If you cannot find the desired thickness of shims, use shims with the total thickness closest to the calculated value.

Tooth Contact

Checking gear tooth contact pattern is necessary to verify correct relationship between ring gear and drive pinion.
Hypoid gears which are not positioned in proper arrangement may be noisy and/or have a short life. Check gear tooth contact pattern to obtain the best contact for low noise and long life.

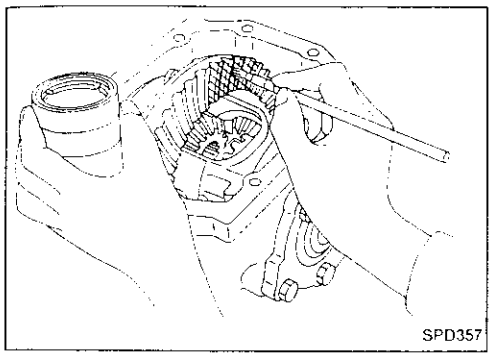
SPD357

1. Thoroughly clean ring gear and drive pinion teeth.
2. Lightly apply a mixture of powdered titanium oxide and oil or the equivalent. Apply it to 3 or 4 teeth of ring gear drive side.

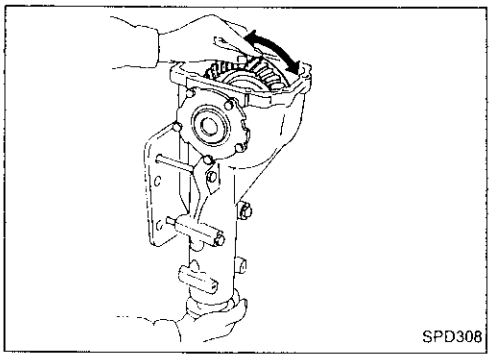
SPD308

3. Hold companion flange steady by hand and rotate the ring gear in both directions.

Usually the pattern will be correct if shims are correctly calculated and the backlash is correct.
However, in rare cases, trial and error processes may be employed to obtain a correct pattern.
The tooth pattern is the best indication of how well a differential has been set up.

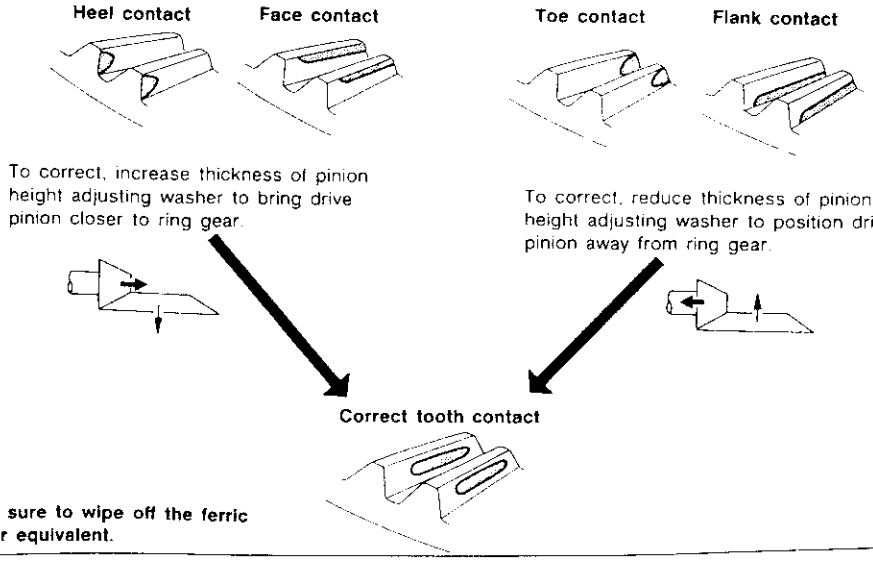

After adjustment, be sure to wipe off the ferric oxide and oil or their equivalent.

SPD007-A

Differential Case

Whenever side gears or pinion mate gears are replaced, selection of thrust washers should be carried out.
Before selecting thrust washers, make sure all parts are clean and well lubricated with hypoid gear oil.

THRUST WASHER SELECTION

1. Install the previously removed thrust washer on right side gear. On left side gear, install a suitable thrust washer. Temporarily tighten differential cases using two screws.

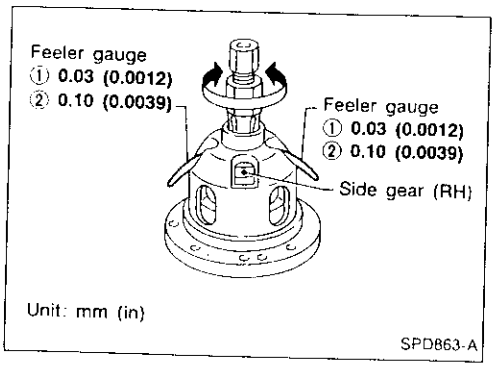

2. Position differential assembly so that right side gear is on the upper side. Place two feeler gauges of 0.03 mm (0.0012 in) thickness between right side gear and thrust washer as shown.

Do not insert feeler gauge in oil groove portion of differential case.

3. Rotate right side gear with a suitable tool attached to splines.
   If hard to rotate, replace thrust washer on left side gear with a thinner one.
4. Replace both 0.03 mm (0.0012 in) feeler gauges with 0.10 mm (0.0039 in) gauges. At this point, make sure right side gear does not rotate. If it rotates, replace thrust washer on left side gear with a thicker one to prevent rotation.

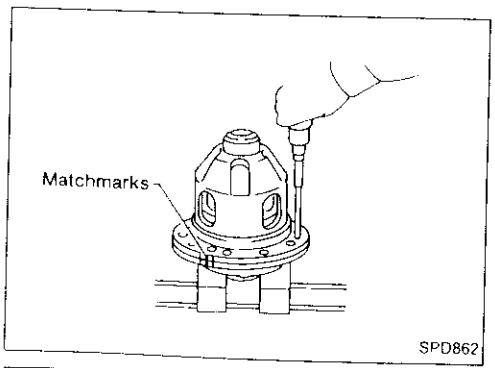

ASSEMBLY

1. Install differential case A and B.

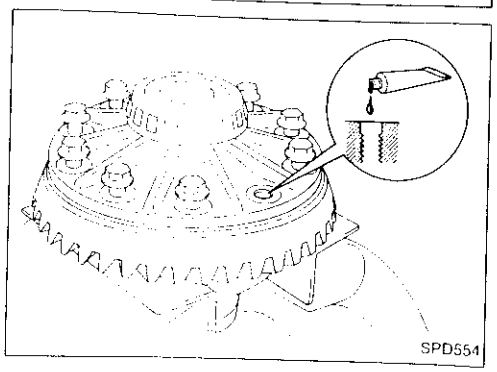

2. Place differential case on ring gear.
3. Apply locking sealant to ring gear bolts, and install them.

Tighten bolts in a criss-cross fashion, lightly tapping bolt head with a hammer.

Differential Case (Cont'd)

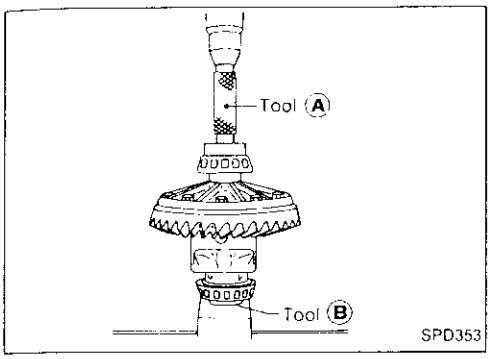

4. Press-fit side bearing inner cones on differential case with Tool.
   Tool number:
   - (A) **KV38100300**
   - (B) **ST33061000**

Differential Carrier

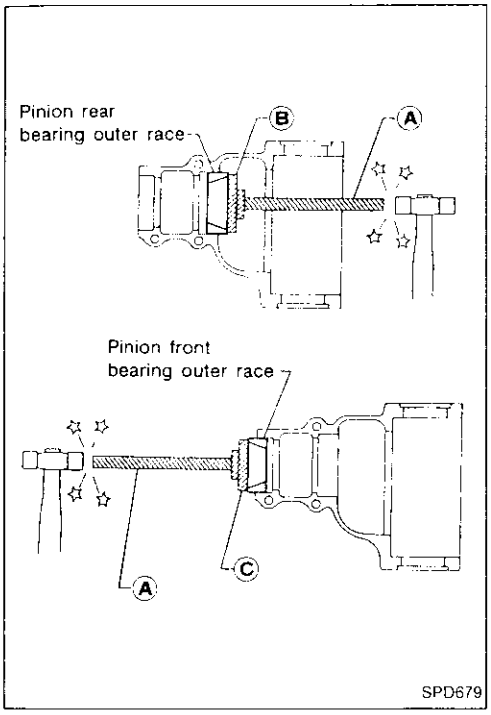

1. Press-fit front and rear bearing outer races with Tools.
   Tool number:
   - (A) **ST30611000**
   - (B) **ST30621000**
   - (C) **ST30613000**
2. Select pinion bearing adjusting washer and drive pinion bearing spacer. Refer to ADJUSTMENT (PD-17).

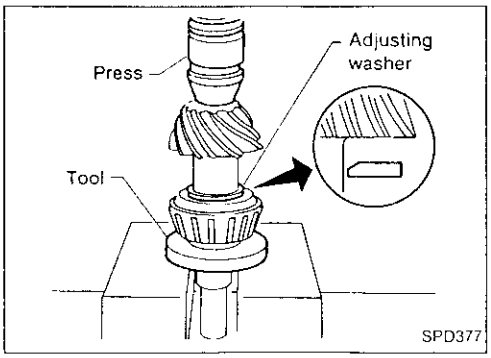

3. Install selected drive pinion height adjusting washer in drive pinion. Using press and Tool, press-fit pinion rear bearing inner cone into it.
   Tool number: ST30901000

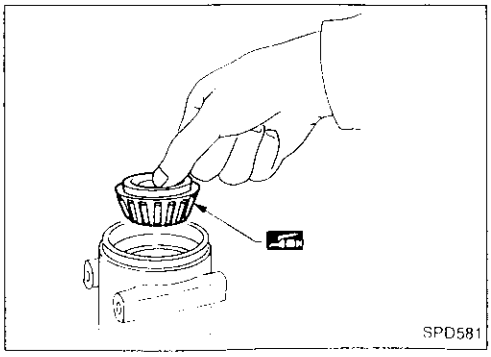

4. Place pinion front bearing inner cone in final drive housing.

Differential Carrier (Cont'd)

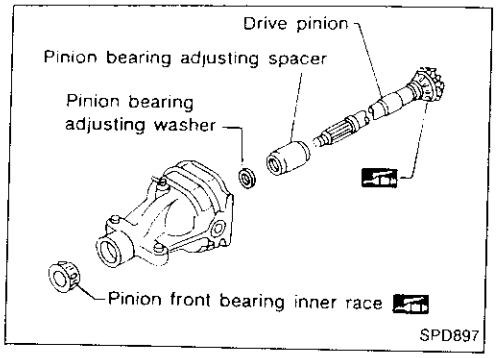

5. Set drive pinion assembly (as shown in figure at left) in differential carrier and install drive pinion, with press and suitable tool.

Stop when drive pinion touches bearing.

Apply multi-purpose grease to pinion rear bearing inner race, pinion front bearing inner race.

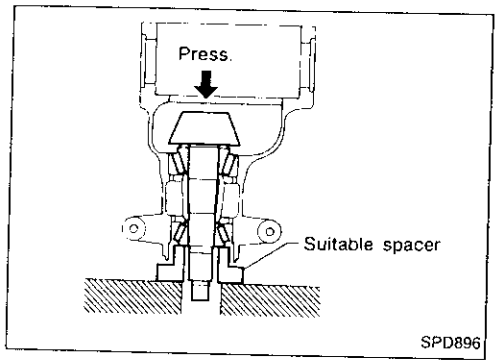

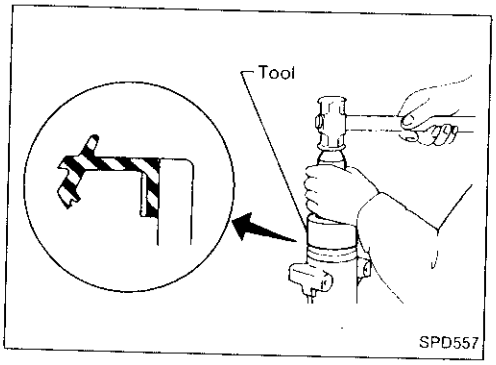

6. Apply multi-purpose grease to cavity at sealing lips of oil seal. Install front oil seal with Tool.

Tool number: KV38100500

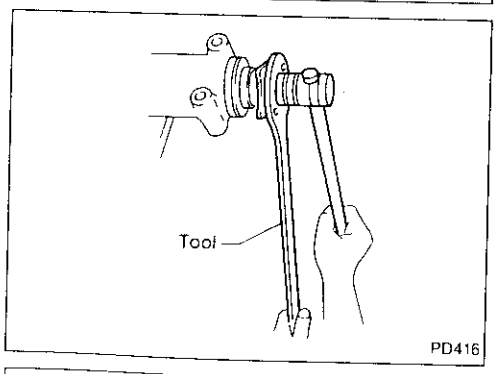

7. Install companion flange, and tighten pinion nut to specified torque with suitable tool.

Make sure that threaded portion of drive pinion and pinion nut are free from oil or grease.

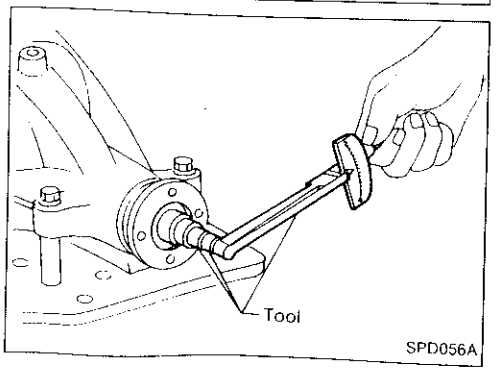

8. Turn drive pinion in both directions several times, and measure pinion bearing preload.

Pinion bearing preload:

1.1 - 1.4 N·m (11 - 14 kg-cm, 9.5 - 12.2 in-lb)

When pinion bearing preload is outside specifications, replacement is required for pinion bearing adjusting washer and spacer. Replace with those of different thickness.

Differential Carrier (Cont'd)

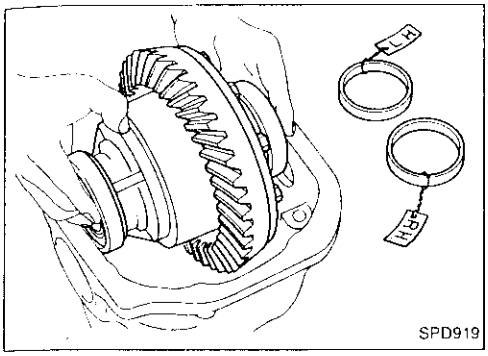

9. Select side bearing adjusting washer. Refer to ADJUSTMENT (PD-19).
10. Install differential case assembly with side bearing outer races into gear carrier.

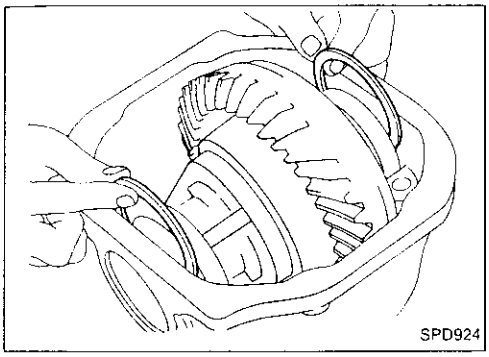

11. Insert left and right side bearing adjusting washers in place between side bearings and carrier.

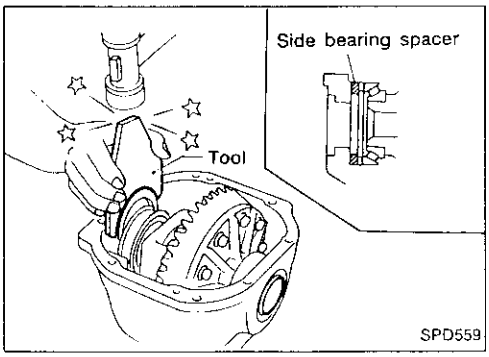

12. Drive in side bearing spacer with Tool.
    Tool number: KV38100600
    Spacer location: Right side

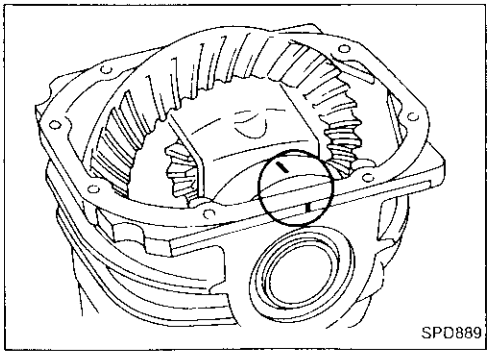

13. Align mark on bearing cap with that on gear carrier and install bearing cap on gear carrier.

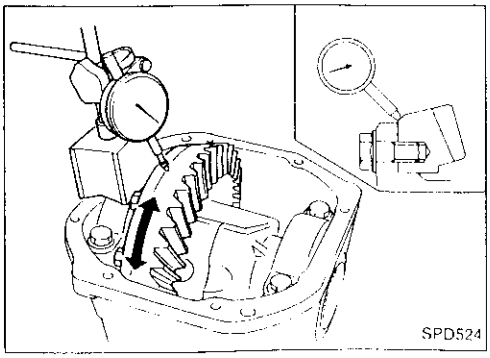

14. Check runout of ring gear with a dial indicator.
    Runout limit: 0.05 mm (0.0020 in)

Differential Carrier (Cont'd)

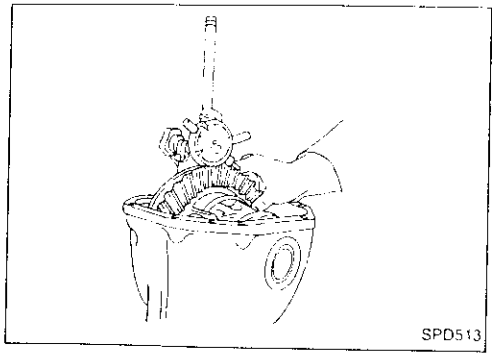

15. Measure ring gear to drive pinion backlash with a dial indicator.

Ring gear to drive pinion backlash:
0.10 - 0.15 mm (0.0039 - 0.0059 in)

- If backlash is too small, adjustment of shim thickness is required. Decrease thickness of left shim and increase thickness of right shim by the same amount.
  If backlash is too great, reverse the above procedure.

Never change the total amount of shims as it will change the bearing preload.

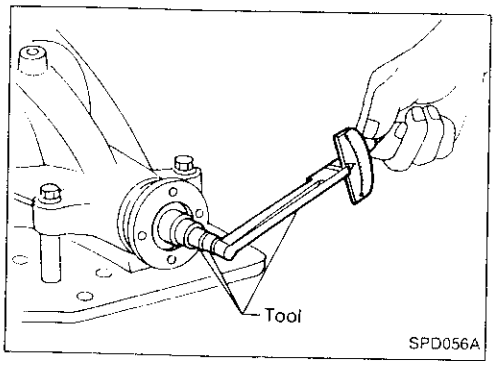

16. Check total preload with Tool.

When checking preload, turn drive pinion in both directions several times to seat bearing rollers correctly.

Total preload:
1.4 - 3.1 N·m (14 - 32 kg-cm, 12 - 28 in-lb)

- If preload is too great, remove the same amount of shim from each side.
- If preload is too small, add the same amount of shim to each side.

Never add or remove a different number of shims for each side. Difference in number of shims will change ring gear to drive pinion backlash.

17. Recheck ring gear to drive pinion backlash. Increase or decrease in thickness of shims will cause change to ring gear to pinion backlash.
- Check whether the backlash varies excessively in different places. Foreign matter may be caught between the ring gear and the differential case causing the trouble.
- The backlash can vary greatly even when the ring gear runout is within a specified range. In that case, replace the hypoid gear set or differential case.

18. Check tooth contact.
    Refer to ADJUSTMENT (PD-23).

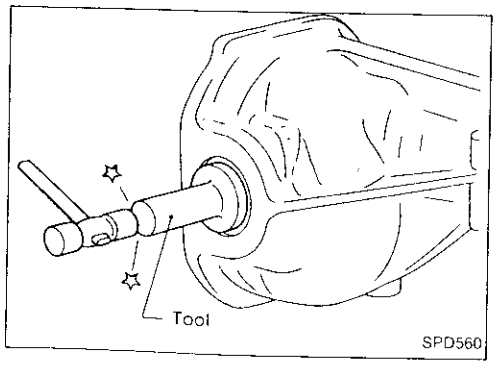

19. Apply multi-purpose grease to cavity at sealing lips of oil seal. Install side oil seal.
    Tool number: KV38100200
20. Install rear cover and gasket.

Description

- The differential oil pumps automatically repeat ON-OFF operation according to the differential gear oil temperature.
  OFF → ON 130°C (266°F)
  ON → OFF 120°C (248°F)
  However, the pumps will not operate when the vehicle speed is less than 120 km/h (75 MPH).
- When the oil temperature becomes excessively high, the warning lamp in the combination meter will illuminate.
  Differential gear oil:
  OFF → ON 180°C (356°F)
  ON → OFF 150°C (302°F)

Removal and Installation

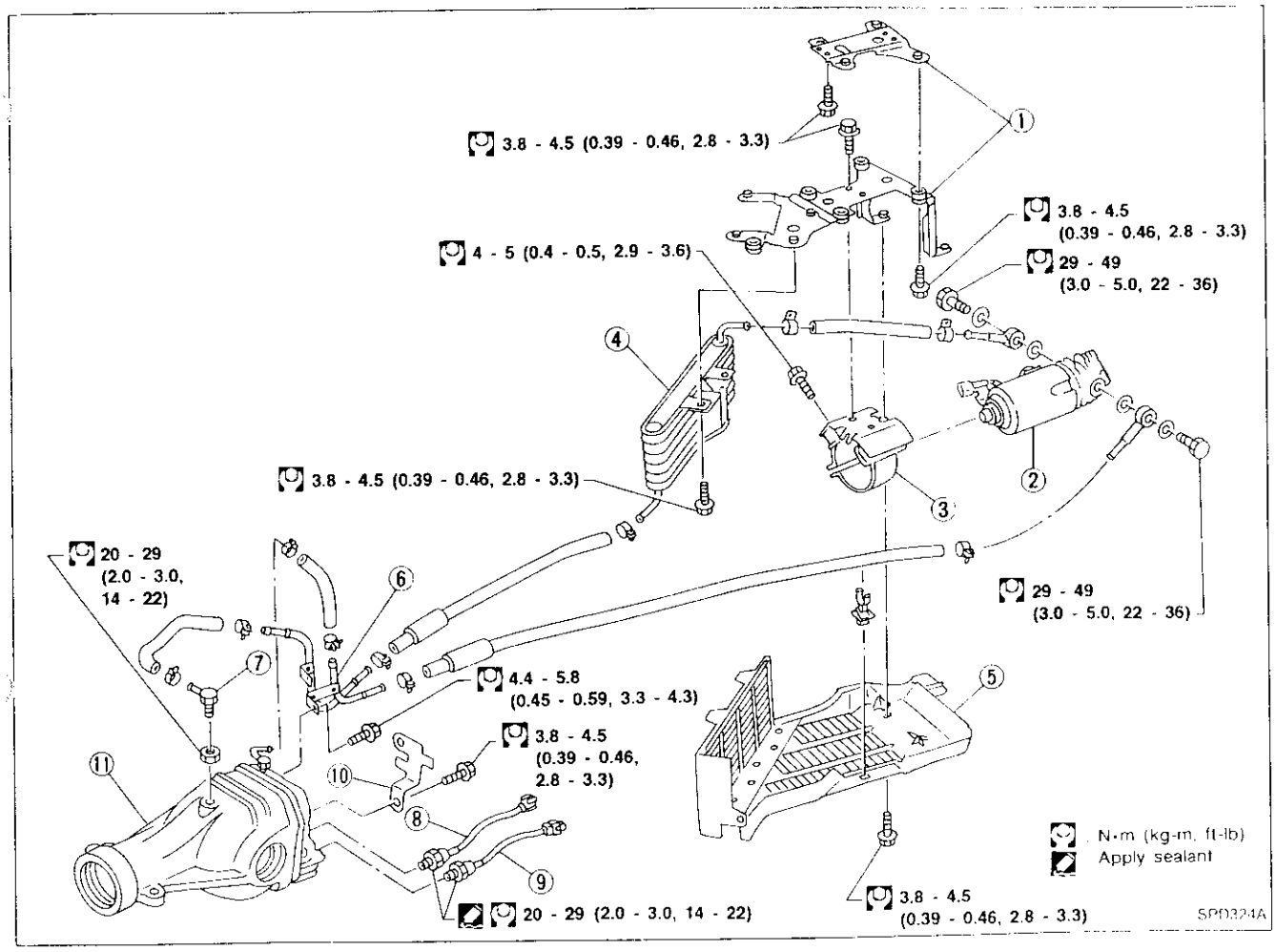

① Oil pump mounting bracket
② Oil pump assembly
③ Oil pump bracket
④ Oil cooler assembly
⑤ Oil cooler protector
⑥ Oil cooler tube assembly
⑦ Inlet connector
⑧ Warning lamp switch
⑨ Oil temperature switch
⑩ Connector bracket
⑪ Final drive

Wiring Diagram

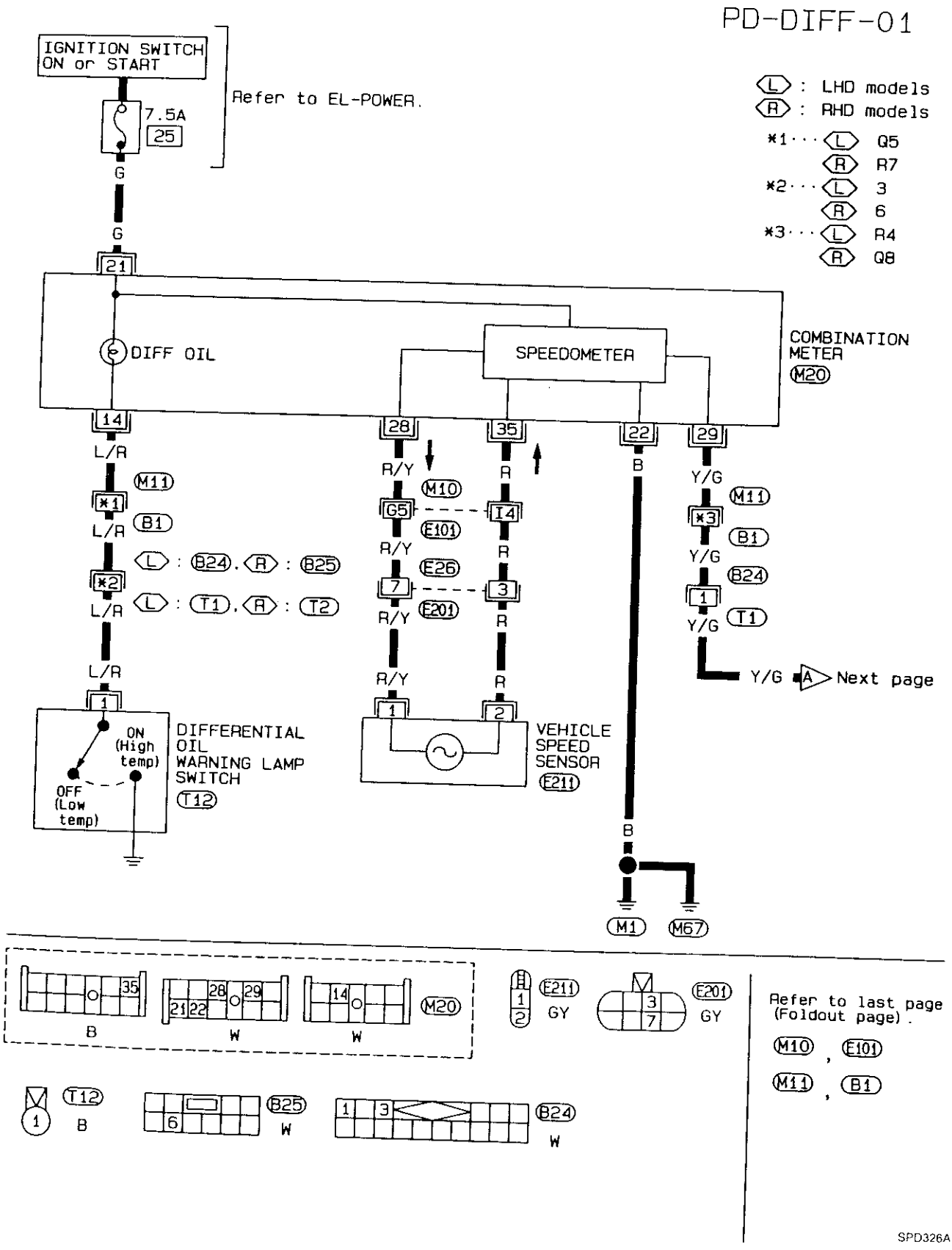

DIFFERENTIAL OIL COOLER SYSTEM

Wiring Diagram (Cont'd)

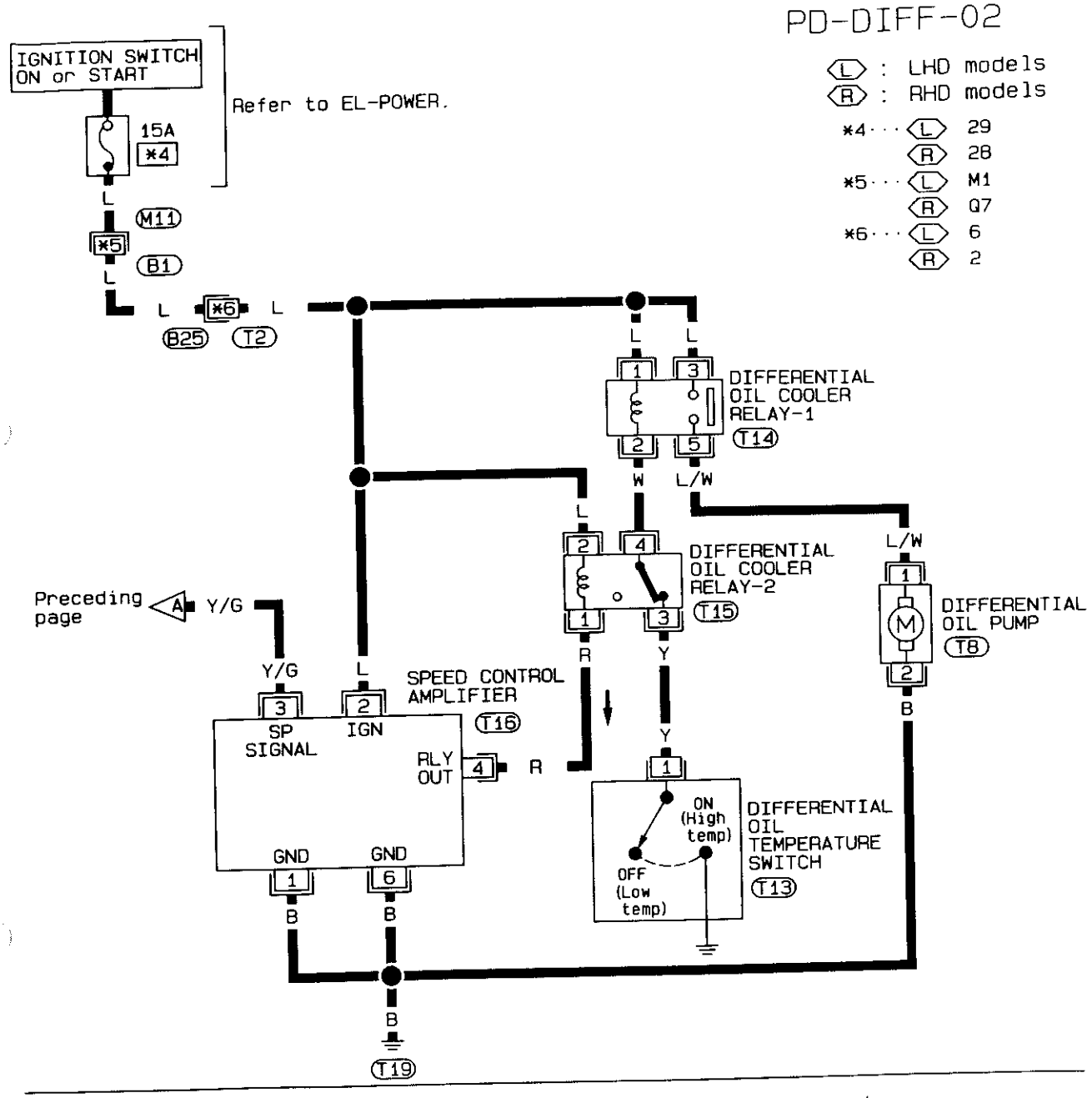

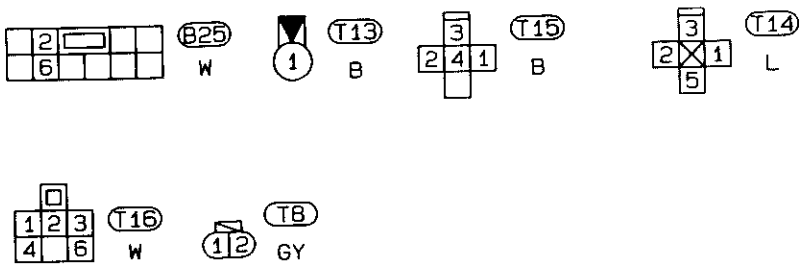

Refer to last page (Foldout page).

M11 , B1

SPD327A

Inspection

Thoroughly clean all parts in cleaning solvent and blow dry with compressed air, if available.

OIL PUMP ASSEMBLY

Replace oil pump assembly when motor does not rotate because of motor seizure or other damage.

OIL COOLER ASSEMBLY, OIL TUBE ASSEMBLY, OIL HOSE

If oil leakage is detected during removal, replace oil cooler assembly or oil tube.

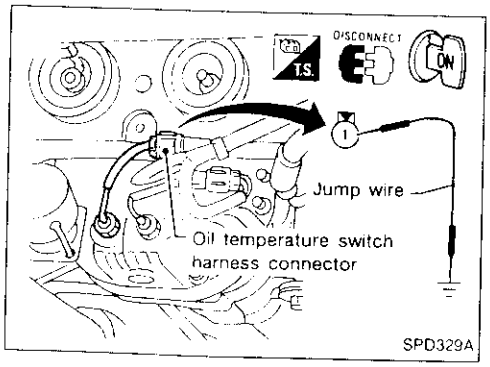

Trouble Diagnoses

SYMPTOM:

Oil pump does not rotate.

CHECK OIL PUMP OPERATION

1. Disconnect speed control amplifier harness connector.
2. Disconnect oil pump temperature switch harness connector.
3. Turn ignition switch "ON".
4. Connect jump wire between oil temperature switch harness connector terminal ① and ground.

Oil pump rotates:

Refer to Procedure A.

Oil pump does not rotate:

Refer to Procedure B.

Trouble Diagnoses (Cont'd)

Procedure A

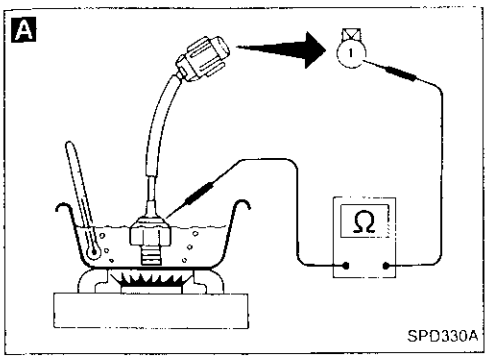

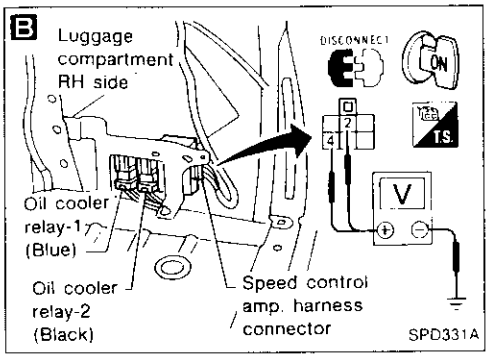

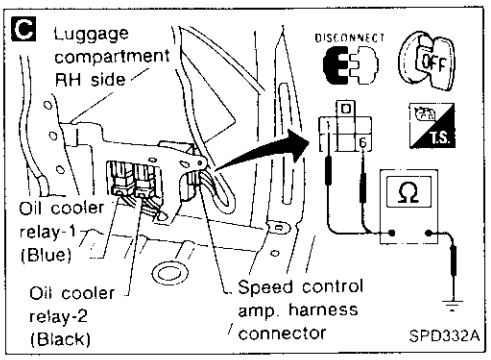

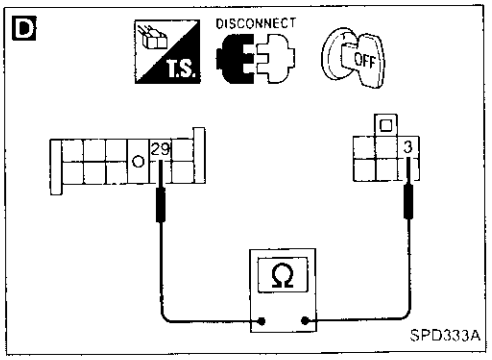

A

CHECK OIL TEMPERATURE SWITCH.
1) Remove oil temperature switch.
2) Check proper operation
Operating temperature:
OFF → ON 130°C (266°F)

NG → Replace oil temperature switch.

OK ↓

B

CHECK SPEED CONTROL AMPLIFIER POWER SUPPLY
1) Disconnect speed control amplifier harness connector
2) Turn ignition switch "ON".
3) Check voltage between ②, ④ and ground.
Battery voltage should exist.

NG → Check and repair the following parts:
- Harness continuity between speed control amplifier harness connector terminal ② and fuse
- Harness continuity between speed control amplifier harness connector terminal ④ and oil cooler relay-2 harness connector terminal ①
- Harness continuity between oil cooler relay-2 harness connector terminal ② and fuse
- Oil cooler relay-2

OK ↓

C

CHECK SPEED CONTROL AMPLIFIER GROUND CIRCUIT.
1) Turn ignition switch "OFF".
2) Disconnect speed control amplifier harness connector.
3) Check harness continuity between ①, ⑥ and ground.
Continuity should exist.

NG → Repair or replace harness.

OK ↓

D

CHECK SPEED SIGNAL INPUT CIRCUIT.
1) Disconnect speed control amplifier harness connector and combination meter harness connector.
2) Check harness continuity between speed control amplifier harness connector terminal ③ and combination meter harness connector terminal ㉙.
Continuity should exist.

NG → Repair or replace harness.

OK ↓

CHECK VEHICLE SPEED SENSOR.
Refer to "METER AND GAUGES" in EL section.

NG → Replace vehicle speed sensor

OK ↓

Replace speed control amplifier.

PD

Trouble Diagnoses (Cont'd)

Procedure B

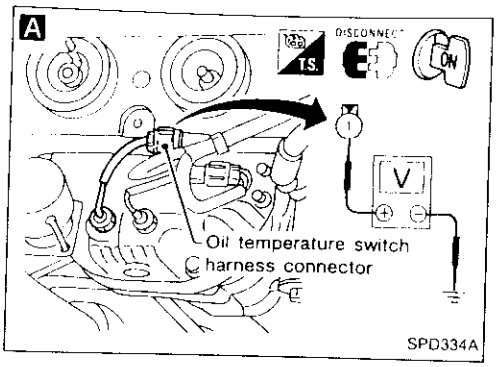

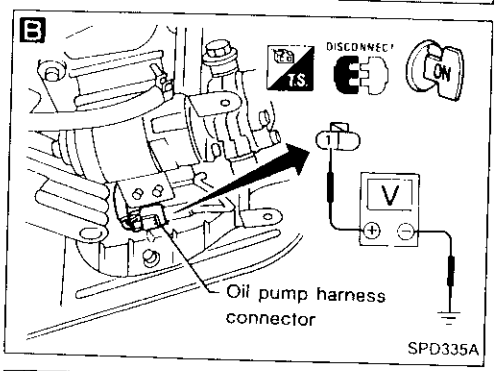

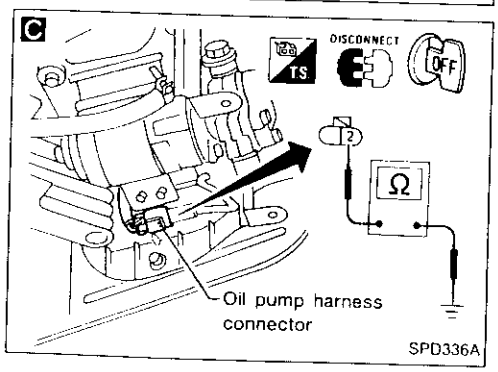

A

CHECK POWER SUPPLY.
1) Disconnect oil temperature switch harness connector and speed control amplifier harness connector.
2) Turn ignition switch "ON".
3) Check voltage between oil temperature switch harness connector terminal ① and ground.

Battery voltage should exist.

NG →

Check and repair the following parts:
- Harness continuity between oil cooler relay-1 harness connector terminal ① and fuse
- Fuse
- Harness continuity between oil cooler relay-1 harness connector terminal ② and oil cooler relay-2 harness connector terminal ④
- Oil cooler relay-1
- Oil cooler relay-2
- Harness continuity between oil cooler relay-2 harness connector terminal ③ and oil temperature switch harness connector terminal ①

OK ↓

B

1) Disconnect oil pump harness connector.
2) Turn ignition switch "ON".
3) Check voltage between oil pump harness connector terminal ① and ground.

Battery voltage should exist.

If NG, check and repair the following parts:
- Harness continuity between oil cooler relay-1 harness connector terminal ③ and fuse
- Fuse
- Harness continuity between oil cooler relay-1 harness connector terminal ⑤ and oil pump harness connector terminal ①
- Oil cooler relay-1

OK ↓

C

CHECK GROUND CIRCUIT.
1) Turn ignition switch "OFF".
2) Disconnect oil pump harness connector.
3) Check harness continuity between oil pump harness connector terminal ② and ground.

Continuity should exist.

If NG, repair or replace harness.

OK ↓

Replace oil pump.

Propeller Shaft

GENERAL SPECIFICATIONS

Unit: mm (in)

Applied model	M/T	A/T
Propeller shaft model	3S71A	
Number of joints	3	
Coupling method with transmission	Sleeve type	
Type of journal bearings	Shell type (Non-disassembly type)	
Distance between yokes	63.0 (2.480)	
Shaft length (Spider to spider)		
1st	421.0 (16.57)	441.0 (17.36)
2nd		
Without ABS	650.0 (25.59)	
With ABS	636.0 (25.04)	
Shaft outer diameter		
1st	75.0 (2.953)	
2nd	75.0 (2.953)	50.8 (2.000)

SPECIFICATIONS AND ADJUSTMENT

Unit: mm (in)

Propeller shaft model	3S71A
Propeller shaft runout limit	0.6 (0.024)
Journal axial play	0 (0)

Final Drive

GENERAL SPECIFICATIONS

Applied model	M/T	A/T
Final drive model	R200V	
Ring gear pitch diameter mm (in)	205 (8.07)	
Gear ratio	3.692	3.916
Number of teeth (Ring gear/drive pinion)	48/13	47/12
Oil capacity ℓ (Imp pt)	1.2 - 1.4 (2-1/8 - 2-1/2)	
Number of pinion gears	4	
Side gear bearing spacer location	Right	

INSPECTION AND ADJUSTMENT

Ring gear runout

Ring gear runout limit mm (in)	0.05 (0.0020)

Side gear adjustment

Clearance between side gear and differential case mm (in)	0.03 - 0.09 (0.0012 - 0.0035)

Available side gear thrust washers

Thickness mm (in)	Part number
0.80 (0.0315)	38424-40F60
0.83 (0.0327)	38424-40F61
0.86 (0.0339)	38424-40F62
0.89 (0.0350)	38424-40F63
0.92 (0.0362)	38424-40F64
0.95 (0.0374)	38424-40F65
0.98 (0.0386)	38424-40F66
1.01 (0.0398)	38424-40F67
1.04 (0.0409)	38424-40F68
1.07 (0.0421)	38424-40F69
1.10 (0.0433)	38424-40F70
1.13 (0.0445)	38424-40F71
1.16 (0.0457)	38424-40F72
1.19 (0.0469)	38424-40F73
1.22 (0.0480)	38424-40F74
1.25 (0.0492)	38424-40F75
1.28 (0.0504)	38424-40F76
1.31 (0.0516)	38424-40F77
1.34 (0.0528)	38424-40F78
1.37 (0.0539)	38424-40F79
1.40 (0.0551)	38424-40F80
1.43 (0.0563)	38424-40F81
1.46 (0.0575)	38424-40F82
1.49 (0.0587)	38424-40F83

Final Drive (Cont'd)

Drive pinion height adjustment

Available pinion height adjusting washers

Thickness mm (in)	Part number
3.09 (0.1217)	38154-P6017
3.12 (0.1228)	38154-P6018
3.15 (0.1240)	38154-P6019
3.18 (0.1252)	38154-P6020
3.21 (0.1264)	38154-P6021
3.24 (0.1276)	38154-P6022
3.27 (0.1287)	38154-P6023
3.30 (0.1299)	38154-P6024
3.33 (0.1311)	38154-P6025
3.36 (0.1323)	38154-P6026
3.39 (0.1335)	38154-P6027
3.42 (0.1346)	38154-P6028
3.45 (0.1358)	38154-P6029
3.48 (0.1370)	38154-P6030
3.51 (0.1382)	38154-P6031
3.54 (0.1394)	38154-P6032
3.57 (0.1406)	38154-P6033
3.60 (0.1417)	38154-P6034
3.63 (0.1429)	38154-P6035
3.66 (0.1441)	38154-P6036

Drive pinion preload adjustment

Drive pinion bearing adjusting method	Pinion bearing adjusting washer and spacer
Drive pinion preload with front oil seal N·m (kg-cm, in-lb)	1.1 - 1.4 (11 - 14, 9.5 - 12.2)

Available drive pinion bearing preload adjusting washers

Thickness mm (in)	Part number
3.80 - 3.82 (0.1496 - 0.1504)	38125-61001
3.82 - 3.84 (0.1504 - 0.1512)	38126-61001
3.84 - 3.86 (0.1512 - 0.1520)	38127-61001
3.86 - 3.88 (0.1520 - 0.1528)	38128-61001
3.88 - 3.90 (0.1528 - 0.1535)	38129-61001
3.90 - 3.92 (0.1535 - 0.1543)	38130-61001
3.92 - 3.94 (0.1543 - 0.1551)	38131-61001
3.94 - 3.96 (0.1551 - 0.1559)	38132-61001
3.96 - 3.98 (0.1559 - 0.1567)	38133-61001
3.98 - 4.00 (0.1567 - 0.1575)	38134-61001
4.00 - 4.02 (0.1575 - 0.1583)	38135-61001
4.02 - 4.04 (0.1583 - 0.1591)	38136-61001
4.04 - 4.06 (0.1591 - 0.1598)	38137-61001
4.06 - 4.08 (0.1598 - 0.1606)	38138-61001
4.08 - 4.10 (0.1606 - 0.1614)	38139-61001

Available drive pinion bearing preload adjusting spacers

Length mm (in)	Part number
54.50 (2.1457)	38165-B4000
54.80 (2.1575)	38165-B4001
55.10 (2.1693)	38165-B4002
55.40 (2.1811)	38165-B4003
55.70 (2.1929)	38165-B4004
56.00 (2.2047)	38165-61001

Total preload adjustment

Drive pinion to ring gear backlash mm (in)	0.10 - 0.15 (0.0039 - 0.0059)
Total preload N·m (kg-cm, in-lb)	1.4 - 3.1 (14 - 32, 12 - 28)
Side bearing adjusting method	Adjusting washer

Available side bearing adjusting washers

Thickness mm (in)	Part number
2.00 (0.0787)	38453-N3100
2.05 (0.0807)	38453-N3101
2.10 (0.0827)	38453-N3102
2.15 (0.0846)	38453-N3103
2.20 (0.0866)	38453-N3104
2.25 (0.0886)	38453-N3105
2.30 (0.0906)	38453-N3106
2.35 (0.0925)	38453-N3107
2.40 (0.0945)	38453-N3108
2.45 (0.0965)	38453-N3109
2.50 (0.0984)	38453-N3110
2.55 (0.1004)	38453-N3111
2.60 (0.1024)	38453-N3112
2.65 (0.1043)	38453-N3113

FRONT AXLE & FRONT SUSPENSION

SECTION **FA**

CONTENTS

PRECAUTIONS AND PREPARATION 2
- Precautions 2
- Special Service Tools 2
- Commercial Service Tools 3

FRONT SUSPENSION SYSTEM 4

ON-VEHICLE SERVICE 5
- Front Axle and Front Suspension Parts 5
- Front Wheel Bearing 5
- Front Wheel Alignment 5

FRONT AXLE 8
- Wheel Hub and Knuckle 8
- ABS Sensor Rotor 10
- Baffle Plate 10

FRONT SUSPENSION 11
- Coil Spring and Strut Assembly 12
- Tension Rod and Stabilizer Bar 13
- Transverse Link and Lower Ball Joint 14

SERVICE DATA AND SPECIFICATIONS (SDS) 15
- General Specifications 15
- Inspection and Adjustment 15

Commercial Service Tools

Tool name	Description	
Equivalent to GG94310000 ① Flare nut crows foot ② Torque wrench	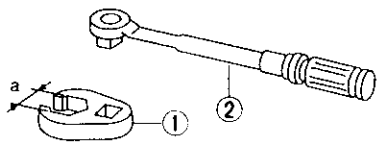 NT360	Removing and installing each brake piping **a: 10 mm (0.39 in)**
Baffle plate drift	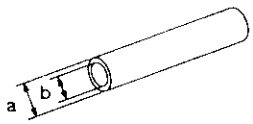 NT065	Installing baffle plate **a: 88 mm (3.46 in) dia.** **b: 68 mm (2.68 in) dia.**
Tension rod bushing drift	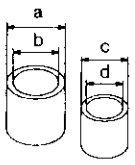 NT155	Removing and installing tension rod bushing **a: 75 mm (2.95 in) dia.** **b: 66 mm (2.60 in) dia.** **c: 62 mm (2.44 in) dia.** **d: 25 - 55 mm (0.98 - 2.17 in) dia.**
Attachment Wheel alignment	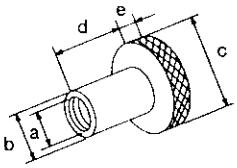 NT148	Measure wheel alignment **a: Screw M22 x 1.5** **b: 35 (1.38) dia.** **c: 65 (2.56) dia.** **d: 56 (2.20)** **e: 12 (0.47)** Unit: mm (in)

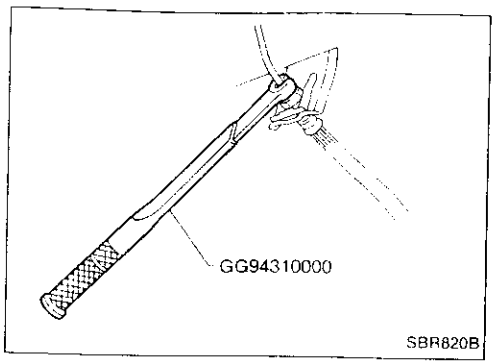

Precautions

- When installing rubber parts, final tightening must be carried out under unladen condition* with tires on ground.
  *: Fuel, radiator coolant and engine oil full. Spare tire, jack, hand tools and mats in designated positions.
- After installing removed suspension parts, check wheel alignment and adjust if necessary.
- Use flare nut wrench when removing or installing brake tubes.
- Always torque brake lines when installing.

Special Service Tools

Tool number Tool name	Description	
HT72520000 Ball joint remover	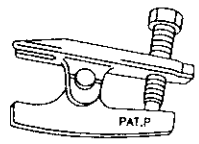 NT146	Removing tie-rod outer end and lower ball joint
HT71780000 Spring compressor	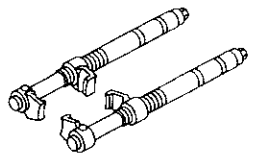 NT144	Removing and installing coil spring
ST35652000 Strut attachment	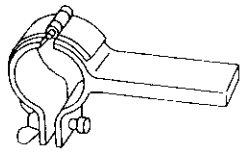 NT145	Fixing strut assembly
GG94310000 Flare nut torque wrench	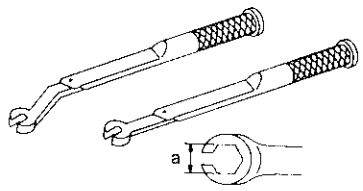 NT406	Removing and installing brake piping a: 10 mm (0.39 in)

SEC. 401

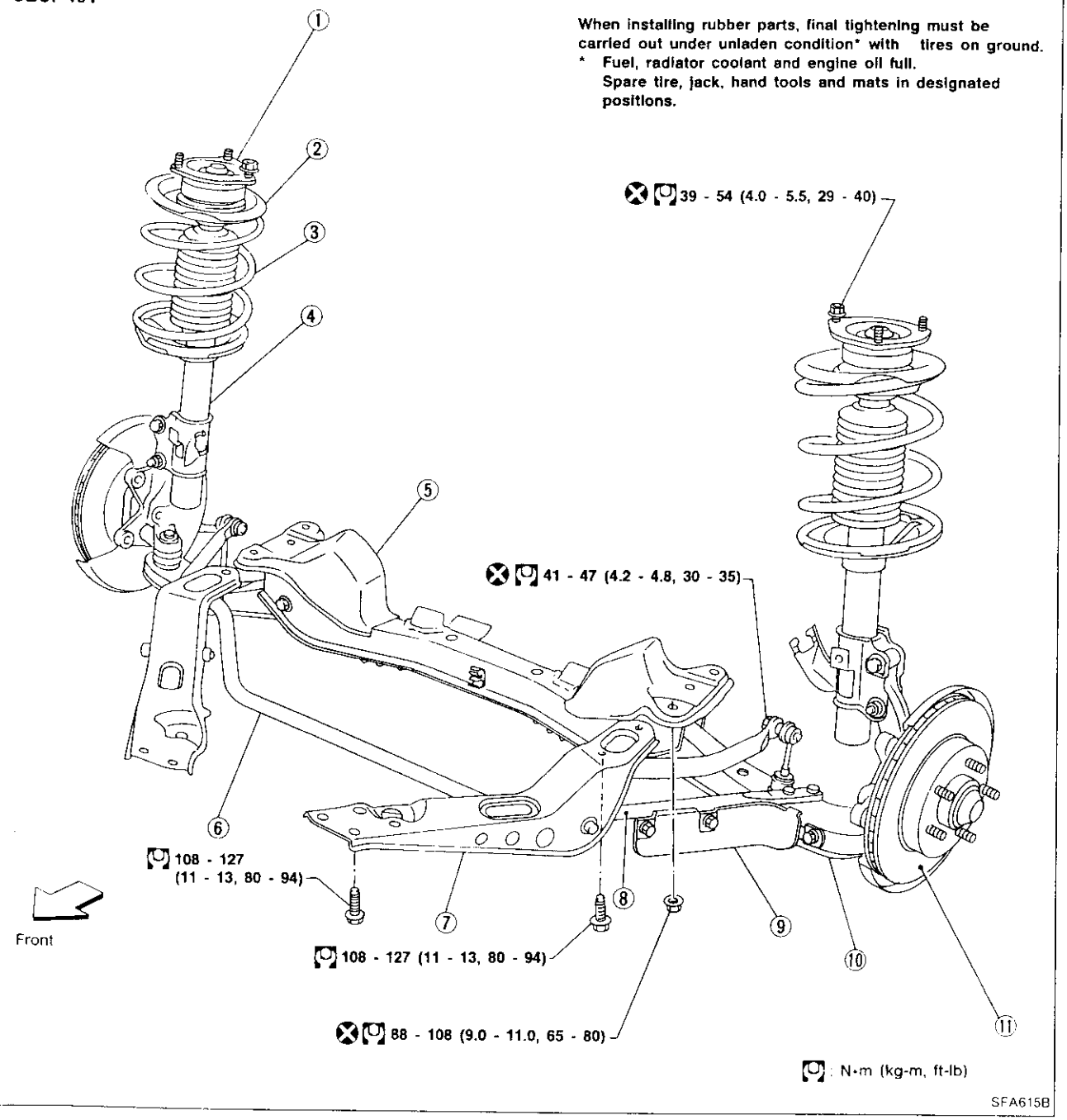

① Strut mounting insulator
② Spring upper seat
③ Coil spring
④ Strut assembly
⑤ Front suspension member
⑥ Front stabilizer
⑦ Tension rod bracket
⑧ Tension rod
⑨ Air guide
⑩ Transverse link with ball joint
⑪ Brake rotor

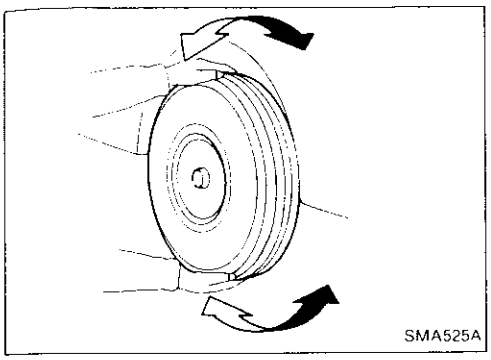
SMA525A

Front Axle and Front Suspension Parts

Check front axle and front suspension parts for looseness, cracks, wear or other damage.

- Shake each front wheel to check for excessive play.
- Retighten all axle and suspensions nuts and bolts to the specified torque.

  Tightening torque:

  Refer to FRONT SUSPENSION (FA-11).
- Make sure that cotter pins are inserted.

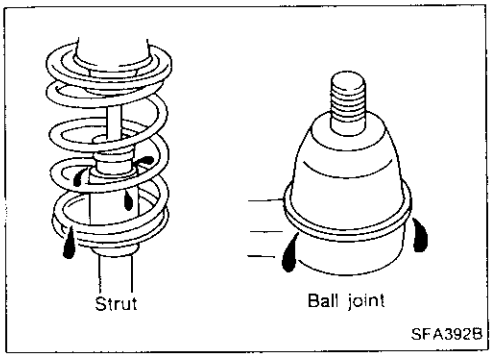

SFA392B

- Check strut (shock absorber) for oil leakage or other damage.
- Check suspension ball joint for grease leakage and ball joint dust cover for cracks or other damage.
  If ball joint dust cover is cracked or damaged, replace transverse link.

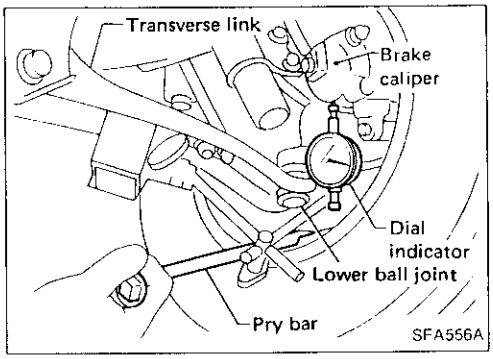

SFA556A

- Check suspension ball joint end play.

(1) Jack up front of vehicle and set the stands.
(2) Clamp dial indicator onto transverse link and place indicator tip on lower edge of brake caliper.
(3) Make sure front wheels are straight and brake pedal is depressed.
(4) Place a pry bar between transverse link and inner rim of road wheel.
(5) While raising and releasing pry bar, observe maximum dial indicator value.

  Vertical end play:

  0 mm (0 in)
(6) If ball joint movement is beyond specifications, remove and recheck it.

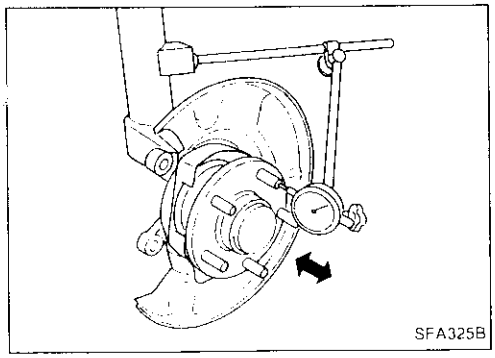
SFA325B

Front Wheel Bearing

- Check that wheel bearings operate smoothly.
- Check axial end play.

  Axial end play:

  0.05 mm (0.0020 in) or less
- If out of specification or wheel bearing does not turn smoothly, replace wheel bearing assembly.
  Refer to FRONT AXLE — Wheel Hub and Knuckle (FA-8).

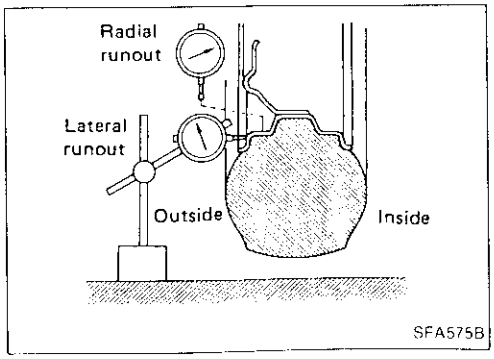

SFA575B

Front Wheel Alignment

Before checking front wheel alignment, be sure to make a preliminary inspection (Unladen*).

*: Fuel, radiator coolant and engine oil full. Spare tire, jack, hand tools and mats in designated positions.

Front Wheel Alignment (Cont'd)

PRELIMINARY INSPECTION

1. Check tires for wear and improper inflation.
2. Check wheel runout.
   Wheel runout:
   Refer to SDS (FA-15).
3. Check front wheel bearings for looseness.
4. Check front suspension for looseness.
5. Check steering linkage for looseness.
6. Check that front shock absorbers work properly.
7. Check vehicle posture (Unladen).

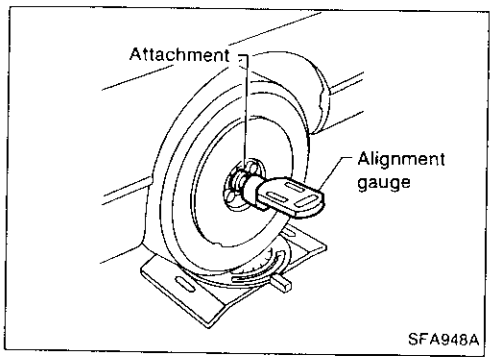

CAMBER, CASTER AND KINGPIN INCLINATION

Camber, caster and kingpin inclination are preset at factory and cannot be adjusted.

1. Measure camber, caster and kingpin inclination of both right and left wheels with a suitable alignment gauge.
   Camber, Caster and Kingpin inclination:
   Refer to SDS (FA-15).
2. If camber, caster or kingpin inclination is not within specification, inspect front suspension parts. Replace damaged or worn out parts.

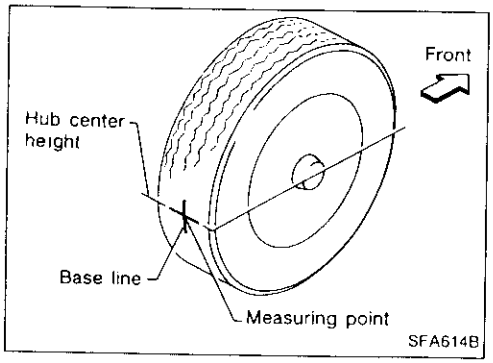

TOE-IN

Measure toe-in using following procedure. If out of specification, inspect and replace any damaged or worn front suspension parts.

WARNING:

- **Perform following procedure always on a flat surface.**
- **Make sure that no person is in front of the vehicle before pushing it.**

1. Move rear of vehicle up and down to stabilize the posture.
2. Push the vehicle straight ahead about 5 m (196.9 in).
3. Put a mark on base line of the tread (rear side) at the same height of hub center to be a measuring point.
4. Measure distance "A" (rear side).
5. Push the vehicle slowly ahead to turn the wheels around 180 degrees.

If the wheels have passed 180 degrees, try the above procedure again from the beginning. Never push vehicle backward.

6. Measure distance "B" (front side).
   Toe-in (A – B):
   Refer to SDS (FA-15).

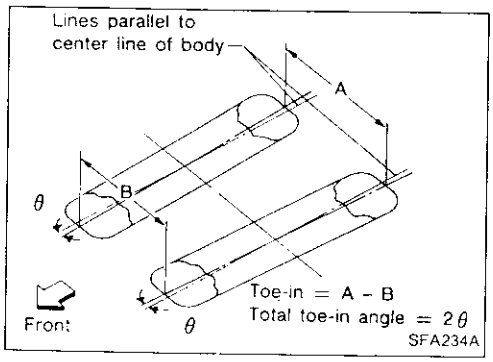

7. Adjust toe-in by varying length of steering tie-rods.
   a. Loosen lock nuts.
   b. Adjust toe-in by turning forward and reverse tie-rod.

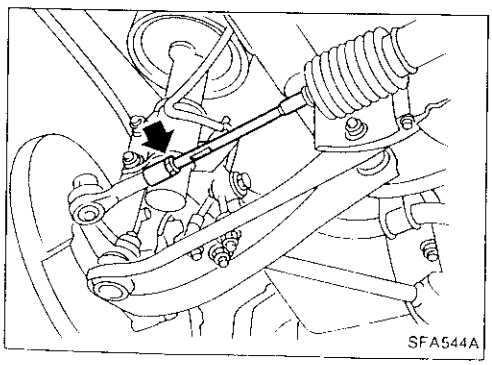

Front Wheel Alignment (Cont'd)

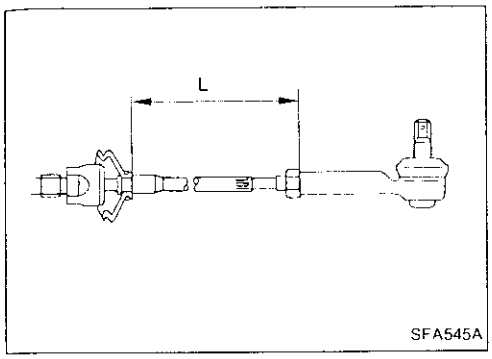

Make sure both tie-rods are the same length.

Standard length "L":

Refer to SDS in ST section.

c. Tighten lock nuts to specified torque.

Lock nut tightening torque:

Refer to ST section.

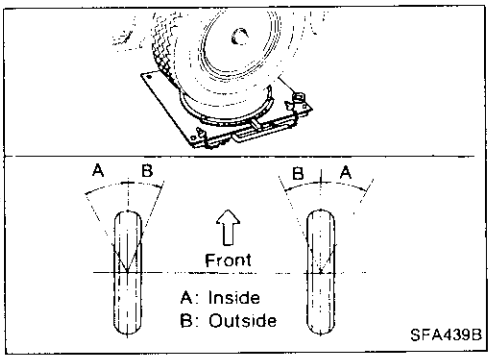

FRONT WHEEL TURNING ANGLE

Turning angle is set by stroke length of steering gear rack and cannot be adjusted.

1. Set wheels in straight-ahead position. Then move vehicle forward until front wheels rest on turning radius gauge properly.
2. Rotate steering wheel all the way right and left; measure turning angle.

Do not hold the steering wheel on full lock for more than 15 seconds.

Wheel turning angle (Full turn):

Refer to SDS (FA-15).

Wheel Hub and Knuckle

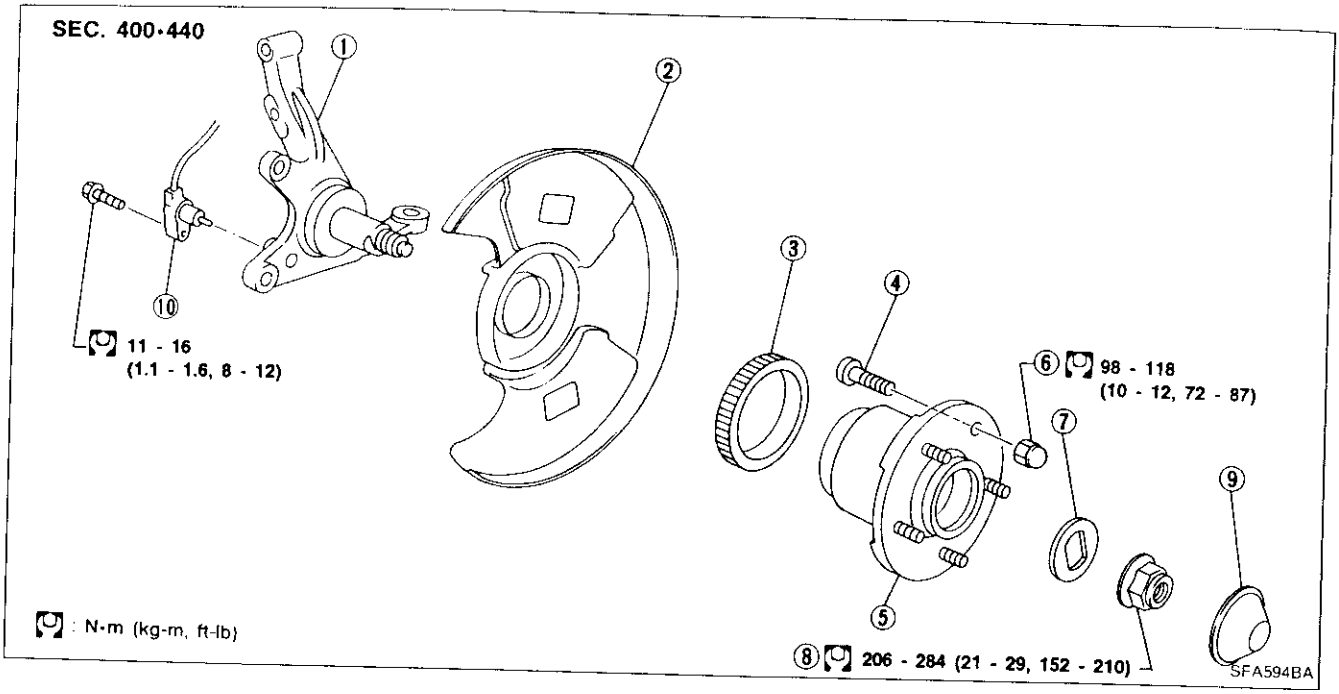

① Knuckle spindle
② Baffle plate
③ ABS ring
④ Hub bolt
⑤ Wheel hub bearing
⑥ Wheel nut
⑦ Lock washer
⑧ Wheel bearing lock nut
⑨ Hub cap
⑩ ABS sensor

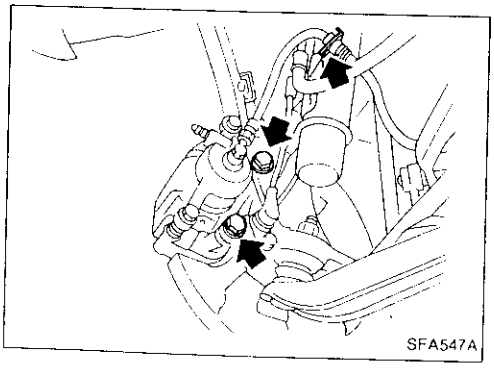

REMOVAL

CAUTION:

Wheel hub bearing usually does not require maintenance. If any of the following symptoms are noted, replace wheel hub bearing assembly.

- Growling noise is emitted from wheel hub bearing during operation.
- Wheel hub bearing drags or turns roughly. This occurs when turning hub by hand after bearing lock nut is tightened to specified torque.
- If the wheel hub bearing assembly is removed, it must be renewed. The old assembly must not be re-used.

Remove brake caliper assembly and rotor.

Before removing the front axle assembly, disconnect the ABS wheel sensor from the assembly. Then move it away from the front axle assembly area.

Failure to do so may result in sensor wires being damaged and the sensor becoming inoperative.

Suspend caliper assembly with wire so as not to stretch brake hose.

Be careful not to depress brake pedal, or piston will pop out.

Wheel Hub and Knuckle (Cont'd)

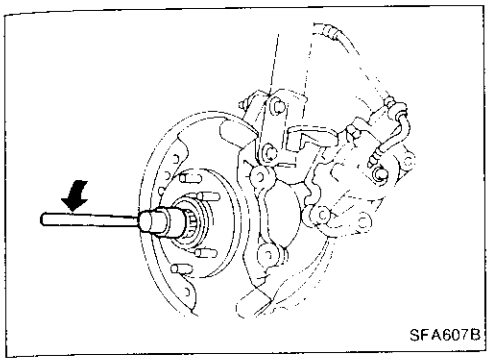

- Remove wheel bearing lock nut. Remove wheel hub from spindle.

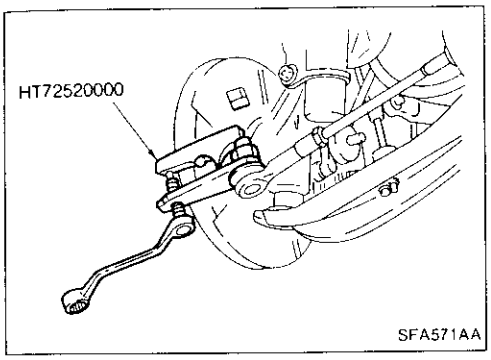

- Remove tie-rod ball joint and lower ball joint.

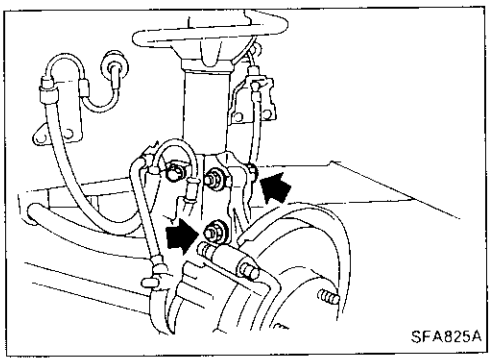

- Disconnect knuckle from strut.

INSTALLATION

- Install wheel hub.
- Tighten wheel bearing lock nut.
  [O]: **206 - 284 N·m**
  (21 - 29 kg-m, 152 - 210 ft-lb)

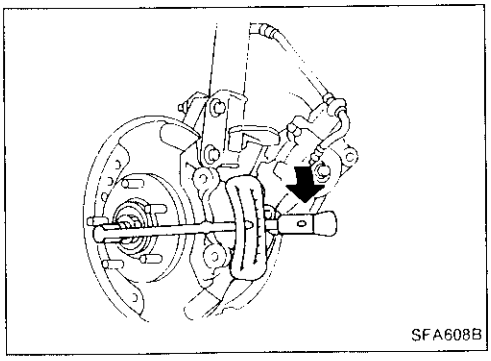

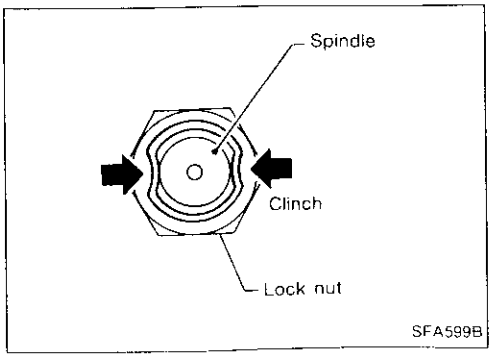

- Clinch two places of lock nut.

Wheel Hub and Knuckle (Cont'd)

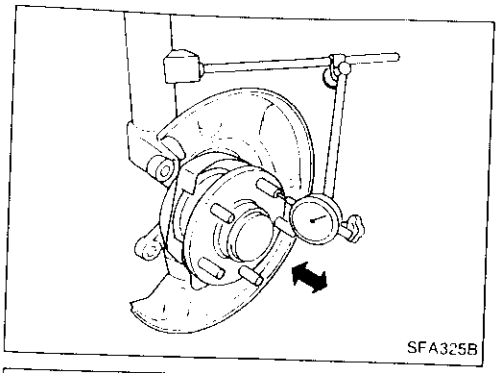
SFA325B

- Check wheel bearing axial end play.
  Axial end play: 0.05 mm (0.0020 in) or less

ABS Sensor Rotor

REMOVAL

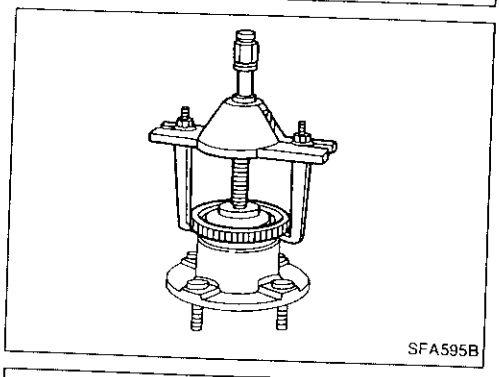
SFA595B

Remove ABS sensor rotor (models equipped with ABS) or labyrinth plate (models without ABS) with suitable tool.

INSTALLATION

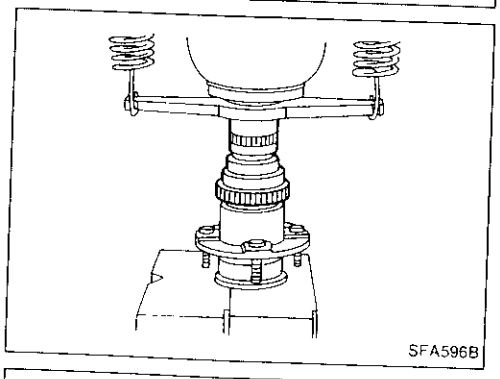
SFA596B

Press-fit ABS sensor rotor or labyrinth plate.

Baffle Plate

REMOVAL

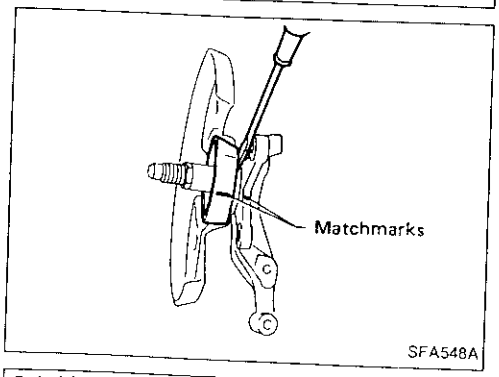

SFA548A

- Mark matchmarks on baffle plate before removing.
- If baffle plate replacement requires removal of knuckle spindle, separate it equally using a screwdriver.

Be careful not to scratch knuckle spindle.

INSTALLATION

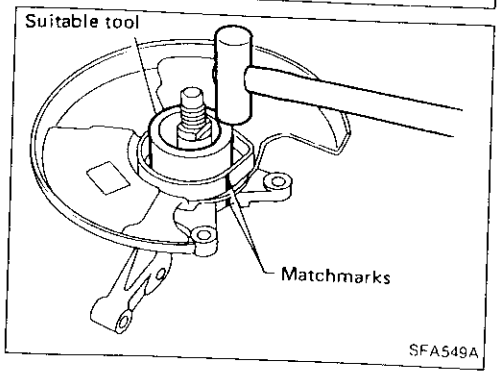

SFA549A

With matchmarks aligned, install baffle plate by tapping it with a copper hammer and a suitable tool.

SEC. 401

When installing rubber parts, final tightening must be carried out under unladen condition* with tires on ground.

* Fuel, radiator coolant and engine oil full. Spare tire, jack, hand tools and mats in designated positions.

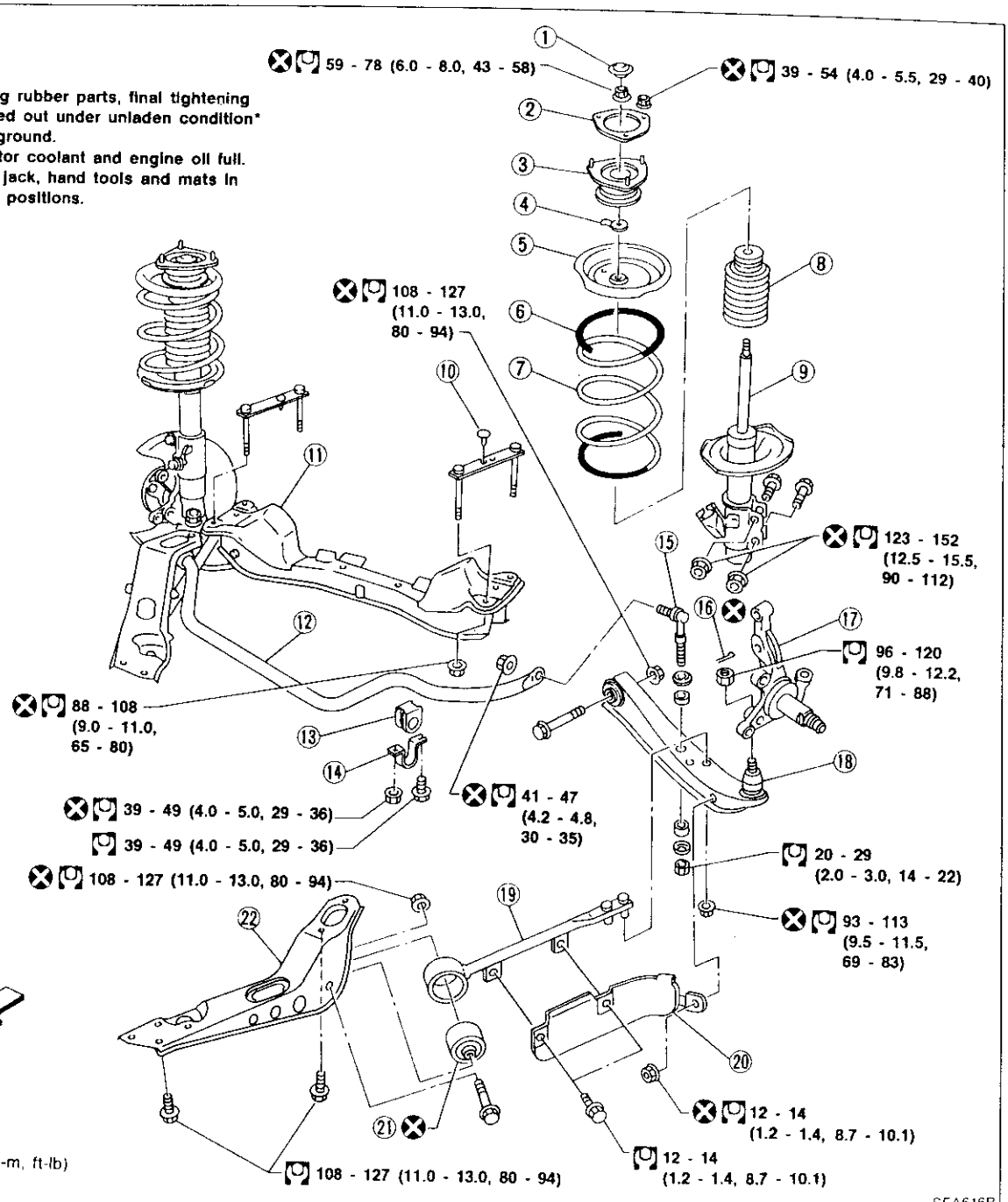

① Cap
② Gasket
③ Strut mounting insulator
④ Lock washer
⑤ Upper seat
⑥ (Polyurethane tube)
⑦ Coil spring
⑧ Bound bumper
⑨ Strut assembly
⑩ Plastic clip
⑪ Front suspension member
⑫ Stabilizer
⑬ Bushing
⑭ Clamp
⑮ Stabilizer connecting rod
⑯ Cotter pin
⑰ Knuckle spindle
⑱ Transverse link with ball joint
⑲ Tension rod
⑳ Air guide
㉑ Tension rod bushing
㉒ Tension rod bracket

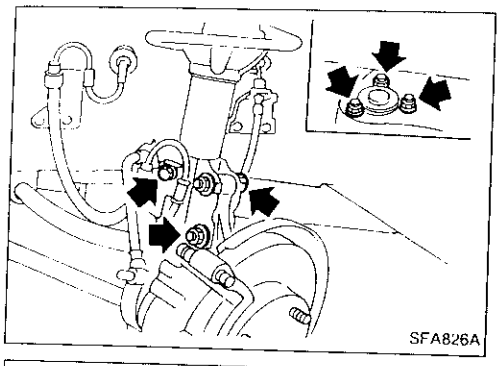

Coil Spring and Strut Assembly

REMOVAL

Remove strut assembly fixing bolts and nuts (to hoodledge).
Do not remove piston rod lock nut on vehicle.

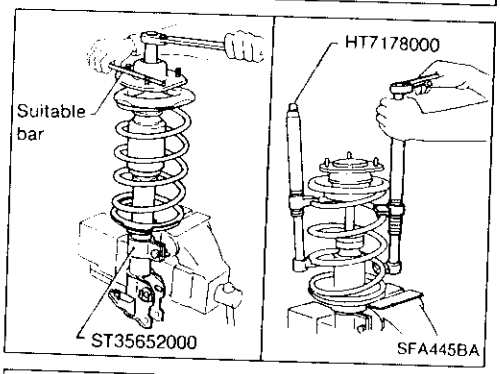

DISASSEMBLY

1. Set strut assembly on vise with Tool, then loosen piston rod lock nut.

Do not remove piston rod lock nut.

2. Compress spring with a Tool so that strut mounting insulator can be turned by hand.

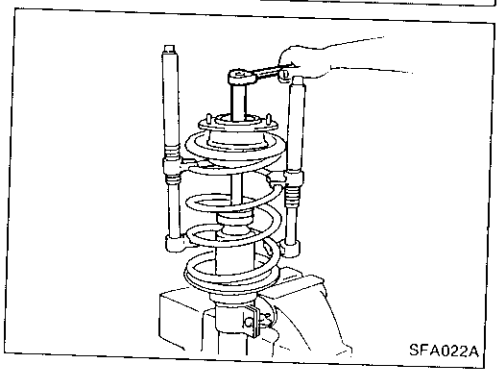

3. Remove piston rod lock nut.

INSPECTION

Strut assembly

- Check for smooth operation through a full stroke, both compression and extension.
- Check for oil leakage on welded or gland packing portion.
- Check piston rod for cracks, deformation or other damage. Replace if necessary.

Strut mounting insulator

- Check cemented rubber-to-metal portion for separation or cracks. Check rubber parts for deterioration.

Lock washer

Check for cracks, deformation or other damage. Replace if necessary.

Coil spring

Check for cracks, deformation or other damage. Replace if necessary.

Coil Spring and Strut Assembly (Cont'd)

ASSEMBLY

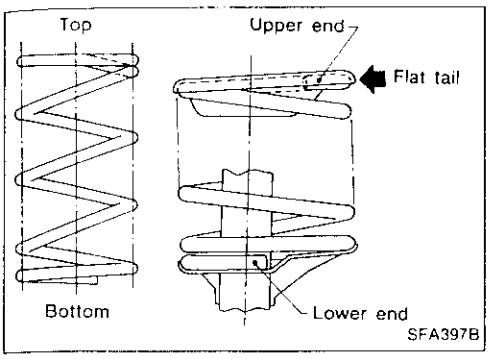

- When installing coil spring, be careful not to reverse top and bottom direction. (Top end is flat.)
- When installing coil spring on strut, it must be positioned as shown in figure at left.

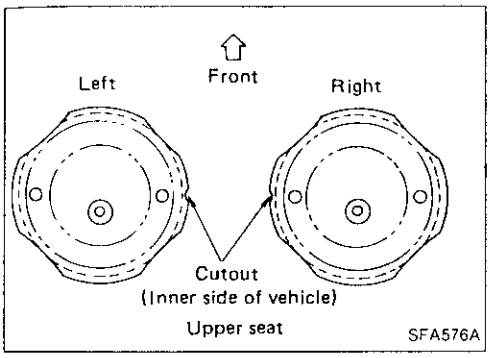

- Install upper spring seat with its cutout facing the inner side of vehicle.

Tension Rod and Stabilizer Bar

REMOVAL AND INSTALLATION

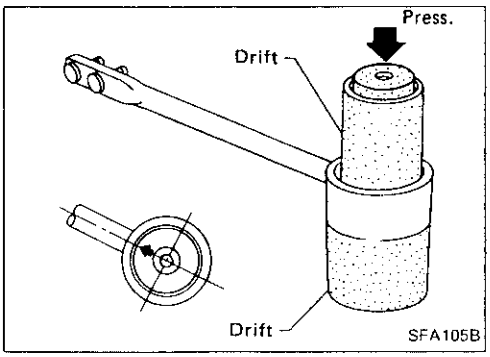

- Remove tension rod and stabilizer bar.
- Place one drift on lower side of tension rod bushing and another on upper side, as shown. Remove tension rod bushing by pressing it out.
- Place arrow mark on bushing facing tension rod before installing bushing.

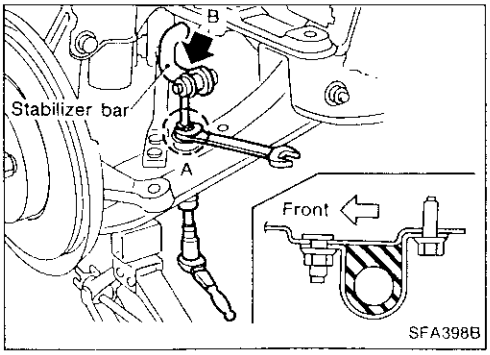

- Install stabilizer rear side bushings, then install front side bushings.
  When installing stabilizer bar clamp, make sure direction is correct (as shown at left).
- When removing and installing stabilizer bar, fix portion A.

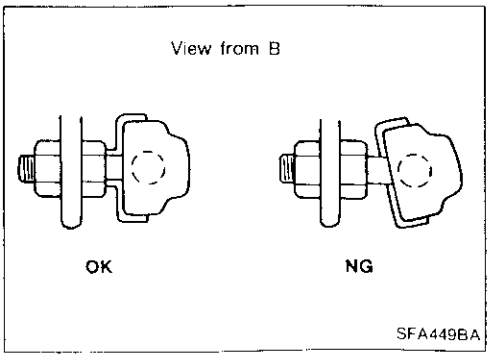

- Install stabilizer bar with ball joint socket properly placed.

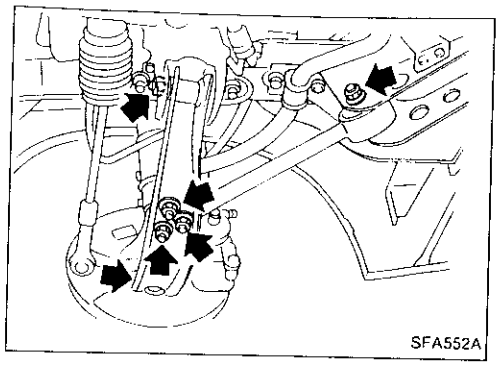
SFA552A

Transverse Link and Lower Ball Joint

REMOVAL AND INSTALLATION

- Remove stabilizer, tension rod, ball joint and transverse link assembly.
- During installation, final tightening must be carried out at curb weight with tires on ground.
- After installation, check wheel alignment.
  Refer to "Front Wheel Alignment" of ON-VEHICLE SERVICE (FA-5).

INSPECTION

Transverse link

- Check transverse link for damage, cracks or deformation. Replace it if necessary.
- Check rubber bushing for damage, cracks and deformation.
  Replace transverse link if necessary.

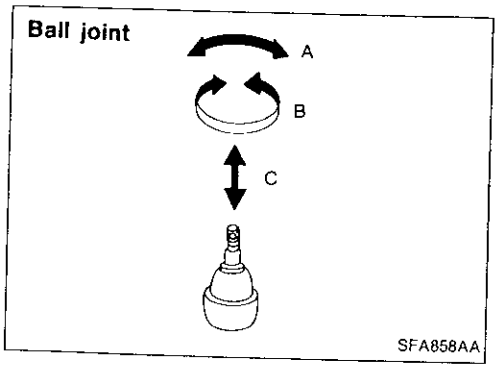

SFA858AA

Lower ball joint

- Check ball joint for play. Replace transverse link assembly in any of the following cases: Ball stud is worn, play in axial direction is excessive or joint is hard to swing.
  Before checking, turn ball joint at least 10 revolutions so that ball joint is properly broken in.
  Swinging force "A": Refer to SDS (FA-15).
  (measuring point: cotter pin hole of ball stud)
  Turning torque "B": Refer to SDS (FA-15).
  Vertical end play "C": Refer to SDS (FA-15).
- Check dust cover for damage. Replace it if necessary.

General Specifications

COIL SPRING

Unit: mm (in)

Applied model	All
Wire diameter	13.1 (0.516)
Coil outer diameter	183.2 (7.21)
Free length	310 (12.20)
Identification color	White x 1, White x 2

STRUT

Unit: mm (in)

Applied model	All
Piston rod diameter	22 (0.87)

FRONT STABILIZER BAR

Unit: mm (in)

Applied model	All
Stabilizer diameter	26.5 (1.043)
Identification color	Red

Inspection and Adjustment

WHEEL ALIGNMENT (Unladen*1)

Applied model	Europe	Australia	Except Europe and Australia
Camber degree	−1°35′ to −0°05′	−1°30′ to 0°	
Caster degree	5°55′ - 7°25′	6°00′ - 7°30′	
Toe-in			
A - B mm (in)	1 - 3 (0.04 - 0.12)	1.5 - 3.5 (0.059 - 0.138)	
Total angle 2θ degree	5′ - 16′	8′ - 19′	
Kingpin inclination degree	12°55′ - 14°25′		12°50′ - 14°20′
Front wheel turning angle			
Full turn*2 inside/outside degree	39° - 43°/ 33°05′	39° - 43°/33°10′	

*1: Fuel, radiator coolant and engine oil full. Spare tire, jack, hand tools and mats in designated positions.

*2: On power steering models, wheel turning force (at circumference of steering wheel) of 98 to 147 N (10 to 15 kg, 22 to 33 lb) with engine at idle.

WHEEL BEARING

Wheel bearing axial end play mm (in)	0.05 (0.0020) or less
Wheel bearing lock nut	
Tightening torque N·m (kg-m, ft-lb)	206 - 284 (21 - 29, 152 - 210)

LOWER BALL JOINT

Swinging force "A" (Measuring point: cotter pin hole of ball stud) N (kg, lb)	23.5 - 79.4 (2.4 - 8.1, 5.3 - 17.9)
Turning torque "B" N·m (kg-cm, in-lb)	1.5 - 4.9 (15 - 50, 13 - 43)
Vertical end play "C" mm (in)	0 (0)

WHEEL RUNOUT (Radial and lateral)

Wheel type	Radial runout	Lateral runout
Aluminum wheel mm (in)	0.3 (0.012) or less	
Steel wheel mm (in)	0.7 (0.028) or less	1.0 (0.039) or less

REAR AXLE & REAR SUSPENSION

SECTION RA

CONTENTS

PRECAUTIONS AND PREPARATION 2
- Precautions 2
- Special Service Tools 2
- Commercial Service Tools 3

REAR SUSPENSION SYSTEM 4

ON-VEHICLE SERVICE 5
- Rear Axle and Rear Suspension Parts 5
- Rear Wheel Bearing 5
- Rear Wheel Alignment 5
- Drive Shaft 6

REAR AXLE 7
- Wheel Hub and Axle Housing 7
- Drive Shaft 11

REAR SUSPENSION 17
- Removal and Installation 18
- Coil Spring and Shock Absorber 19
- Multi-link and Lower Ball Joint 20
- Stabilizer Bar 21

SERVICE DATA AND SPECIFICATIONS (SDS) 22
- General Specifications 22
- Inspection and Adjustment 23

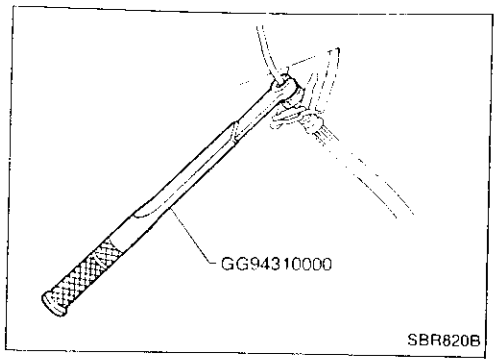

Precautions

- When installing rubber parts, final tightening must be carried out under unladen condition* with tires on ground.
  *: Fuel, radiator coolant and engine oil full. Spare tire, jack, hand tools and mats in designated positions.
- Use flare nut wrench when removing or installing brake tubes.
- After installing removed suspension parts, check wheel alignment and adjust if necessary.
- Always torque brake lines when installing.
- Do not jack up at the lower arm.

Special Service Tools

Tool number Tool name	Description	
HT71780000 Spring compressor	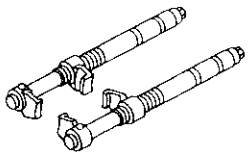 NT144	Removing and installing coil spring
ST35652000 Strut attachment	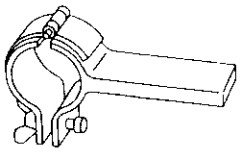 NT145	Fixing strut assembly
ST30031000 Bearing puller	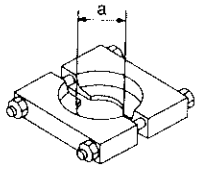 NT412	Removing inner race of wheel bearing **a: 50 mm (1.97 in) dia.**
ST38280000 Arm bushing remover	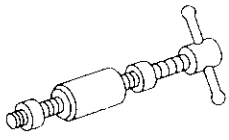 NT157	Removing and installing bushing of rear axle housing
GG94310000 Flare nut torque wrench	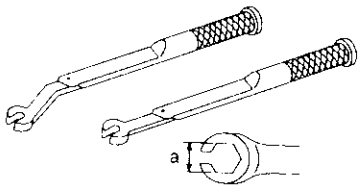 NT406	Removing and installing brake piping **a: 10 mm (0.39 in) dia.**

Commercial Service Tools

Tool name	Description	
Equivalent to GG94310000 ① Flare nut crows foot ② Torque wrench	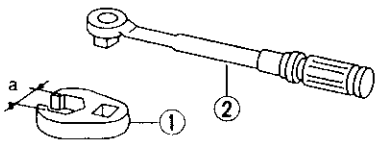 NT360	Removing and installing brake piping **a: 10 mm (0.39 in)**
Attachment Wheel alignment	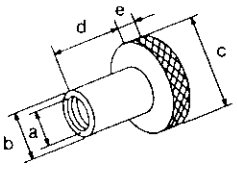 NT148	Measure rear wheel alignment **a: Screw M24 x 1.5** **b: 35 mm (1.38 in) dia.** **c: 65 mm (2.56 in) dia.** **d: 56 mm (2.20 in)** **e: 12 mm (0.47 in)**
Rear wheel hub drift	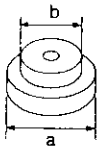 NT073	Installing wheel bearing **a: 49 mm (1.93 in) dia.** **b: 41 mm (1.61 in) dia.**
Wheel bearing drift	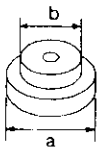 NT073	Removing rear wheel hub **a: 40 mm (1.57 in) dia.** **b: 26 mm (1.02 in) dia.**
Rear drive shaft plug seal drift	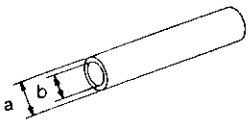 NT065	Installing rear drive shaft plug seal **a: 85 mm (3.35 in) dia.** **b: 67 mm (2.64 in) dia.**

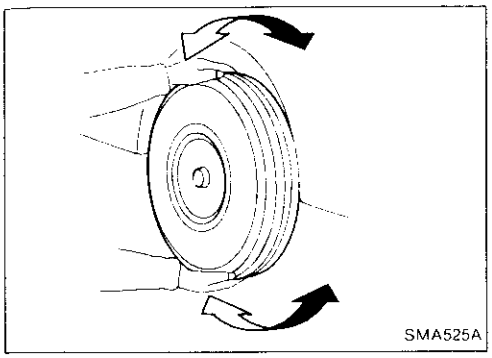
SMA525A

Rear Axle and Rear Suspension Parts

Check axle and suspension parts for looseness, wear or damage.

- Shake each rear wheel.
- Retighten all axle and suspension nuts and bolts to the specified torque.
  Tightening torque:
  Refer to REAR SUSPENSION (RA-17).
- Make sure that cotter pins are inserted.

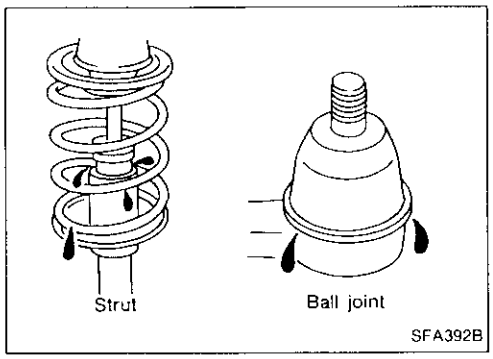

SFA392B

- Check shock absorber for oil leakage or other damage.
- Check suspension lower ball joint for excessive play.
- Check suspension ball joint for grease leakage and ball joint dust cover for cracks or other damage.

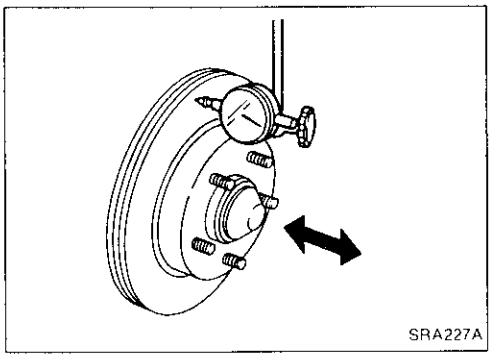
SRA227A

Rear Wheel Bearing

- Check wheel bearings smooth operation.
- Check axial end play.
  Axial end play:
  0.05 mm (0.0020 in) or less
- If out of specification or wheel bearing does not turn smoothly, replace wheel bearing assembly.
  Refer to REAR AXLE — Wheel Hub and Axle Housing (RA-7).

RA

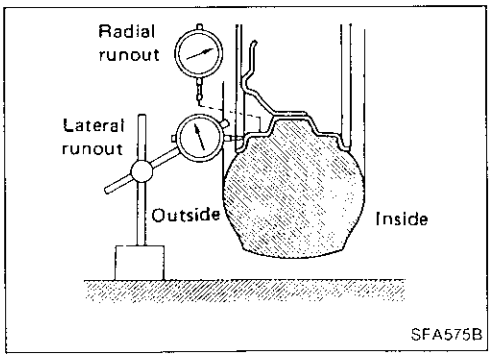

SFA575B

Rear Wheel Alignment

Before checking rear wheel alignment, be sure to make a preliminary inspection.

PRELIMINARY INSPECTION

Make following checks. Adjust, repair or replace if necessary.

- Check tires for wear and for improper inflation.
- Check rear wheel bearings for looseness.
- Check wheel runout.
  Refer to SDS in FA section.
- Check that rear shock absorber works properly.
- Check rear axle and rear suspension parts for looseness.
- Check vehicle posture (Unladen).
  ("Unladen": Fuel tank, radiator and engine oil full. Spare tire, jack, hand tools and mats in designated positions.)

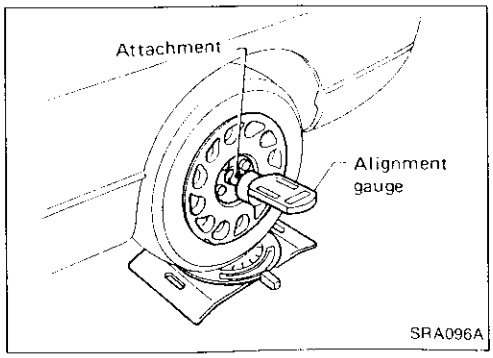

SRA096A

CAMBER

Measure camber of both right and left wheels with a suitable alignment gauge and adjust in accordance with the following procedures.

Camber:
Refer to SDS (RA-23).

SEC. 431

When installing rubber parts, final tightening must be carried out under unladen condition* with tires on ground.

* Fuel, radiator coolant and engine oil full. Spare tire, jack, hand tools and mats in designated positions.

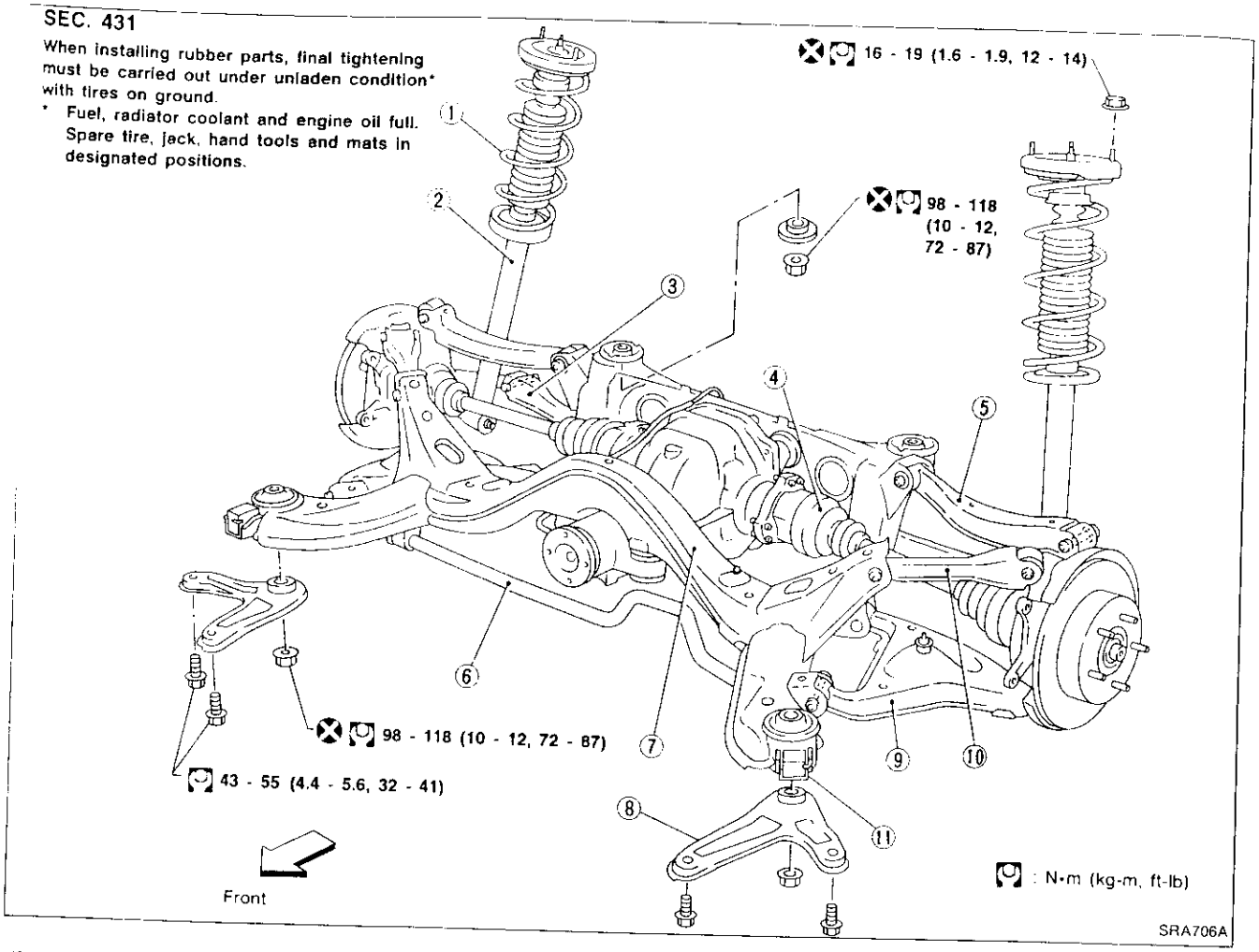

1. Coil spring
2. Shock absorber
3. Lateral link
4. Drive shaft
5. Rear upper link
6. Stabilizer bar
7. Suspension member
8. Member stay
9. Lower arm
10. Front upper link
11. Dynamic damper assembly

Rear Wheel Alignment (Cont'd)

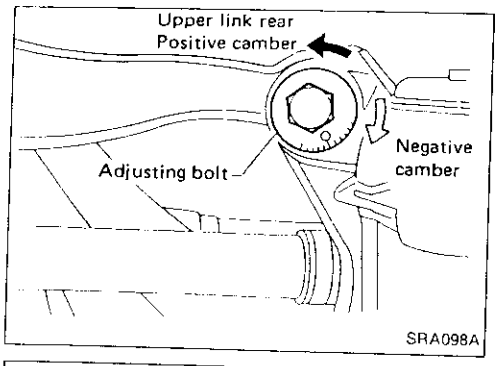

- If camber is not within specification, adjust by turning the adjusting bolt.

1. Turn the adjusting bolt to adjust.
   Camber changes about 4' with each graduation of the adjusting bolt.
2. Tighten to the specified torque.
   : 69 - 88 N·m
   (7.0 - 9.0 kg-m, 51 - 65 ft-lb)

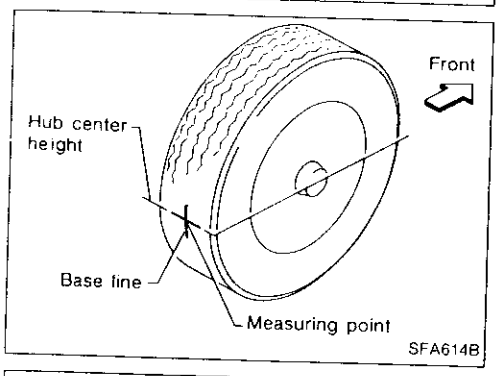

TOE-IN

Measure toe-in using following procedure. If out of specification, inspect and replace any damaged or worn rear suspension parts.

WARNING:

- **Perform following procedure always on a flat surface.**
- **Make sure that no person is in front of the vehicle before pushing it.**

1. Move rear of vehicle up and down to stabilize the posture.
2. Push the vehicle straight ahead about 5 m (196.9 in).
3. Put a mark on base line of the tread (rear side) at the same height of hub center to be a measuring point.
4. Measure distance "A" (rear side).
5. Push the vehicle slowly ahead to turn the wheels around 180 degrees.

If the wheels have passed 180 degrees, try the above procedure again from the beginning. Never push vehicle backward.

6. Measure distance "B" (front side).
   Toe-in (A – B):
   Refer to SDS (RA-23).

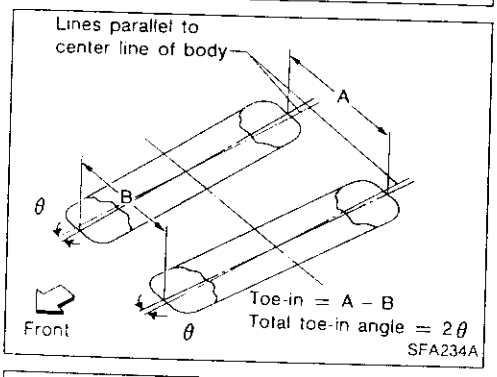

7. Adjust toe-in by turning adjusting bolts.
   Toe changes about 1.3 mm (0.051 in) [One side] with each graduation of the adjusting bolt.
8. Tighten to the specified torque.
   : 69 - 88 N·m
   (7.0 - 9.0 kg-m, 51 - 65 ft-lb)

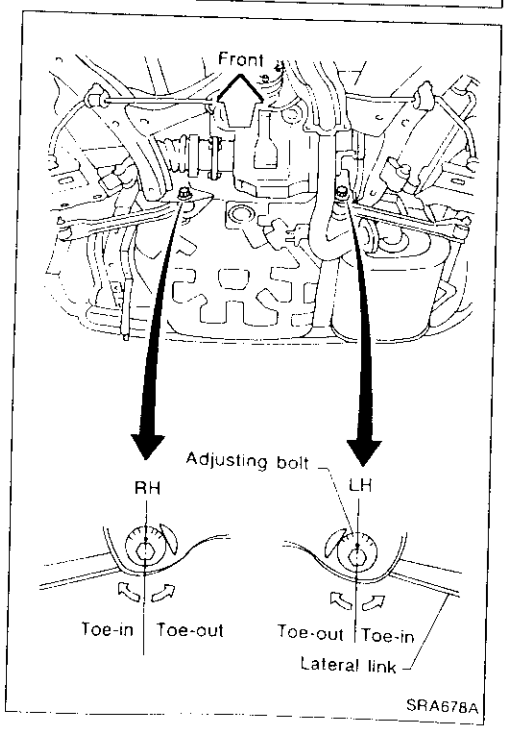

Drive Shaft

Check boot and drive shaft for cracks,wear,damage or grease leakage.

Wheel Hub and Axle Housing

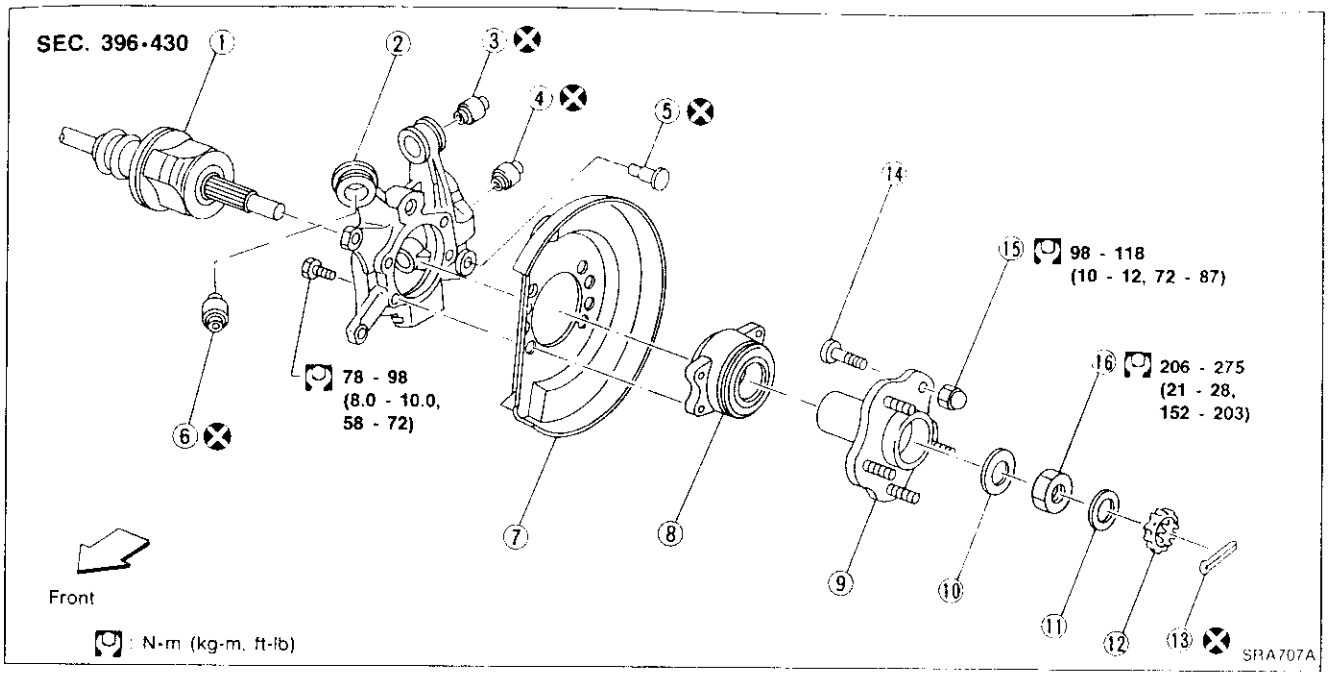

① Drive shaft
② Axle housing
③ Bushing
④ Bushing
⑤ Shock absorber pin
⑥ Bushing
⑦ Baffle plate
⑧ Wheel bearing with flange
⑨ Wheel hub
⑩ Plain washer
⑪ Insulator
⑫ Adjusting cap
⑬ Cotter pin
⑭ Hub bolt
⑮ Wheel nut
⑯ Wheel bearing lock nut

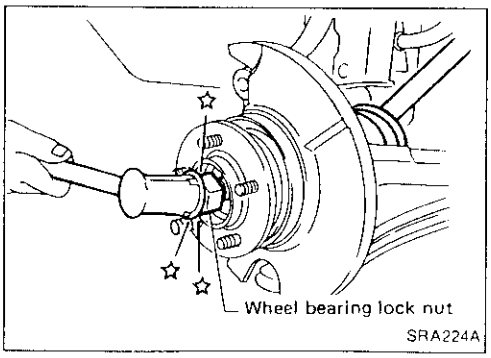

REMOVAL

1. Remove wheel bearing lock nut.
2. Separate drive shaft from axle housing by lightly tapping it. If it is hard to remove use puller.

When removing drive shaft, cover boots with shop towel to prevent them from being damaged.

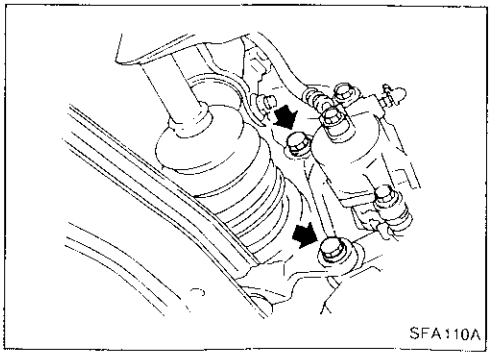

3. Remove brake caliper assembly and rotor.

Suspend caliper assembly with wire so as not to stretch brake hose.

Be careful not to depress brake pedal or piston will pop out.

Wheel Hub and Axle Housing (Cont'd)

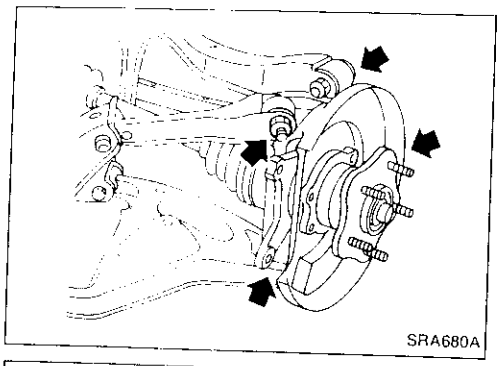
SRA680A

4. Remove axle housing.

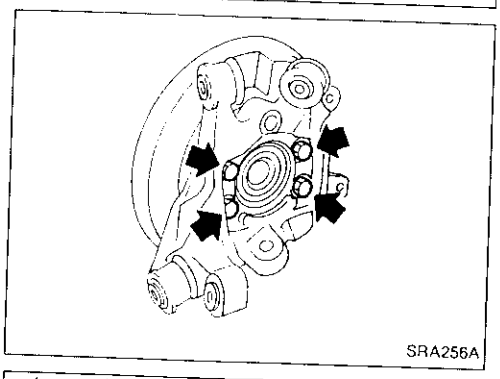
SRA256A

5. Remove wheel bearing with flange, and wheel hub from axle housing.

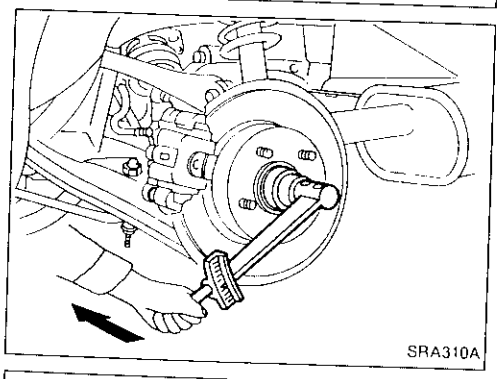
SRA310A

INSTALLATION

1. Install axle housing with wheel hub.
2. Tighten wheel bearing lock nut.
   Before tightening, apply oil to threaded portion of rear spindle and both sides of plain washer.
   : 206 - 275 N·m
   (21 - 28 kg-m, 152 - 203 ft-lb)

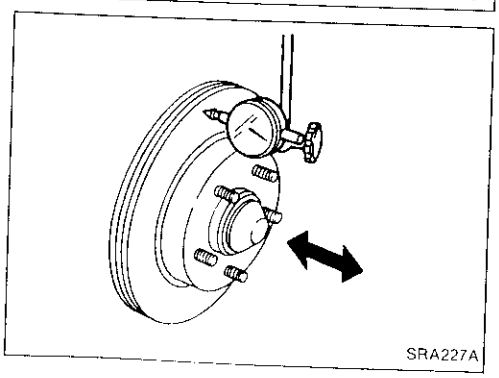
SRA227A

3. Check wheel bearing axial end play.
   Axial end play: 0.05 mm (0.0020 in) or less
   Make sure that wheel bearings operate smoothly.
4. Check toe-in — Refer to ON-VEHICLE SERVICE (RA-6).

Wheel Hub and Axle Housing (Cont'd)

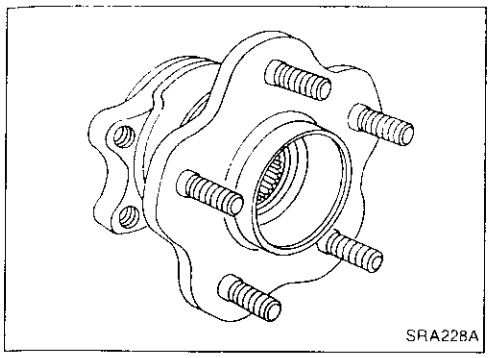

DISASSEMBLY

CAUTION:

Wheel bearing with flange usually does not require maintenance. If any of the following symptoms are noted, replace wheel bearing assembly (including flange, and inner and outer seals).

- **Growling noise is emitted from wheel bearing during operation.**
- **Wheel hub bearing drags or turns roughly. This occurs when turning hub by hand after bearing lock nut is tightened to specified torque.**
- **After wheel bearing is removed from hub.**

Wheel hub

Remove wheel bearing (with flange) and wheel hub as one unit from axle housing before disassembling.

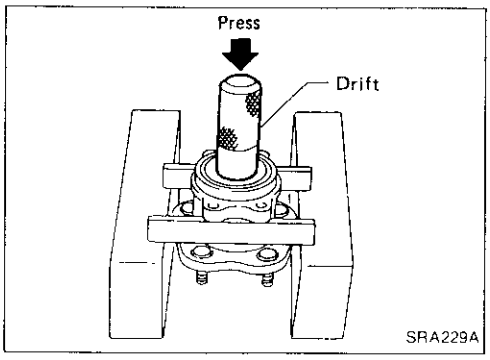

Wheel bearing

1. Using a press and drift as shown in figure at left, press wheel bearing out.
2. Discard old wheel bearing assembly. Replace with a new one.

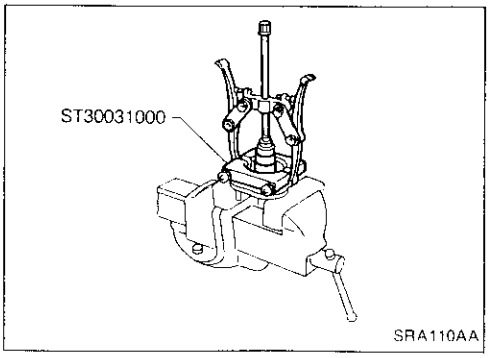

3. Remove inner race from hub using a bearing replacer/puller.

CAUTION:

- **Do not reuse old inner race although it is of the same brand as the bearing assembly.**
- **Do not replace grease seals as single parts.**

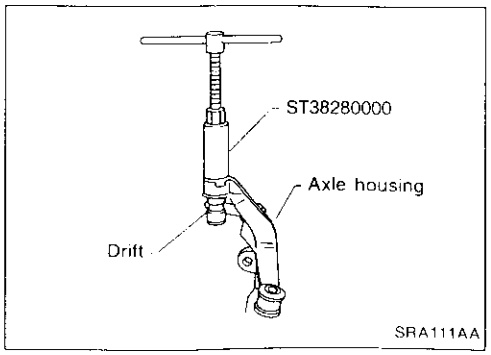

Axle housing

1. Attach a drift on outer shell of bushing as shown in figure at left. Remove bushing using arm bushing remover.

When placing axle housing in a vise, use wooden blocks or copper plates as pads.

Wheel Hub and Axle Housing (Cont'd)

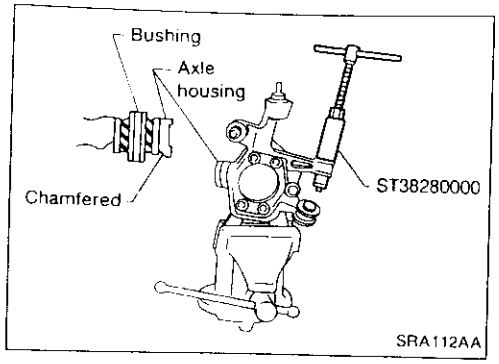

2. Ensure axle housing bore is free from scratches or deformities before pressing bushing into it.
3. Attach bushing to chamfered bore end of axle housing. Then press it until it is flush with end face of axle housing.

INSPECTION

Wheel hub and axle housing

- Check wheel hub and axle housing for cracks by using a magnetic exploration or dyeing test.
- Check wheel bearing for damage, seizure, rust or rough operation.
- Check rubber bushing for wear or other damage. Replace if necessary.

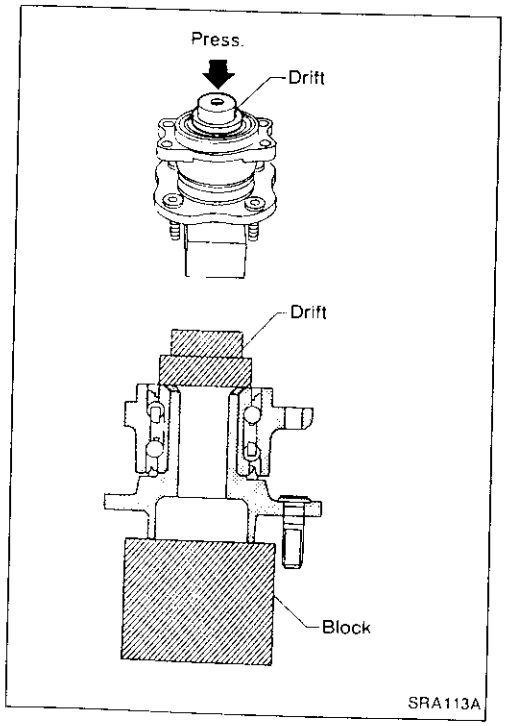

ASSEMBLY

Place hub on a block. Attach a drift to inner race of wheel bearing and press it into hub as shown.
Be careful not to damage grease seal.

Drive Shaft

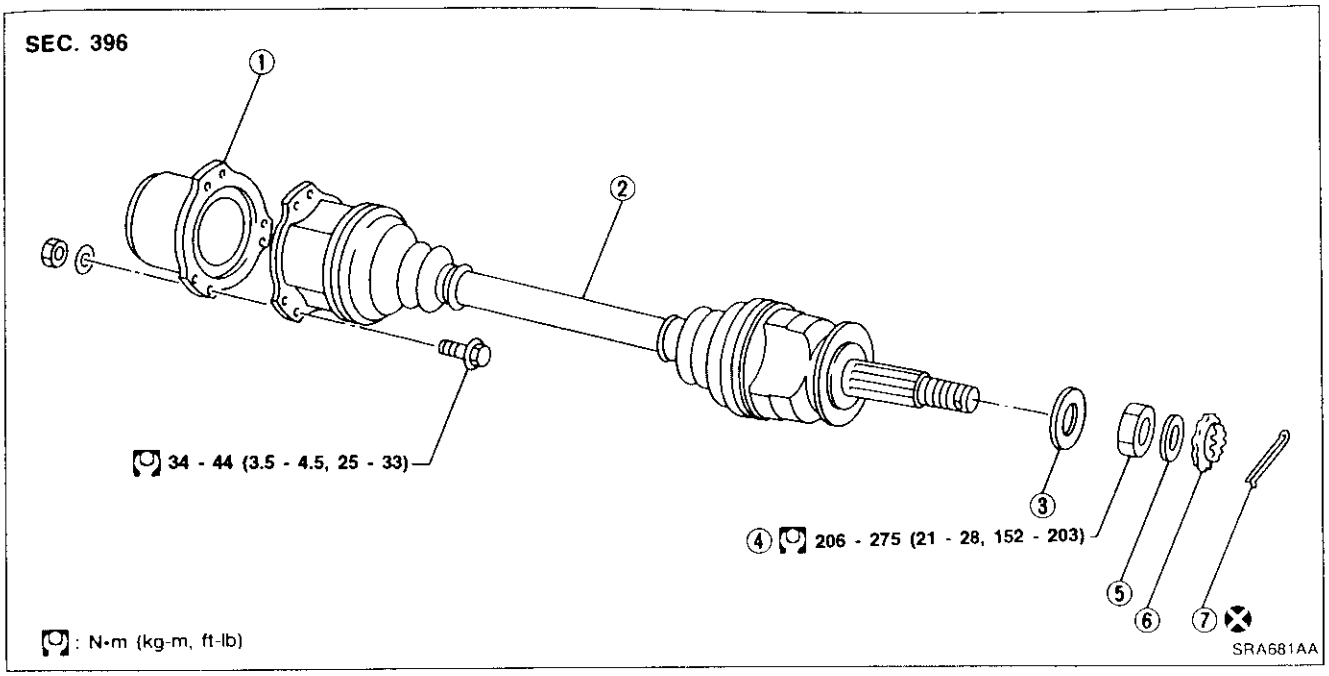

① Side flange
② Drive shaft
③ Plain washer
④ Wheel bearing lock nut
⑤ Insulator
⑥ Adjusting cap
⑦ Cotter pin

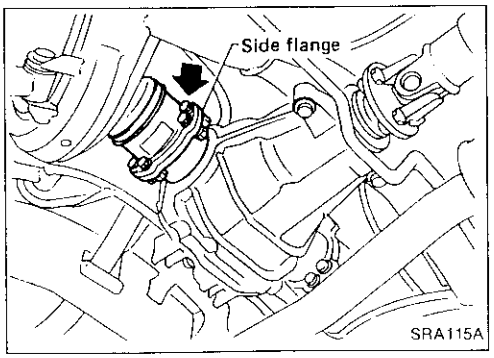

REMOVAL

When removing drive shaft, cover boots with shop towel to prevent damage to them.

Final drive side

Remove side flange mounting bolt and separate shaft.

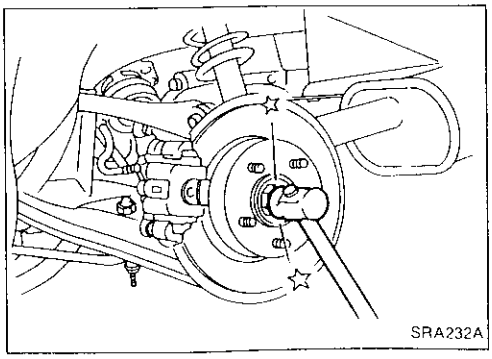

Wheel side

Remove drive shaft by lightly tapping it with a copper hammer. If it is hard to remove, use puller.

To avoid damaging threads of drive shaft, install a nut while removing drive shaft.

INSTALLATION

1. Insert drive shaft from wheel hub and temporarily tighten wheel bearing lock nut.
2. Tighten side flange mounting bolts to specified torque.
3. Tighten wheel bearing lock nut to specified torque.

Drive Shaft (Cont'd)

COMPONENTS

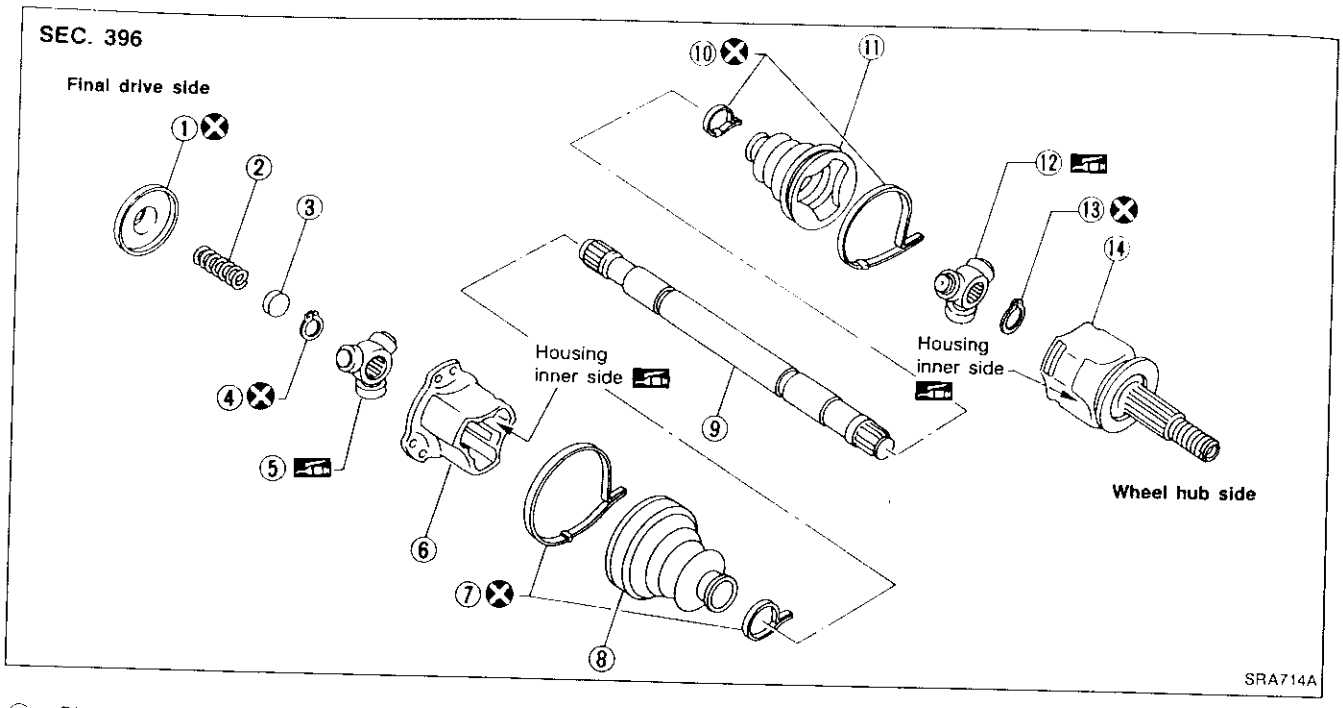

① Plug seal
② Spring
③ Spring cap
④ Snap ring
⑤ Spider assembly
⑥ Slide joint housing
⑦ Boot band
⑧ Boot
⑨ Drive shaft
⑩ Boot band
⑪ Boot
⑫ Spider assembly
⑬ Snap ring
⑭ Housing with shaft

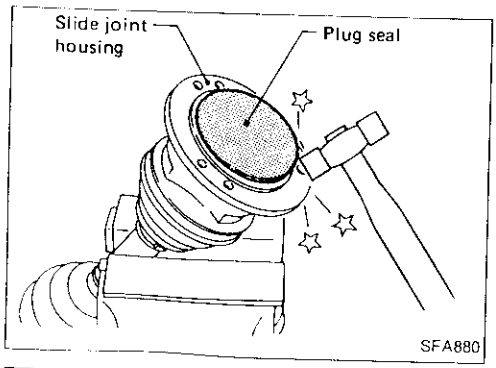

DISASSEMBLY

Final drive side

1. Remove plug seal from slide joint housing by lightly tapping around slide joint housing.

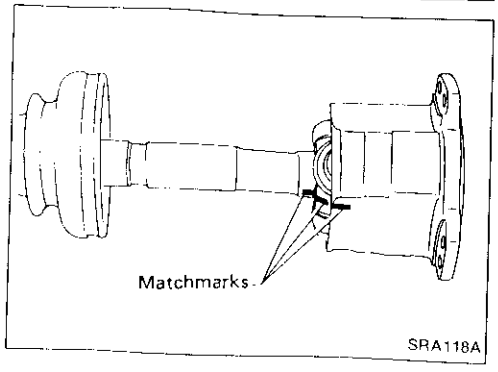

2. Remove boot bands.
3. Put matchmarks on slide joint housing and drive shaft before separating joint assembly.
4. Put matchmarks on spider assembly and drive shaft.

Drive Shaft (Cont'd)

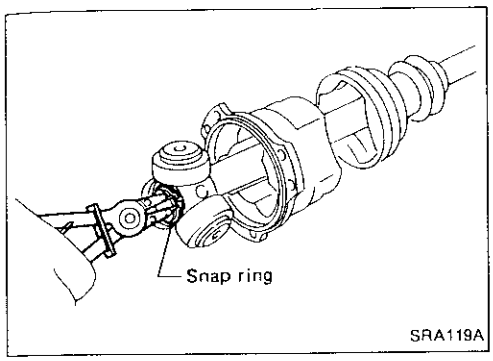

5. Pry off snap ring, then remove spider assembly.

CAUTION:
Do not disassemble spider assembly.

6. Draw out slide joint housing.
7. Draw out boot.

Cover drive shaft serration with tape to prevent damage to the boot.

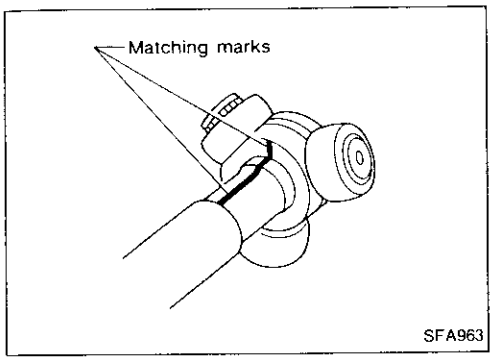

Wheel side

1. Remove boot bands.
2. Put matchmarks on housing together with shaft and drive shaft before separating joint assembly.
3. Put matchmarks on spider assembly and drive shaft.

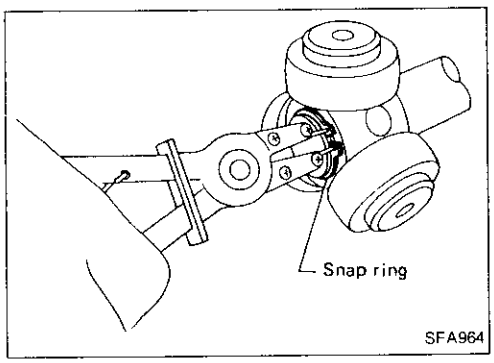

4. Pry off snap ring, then remove spider assembly.

CAUTION:
Do not disassemble spider assembly.

5. Draw out boot.

Cover drive shaft serration with tape to prevent damage to the boot.

RA

INSPECTION

Thoroughly clean all parts in cleaning solvent, and dry with compressed air. Check parts for deformation or other damage.

Drive shaft

Replace drive shaft if it is twisted or cracked.

Boot

Check boot for fatigue, cracks, or wear. Replace boot with new boot bands.

Drive Shaft (Cont'd)

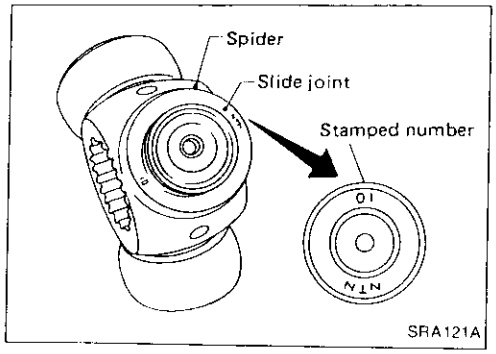

Joint assembly

- Check spider assembly for bearing, roller and washer damage. Replace spider assembly if necessary.
- Check housing for any damage. Replace housing set and spider assembly, if necessary.
- When replacing only spider assembly, select a new spider assembly from among those listed in table below. Ensure the number stamped on sliding joint is the same as that stamped on new part.

Housing alone cannot be replaced. It must be replaced together with spider assembly.

Stamped number	Part No.
00	39720 10V10
01	39720 10V11
02	39720 10V12

ASSEMBLY

- **After drive shaft has been assembled, ensure it moves smoothly over its entire range without binding.**
- **Use NISSAN GENUINE GREASE or equivalent after every overhaul.**

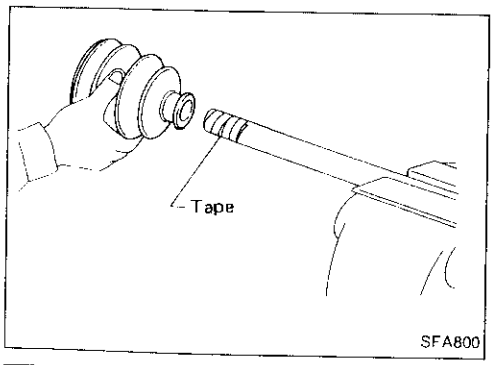

Wheel side

1. Install new small boot band and boot on drive shaft.

Cover drive shaft serration with tape to prevent damage to boot during installation.

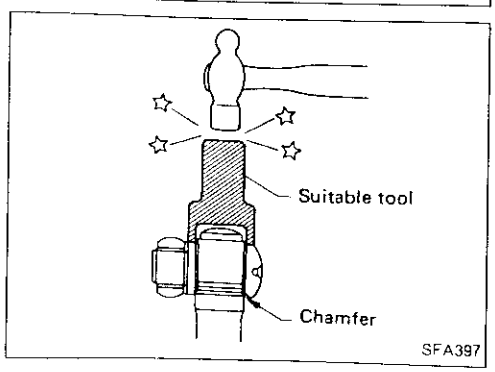

2. Install spider assembly securely, making sure marks are properly aligned.

Press-fit with spider assembly serration chamfer facing shaft.

3. Install new snap ring.

Drive Shaft (Cont'd)

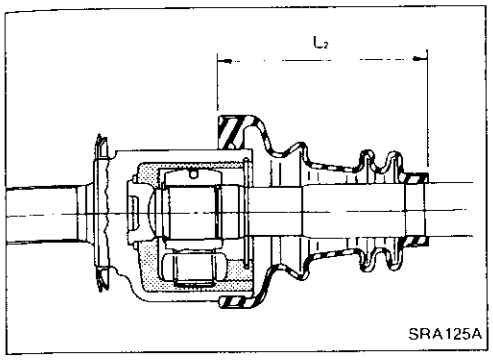

4. Pack drive shaft with specified amount of grease.
   Specified amount of grease:
   135 - 145 g (4.76 - 5.11 oz)
5. Install slide joint housing, then install new snap ring.
6. Set boot so that it does not swell and deform when its length is "L_2".
   Length "L_2":
   95 - 97 mm (3.74 - 3.82 in)

Make sure that boot is properly installed on the drive shaft groove.

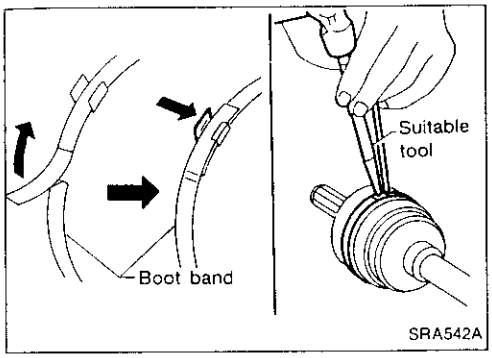

7. Lock new larger and smaller boot bands securely with a suitable tool.

Final drive side

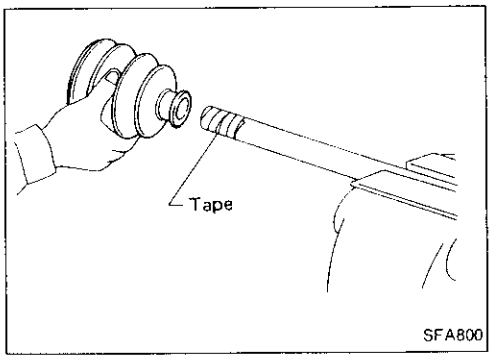

1. Install new small boot band, boot and slide joint housing to drive shaft.

Cover drive shaft serration with tape to prevent damage to boot during installation.

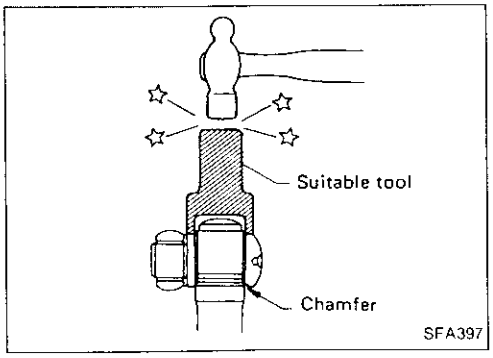

2. Install spider assembly securely, making sure marks are properly aligned.

Press-fit with spider assembly serration chamfer facing shaft.

3. Install new snap ring.

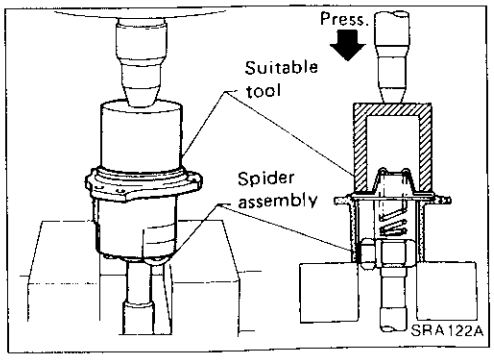

4. Install coil spring, spring cap and new plug seal to slide joint housing. Press plug seal.

Apply sealant to mating surface of plug seal.

CAUTION:

a. When pressing plug seal into place, hold it horizontally. This prevents spring inside it from tilting or falling down.

Drive Shaft (Cont'd)

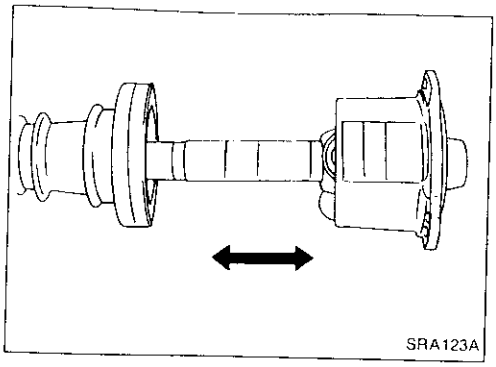

b. Move shaft in axial direction to ensure that spring is installed properly. If shaft drags or if spring is not properly installed, replace plug seal with a new one.

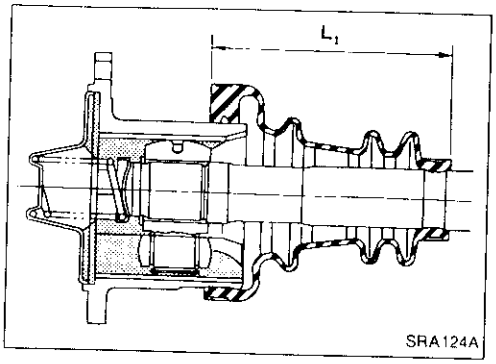

5. Pack drive shaft with specified amount of grease.
   Specified amount of grease:
   155 - 165 g (5.47 - 5.82 oz)
6. Set boot so that it does not swell and deform when its length is "L_1".
   Length "L_1":
   95 - 97 mm (3.74 - 3.82 in)

Make sure that boot is properly installed on the drive shaft groove.

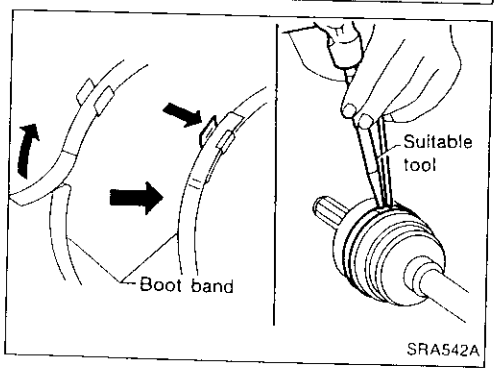

7. Lock new larger boot band securely with a suitable tool, then lock new smaller boot band.

SEC. 380•396•431

CAUTION:
Do not jack up at lower link.
When installing rubber parts, final tightening must be carried out under unladen condition* with tires on ground.
* Fuel, radiator coolant and engine oil full. Spare tire, jack, hand tools and mats in designated positions.

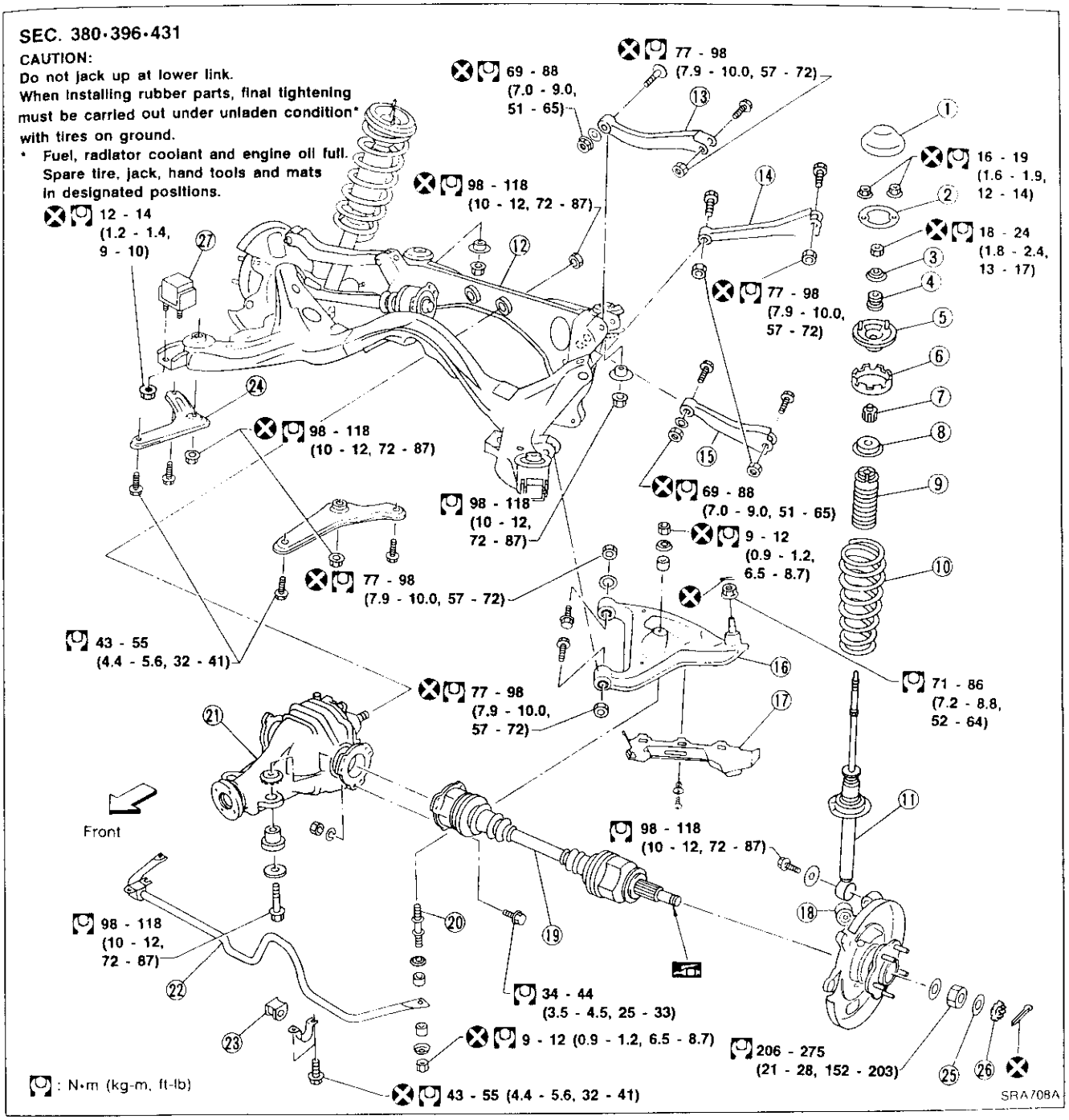

① Cap
② Gasket
③ Upper plate
④ Bushing
⑤ Upper spring seat
⑥ Upper rubber seat
⑦ Bushing
⑧ Plate
⑨ Bumper rubber with dust cover
⑩ Coil spring
⑪ Shock absorber
⑫ Suspension member
⑬ Rear upper link
⑭ Front upper link
⑮ Lateral link
⑯ Lower arm
⑰ Protector
⑱ Axle housing
⑲ Drive shaft
⑳ Connecting rod
㉑ Final drive
㉒ Stabilizer bar
㉓ Bushing
㉔ Member stay
㉕ Insulator
㉖ Adjusting cap
㉗ Dynamic damper assembly

Removal and Installation

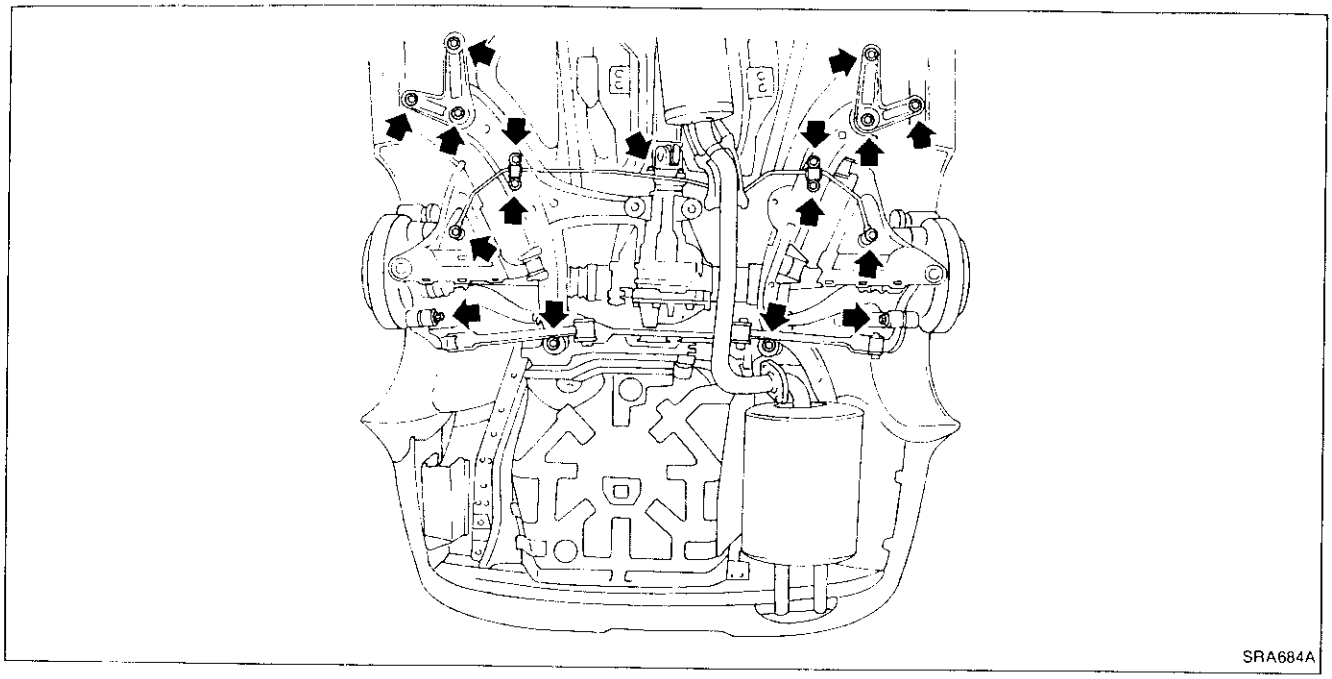

CAUTION:
Before removing the rear suspension assembly, disconnect the ABS sensor from the assembly. Then move it away from the rear suspension assembly. Failure to do so may result in damages to the sensor wires, making the sensor inoperative.

1. Remove exhaust tube.
2. Disconnect propeller shaft rear end.
3. Disconnect hand brake wire front end.

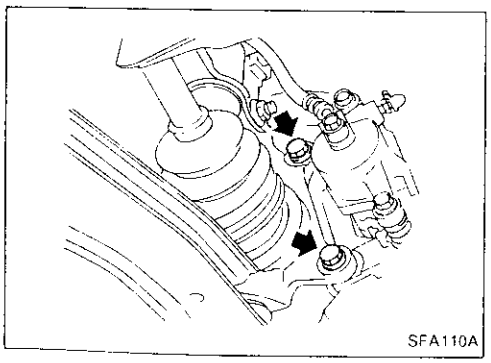

4. Remove brake caliper assembly.

Suspend caliper assembly with wire so as not to stretch brake hose.
Be careful not to depress brake pedal, or piston will pop out.

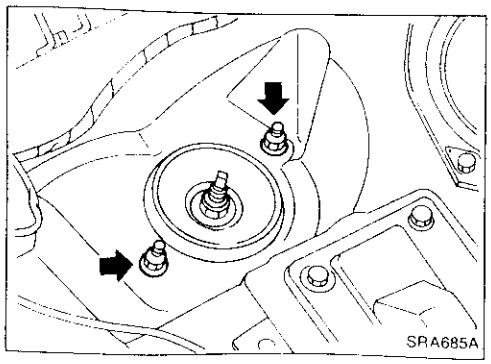

5. Remove rear parcel shelf. Refer to BT section.
6. Remove upper end nuts of shock absorber.

Do not remove piston rod lock nut.

7. Remove suspension member fixing nuts. Then draw out rear axle and rear suspension assembly.

Coil Spring and Shock Absorber

REMOVAL

Remove shock absorber upper and lower fixing nuts.
Do not remove piston rod lock nut on vehicle.

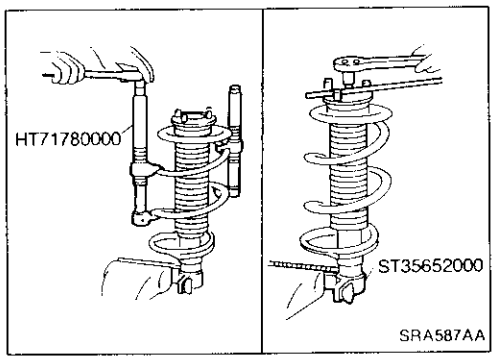

DISASSEMBLY

1. Set shock absorber on vise with attachment, then loosen piston rod lock nut.

Do not remove piston rod lock nut.

2. Compress spring with Tool so that the strut upper spring seat can be turned by hand.

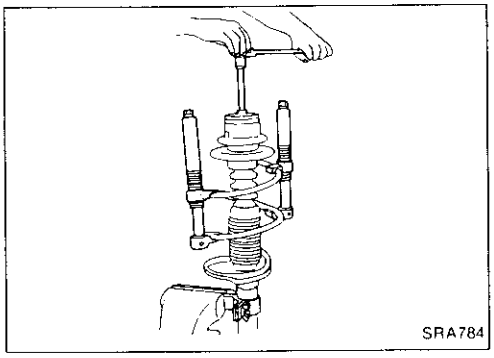

3. Remove piston rod lock nut.

RA

INSPECTION

Shock absorber assembly

- Check for smooth operation through a full stroke, both compression and extension.
- Check for oil leakage on welded or gland packing portion.
- Check piston rod for cracks, deformation or other damage. Replace if necessary.

Upper rubber seat and bushing

Check rubber parts for deterioration or cracks.
Replace if necessary.

Coil spring

Check for cracks, deformation or other damage. Replace if necessary.

Coil Spring and Shock Absorber (Cont'd)

ASSEMBLY

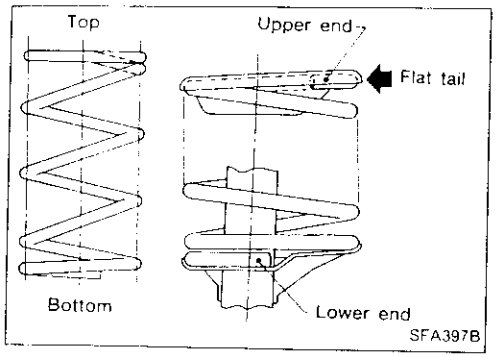

- When installing coil spring, be careful not to reverse top and bottom direction. (Top end is flat.)
- When installing coil spring on strut, it must be positioned as shown in figure at left.

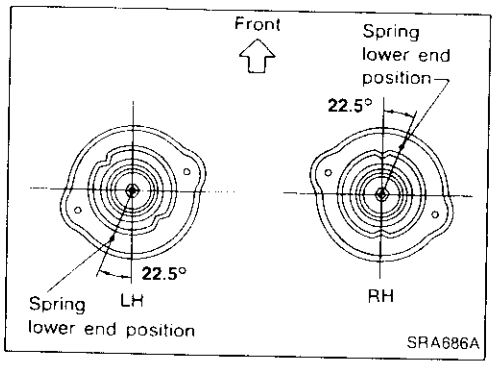

- When installing upper spring seat, make sure that it is positioned as shown.

Multi-link and Lower Ball Joint

REMOVAL AND INSTALLATION

- Refer to "Removal and Installation" of REAR SUSPENSION (RA-18).

Before removing, put matchmarks on adjusting pin.

- When installing, final tightening must be carried out at curb weight with tires on ground.
- After installation, check wheel alignment.
  Refer to "Rear Wheel Alignment" of ON-VEHICLE SERVICE (RA-5).

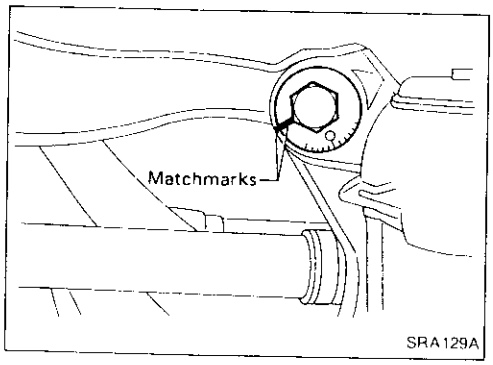

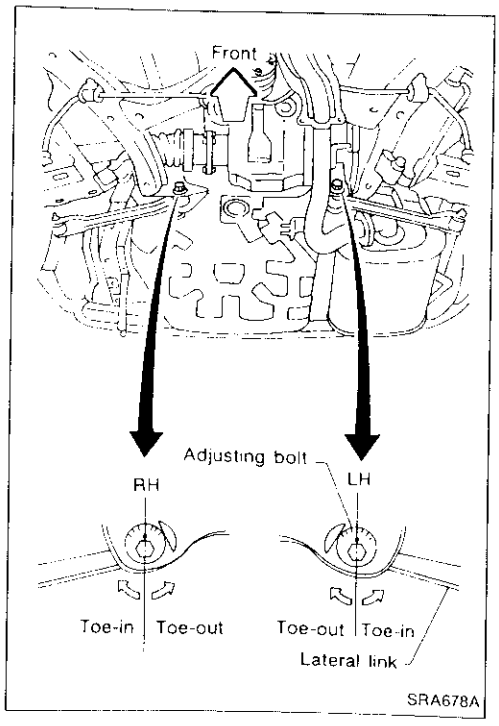

Multi-link and Lower Ball Joint (Cont'd)

INSPECTION

Rear suspension member

Replace suspension member assembly if cracked or deformed or if any part (insulator, for example) is damaged.

Upper and lower links

Replace upper or lower link as required if cracked or deformed or if bushing is damaged.

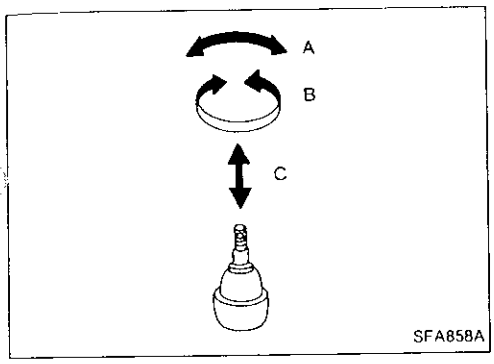

Lower ball joint

- Check ball joint for play. Replace transverse link assembly if any of the following cases occur. Ball stud is worn, play in axial direction is excessive or joint is hard to swing.

Swing force and turning torque

Before checking, turn ball joint at least 10 revolutions so that ball joint is properly broken in.

Swing force "A":
(measuring point: cotter pin hole of ball stud)
7.8 - 54.9 N (0.8 - 5.6 kg, 1.8 - 12.3 lb)
Turning torque "B":
0.5 - 3.4 N·m (5 - 35 kg-cm, 4.3 - 30.4 in-lb)
Vertical end play "C":
0 mm (0 in)

RA

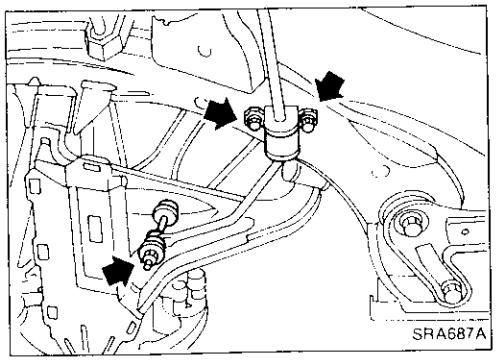

Stabilizer Bar

REMOVAL

- Remove connecting rod and clamp.

INSPECTION

- Check stabilizer bar for deformation or cracks. Replace if necessary.
- Check rubber bushings for deterioration or cracks. Replace if necessary.

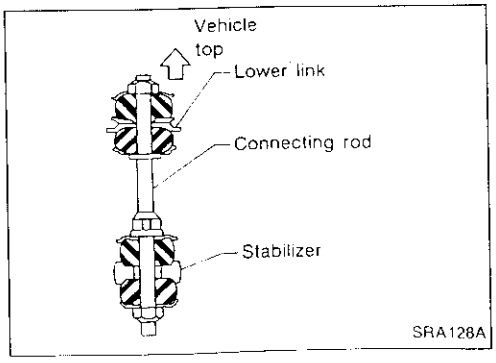

INSTALLATION

When installing connecting rod, make sure direction is correct (as shown at left).

General Specifications

COIL SPRING

Unit: mm (in)

Applied model	All
Wire diameter	11.5 (0.453)
Coil outer diameter	
Large diameter	123.5 - 126.5 (4.86 - 4.98)
Small diameter	112.3 - 115.3 (4.42 - 4.54)
Free length	350 (13.78)
Identification color	Red x 1

SHOCK ABSORBER

Applied model	All
Piston rod diameter mm (in)	12.5 (0.492)

DRIVE SHAFT

Joint type	
Final drive side	TS82F
Wheel side	TS82C
Grease name	
Final drive side	Nissan genuine grease or equivalent
Wheel side	Nissan genuine grease or equivalent
Specified amount of grease g (oz)	
Final drive side	155 - 165 (5.47 - 5.82)
Wheel side	135 - 145 (4.76 - 5.11)
Boot length mm (in)	
Final drive side (L_1)	95 - 97 (3.74 - 3.82)
Wheel side (L_2)	

Final drive side

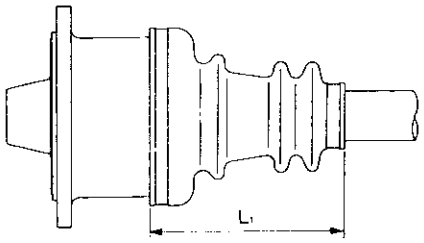

SRA133A

Wheel side

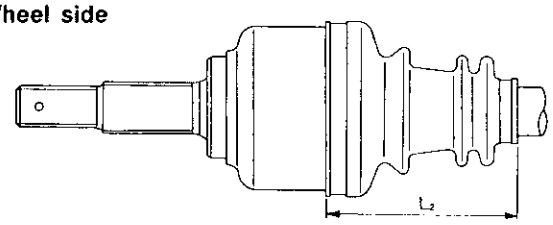

SRA543A

REAR STABILIZER BAR

Model	LHD	RHD
Stabilizer diameter mm (in)	17.3 (0.681)	18.0 (0.709)
Identification color	Light green	Orange

Inspection and Adjustment

WHEEL ALIGNMENT (Unladen*1)

Applied model		Australia	Except Australia
Camber	degree	−1°40′ to −0°40′	−1°35′ to −0°35′
Toe-in			
A − B	mm (in)	0 - 5.0 (0 - 0.197)	
Total angle 2θ	degree	0′ - 28′	

*1. Fuel, radiator coolant and engine oil full.
Spare tire, jack, hand tools and mats in designated positions

WHEEL BEARING

Wheel bearing axial end play	mm (in)	0.05 (0.0020) or less
Wheel bearing lock nut		
Tightening torque	N·m (kg-m, ft-lb)	206 - 275 (21 - 28, 152 - 203)

WHEEL RUNOUT (Radial and lateral)

Wheel type		Radial runout	Lateral runout
Aluminum wheel	mm (in)	0.3 (0.012) or less	
Steel wheel	mm (in)	0.7 (0.028) or less	1.0 (0.039) or less

LOWER BALL JOINT

Swing force (Measuring point: cotter pin hole of ball stud)	N (kg, lb)	7.8 - 54.9 (0.8 - 5.6, 1.8 - 12.3)
Turning torque	N·m (kg-cm, in-lb)	0.5 - 3.4 (5 - 35, 4.3 - 30.4)
Vertical end play	mm (in)	0 (0)

RA

BRAKE SYSTEM

SECTION BR

CONTENTS

PRECAUTIONS AND PREPARATION 2
Precautions 2
Commercial Service Tools 2
BRAKE HYDRAULIC LINE/CONTROL VALVE 3
Brake Hydraulic Line 3
Proportioning Valve 4
CHECK AND ADJUSTMENT 5
Checking Brake Fluid Level 5
Checking Brake Line 5
Changing Brake Fluid 5
Bleeding Brake System 5
BRAKE PEDAL AND BRACKET 7
Removal and Installation 7
Inspection 7
Adjustment 7
MASTER CYLINDER 8
Removal 8
Disassembly 8
Inspection 9
Assembly 9
Installation 9
BRAKE BOOSTER/VACUUM HOSE 10
Brake Booster 10
Vacuum Hose 11
FRONT DISC BRAKE (OPF25V) 12
Pad Replacement 12
Removal and Installation 13
Disassembly 13
Inspection 14
Assembly 15
Inspection (On-vehicle) 15
REAR DISC BRAKE 16
Pad Replacement 16
Removal 18
Disassembly 18
Inspection — Caliper 19
Inspection — Rotor 20
Assembly 20
Installation 21
PARKING BRAKE CONTROL 22
Removal and Installation 22
Inspection 23
Adjustment 23
ANTI-LOCK BRAKE SYSTEM 24
Purpose 24
Operation 24
ABS Hydraulic Circuit 24
System Components 25
System Description 25
Removal and Installation 27
Wiring Diagram — ABS — 29
TROUBLE DIAGNOSES 39
Contents 39
Component Parts and Harness Connector Location 43
SERVICE DATA AND SPECIFICATIONS (SDS) 66
General Specifications 66
Inspection and Adjustment 66

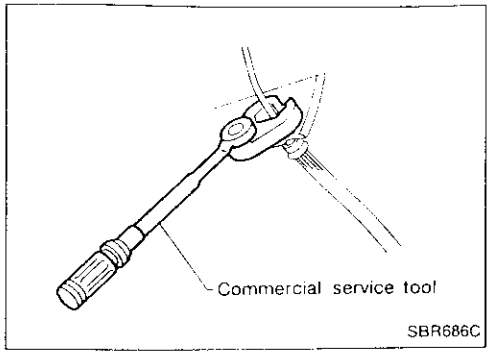

Precautions

- **Recommended brake fluid.**
  For Europe: DOT3 or DOT4
  Except for Europe: DOT3
  For Europe, never mix different type brake fluids (DOT3 and DOT4).
- **Never reuse drained brake fluid.**
- **Be careful not to splash brake fluid on painted areas.**
- **To clean or wash all parts of master cylinder, disc brake caliper and wheel cylinder, use clean brake fluid.**
- **Never use mineral oils such as gasoline or kerosene. They will ruin rubber parts of the hydraulic system.**
- **Use flare nut wrench when removing and installing brake tube.**
- **Always torque brake lines when installing.**

WARNING:

- **Clean brake pads and shoes with a waste cloth, then wipe with a dust collector.**

Commercial Service Tools

Tool name	Description	
① Flare nut crows foot ② Torque wrench	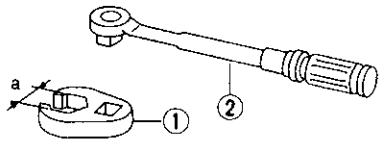 NT360	Removing and installing each brake piping **a: 10 mm (0.39 in)**
Brake fluid pressure gauge	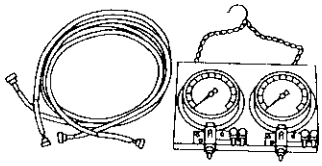 NT151	Measuring brake fluid pressure

Brake Hydraulic Line

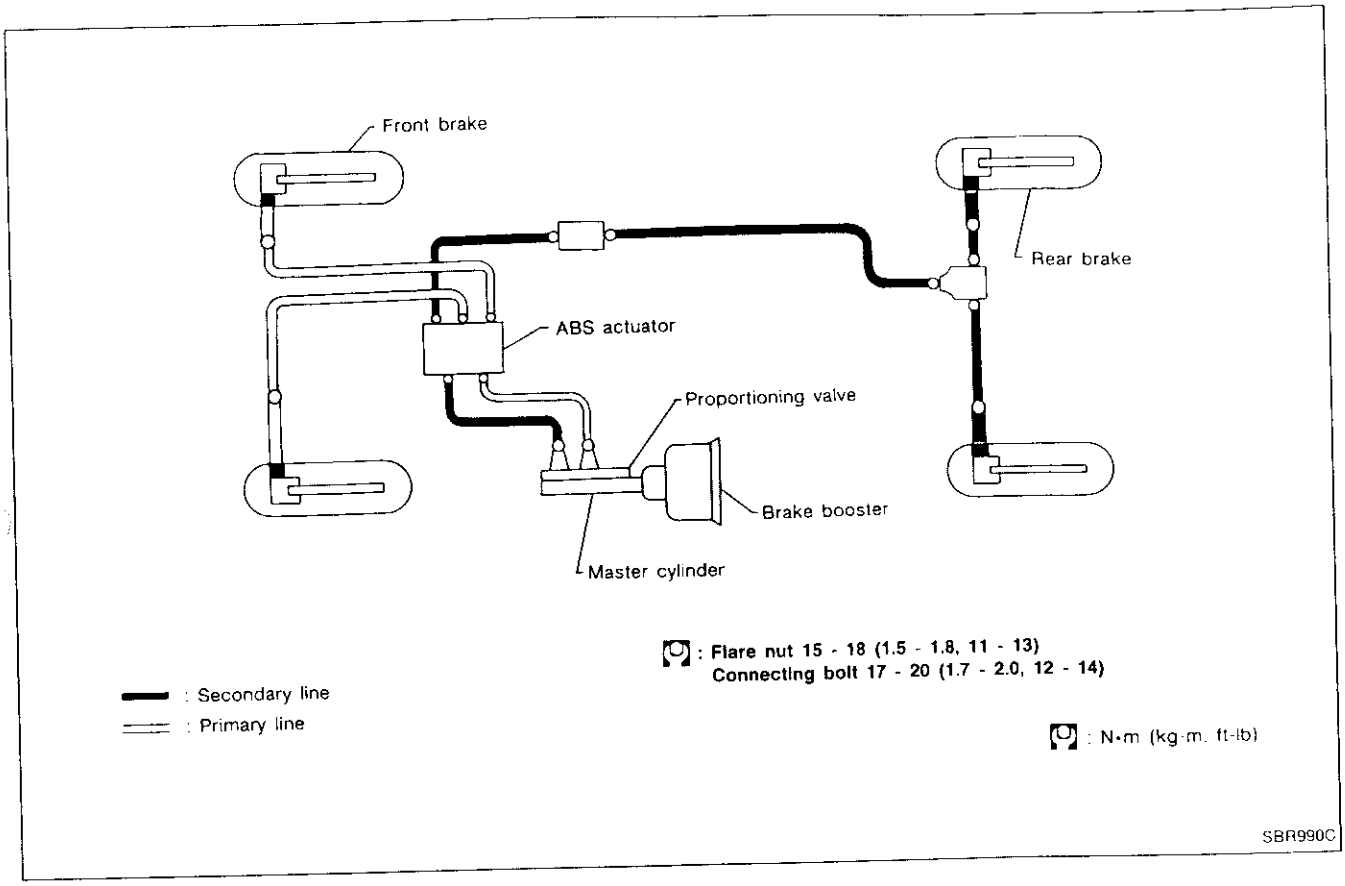

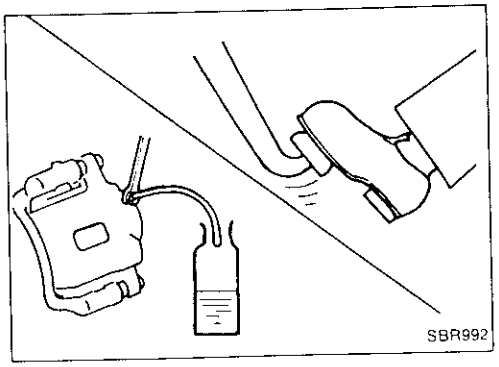

REMOVAL

CAUTION:

- **Be careful not to splash brake fluid on painted areas; it may cause paint damage. If brake fluid is splashed on painted areas, wash it away with water immediately.**
- **All hoses must be free from excessive bending, twisting and pulling.**

1. Connect vinyl tube to air bleeder valve.
2. Drain brake fluid from each air bleeder valve by depressing brake pedal.
3. Remove flare nut connecting brake tube and hose, then withdraw lock spring.
4. Cover openings to prevent entrance of dirt whenever disconnecting brake line.

INSPECTION

Check brake lines (tubes and hoses) for cracks, deterioration or other damage. Replace any damaged parts.

Brake Hydraulic Line (Cont'd)

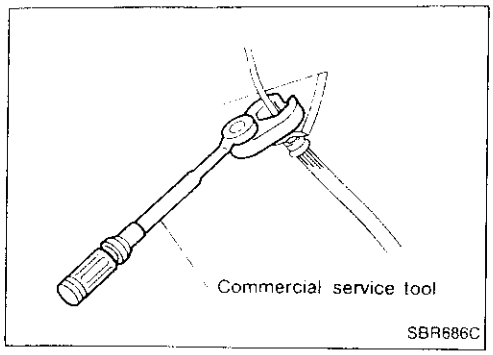

INSTALLATION

CAUTION:

- **Refill with new brake fluid.**
  For Europe: DOT3 or DOT4
  Except for Europe: DOT3
  For Europe, never mix different type brake fluids (DOT3 and DOT4).
- **Never reuse drained brake fluid.**

1. Tighten all flare nuts and connecting bolts.
   Specification:
   Flare nut
   15 - 18 N·m (1.5 - 1.8 kg-m, 11 - 13 ft-lb)
   Connecting bolt
   17 - 20 N·m (1.7 - 2.0 kg-m, 12 - 14 ft-lb)
2. Refill until new brake fluid comes out of each air bleeder valve.
3. Bleed air. Refer to "Bleeding Brake System" (BR-5).

Proportioning Valve

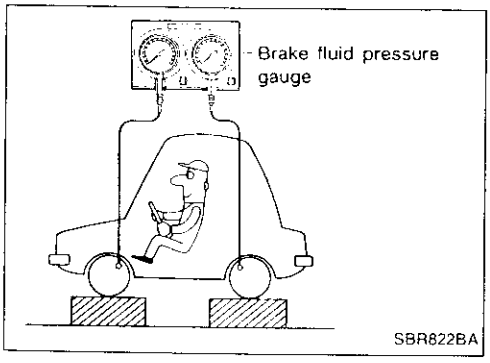

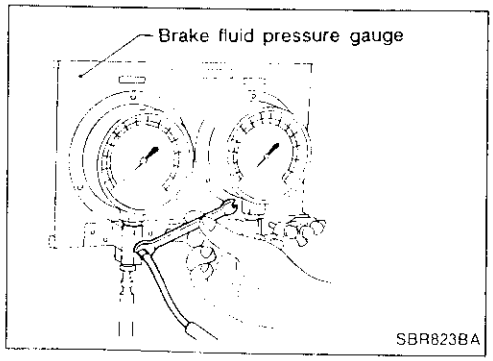

INSPECTION

CAUTION:

- **Carefully monitor brake fluid level at master cylinder.**
- **Use new brake fluid.**
  For Europe: DOT3 or DT4
  Except for Europe: DOT3
  For Europe, never mix different type brake fluids (DOT3 and DOT4).
- **Be careful not to splash brake fluid on painted areas; it may cause paint damage. If brake fluid is splashed on paint areas, wash it away with water immediately.**

1. Connect Tool to air bleeders of front and rear brakes on either LH and RH side.
2. Bleed air from the Tool.
3. Check fluid pressure by depressing brake pedal.

Unit: kPa (bar, kg/cm^2, psi)

Applied pressure (Front brake)	7,355 (73.6, 75, 1,067)
Output pressure (Rear brake)	5,100 - 5,492 (51.0 - 54.9, 52 - 56, 739 - 796)

4. Bleed air after disconnecting the Tool. Refer to "Bleeding Brake System" (BR-5).

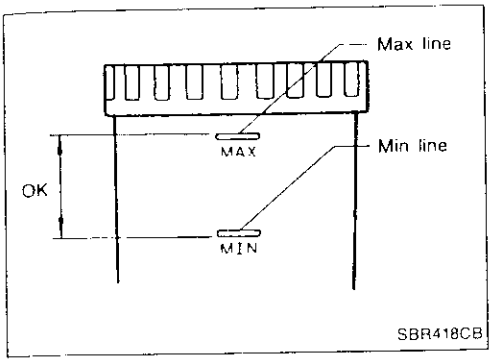

Checking Brake Fluid Level

- Check fluid level in reservoir tank. It should be between Max and Min lines on reservoir tank.
- If fluid level is extremely low, check brake system for leaks.
- If brake warning lamp comes on, check brake fluid level switch and parking brake switch.

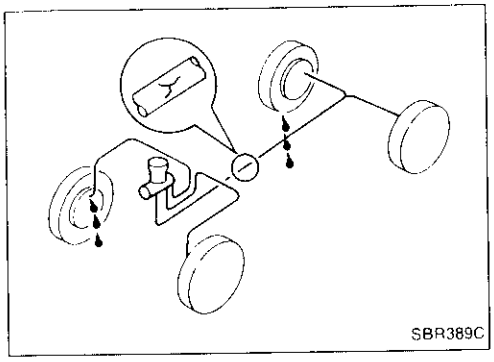

Checking Brake Line

CAUTION:

If leakage occurs around joints, retighten or, if necessary, replace damaged parts.

1. Check brake lines (tubes and hoses) for cracks, deterioration or other damage. Replace any damaged parts.
2. Check for oil leakage by fully depressing brake pedal while engine is running.

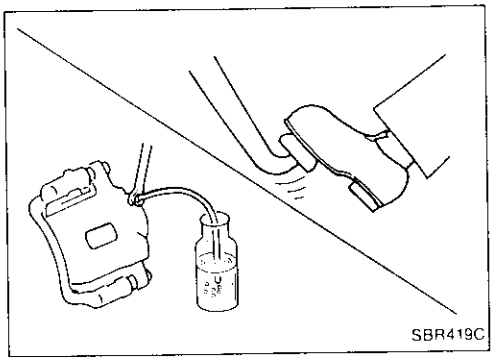

Changing Brake Fluid

CAUTION:

- **Refill with new brake fluid.**
  For Europe: DOT3 or DOT4/Except for Europe: DOT3
  For Europe, never mix different type brake fluids (DOT3 and DOT4).
- **Always keep fluid level higher than minimum line on reservoir tank.**
- **Never reuse drained brake fluid.**
- **Be careful not to splash brake fluid on painted areas; it may cause paint damage. If brake fluid is splashed on painted areas, wash it away with water immediately.**

1. Clean inside of reservoir tank, and refill with new brake fluid.
2. Connect a vinyl tube to each air bleeder valve.
3. Drain brake fluid from each air bleeder valve by depressing brake pedal.
4. Refill until brake fluid comes out of each air bleeder valve. Use same procedure as in bleeding hydraulic system to refill brake fluid. Refer to "Bleeding Brake System" (BR-5).

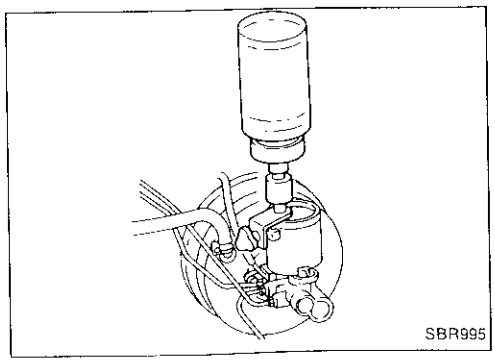

Bleeding Brake System

CAUTION:

- **Carefully monitor brake fluid level at master cylinder during bleeding operation.**
- **Fill reservoir with new brake fluid.**
  For Europe: DOT3 or DOT4/Except for Europe: DOT3
  For Europe, never mix different type brake fluids (DOT3 and DOT4).
  Make sure it is full at all times while bleeding air out of system.

Bleeding Brake System (Cont'd)

- **Place a container under master cylinder to avoid spillage of brake fluid.**
- **Turn ignition switch OFF and disconnect ABS actuator connectors or battery ground cable.**

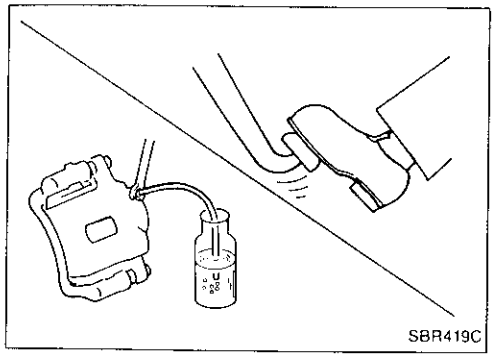

- Bleed air in the following order.
  Right rear brake → Left rear brake →
  Right front brake → Left front brake

1. Connect a transparent vinyl tube to air bleeder valve.
2. Fully depress brake pedal several times.
3. With brake pedal depressed, open air bleeder valve to release air.
4. Close air bleeder valve.
5. Release brake pedal slowly.
6. Repeat steps 2. through 5. until clear brake fluid comes out of air bleeder valve.

Removal and Installation

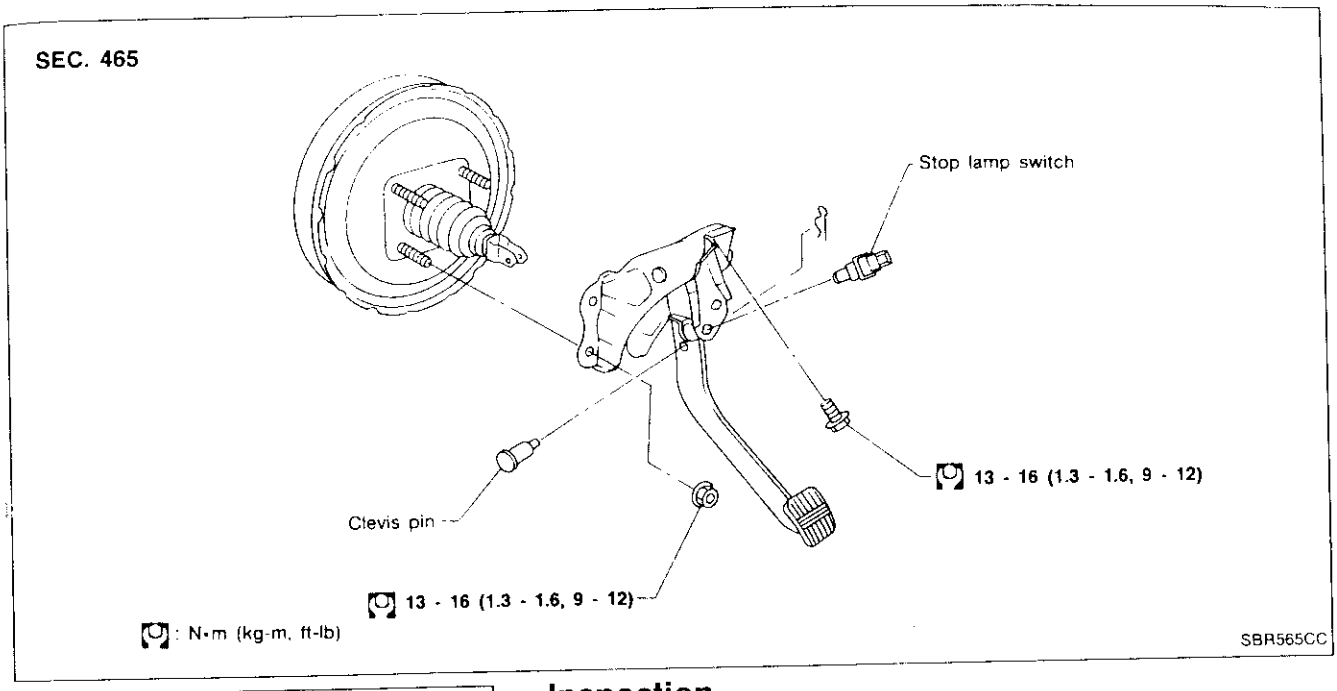

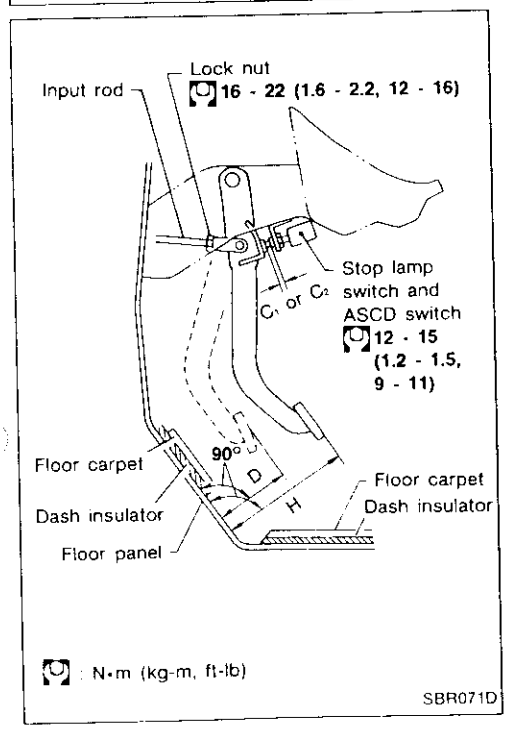

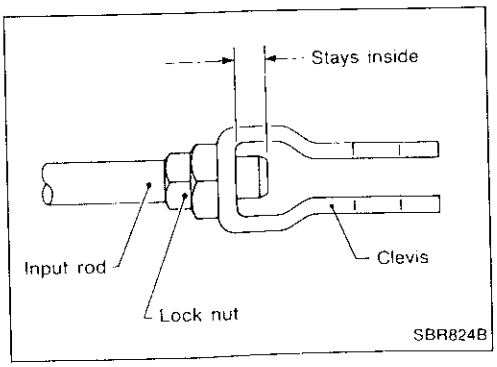

Inspection

Check brake pedal for following items.

- Brake pedal bend
- Clevis pin deformation
- Crack of any welded portion

Adjustment

Check brake pedal free height from dash reinforcement panel. Adjust if necessary.

H: **Free height**
Refer to SDS (BR-66).

D: **Depressed height**
Refer to SDS. (BR-66).
Under force of 490 N (50 kg, 110 lb) with engine running

C_1, C_2: **Clearance between pedal stopper and threaded end of stop lamp switch and ASCD switch**
0.3 - 1.0 mm (0.012 - 0.039 in)

1. Loosen lock nut and adjust pedal free height by turning brake booster input rod. Then tighten lock nut.
2. Check pedal free play.

Make sure that stop lamps go off when pedal is released.

3. Check brake pedal's depressed height while engine is running. If lower than specification, check for leaks, air in system, or damage to components (master cylinder, wheel cylinder, etc.). Then make necessary repair.

Disassembly (Cont'd)

2. Remove valve stopper while piston is pushed into cylinder.
3. Remove piston assemblies.

If it is difficult to remove secondary piston assembly, gradually apply compressed air through fluid outlet.

4. Draw out reservoir tank.

Inspection

Check for the following items.

Replace any part if damaged.

Master cylinder:

- Pin holes or scratches on inner wall.

Piston:

- Deformation of or scratches on piston cups.

SBR231C

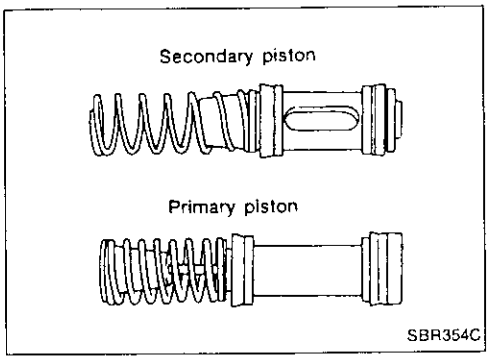

Assembly

1. Insert secondary piston assembly. Then insert primary piston assembly.

- **Pay attention to alignment of secondary piston slit with valve stopper mounting hole of cylinder body.**

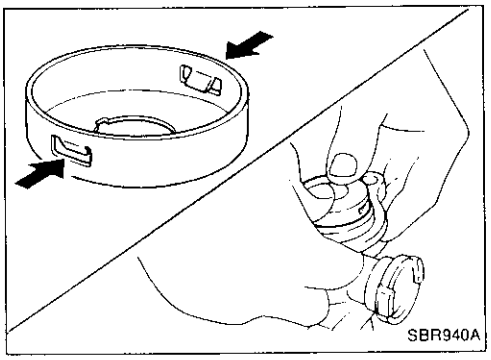

2. Install stopper cap.

Before installing stopper cap, ensure that claws are bent inward.

3. Push reservoir tank seals.
4. Push reservoir tank into master cylinder.

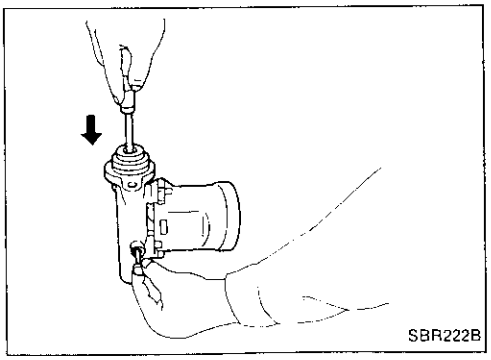

5. Install valve stopper while piston is pushed into cylinder.

Installation

CAUTION:

- **Refill with new brake fluid.**
  For Europe: DOT3 or DOT4/Except for Europe: DOT3
  For Europe, never mix different type brake fluids (DOT3 and DOT4).
- **Never reuse drained brake fluid.**

1. Place master cylinder onto brake booster and secure mounting nuts lightly.
2. Torque mounting nuts.
   12 - 15 N·m (1.2 - 1.5 kg-m, 9 - 11 ft-lb)
3. Fill up reservoir tank with new brake fluid.
4. Plug all ports on master cylinder with fingers to prevent air suction while releasing brake pedal.
5. Have driver depress brake pedal slowly several times until no air comes out of master cylinder.
6. Fit brake lines to master cylinder.
7. Tighten flare nuts.
   : 15 - 18 N·m (1.5 - 1.8 kg-m, 11 - 13 ft-lb)
8. Bleed air from brake system. Refer to "Bleeding Brake System" (BR-5).

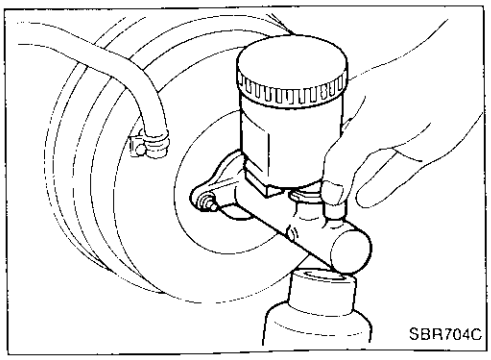

SEC. 460

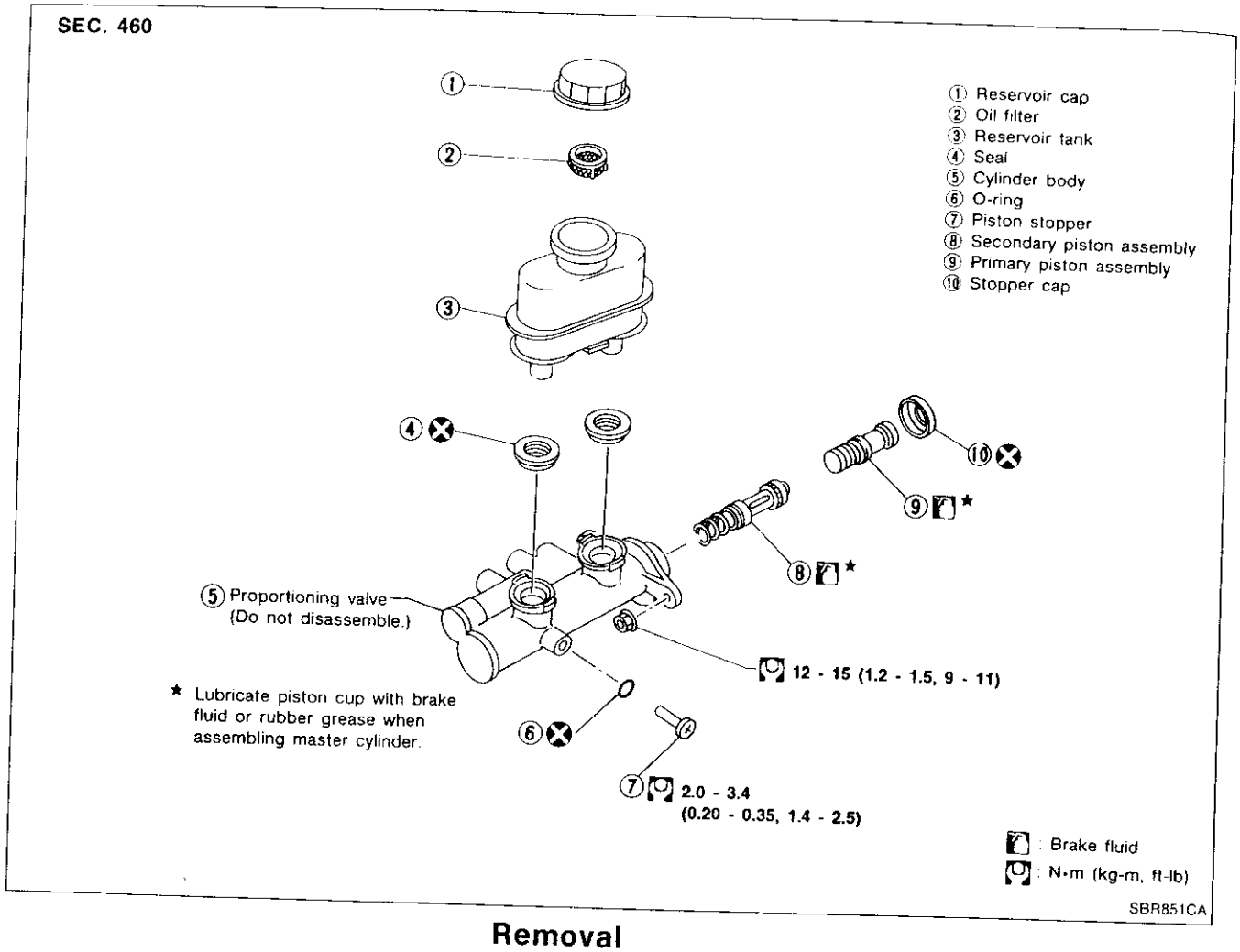

Removal

CAUTION:

Be careful not to splash brake fluid on painted areas; it may cause paint damage. If brake fluid is splashed on painted areas, wash it away with water immediately.

1. Connect a vinyl tube to air bleeder valve.
2. Drain brake fluid from each air bleeder valve, depressing brake pedal to empty fluid from master cylinder.
3. Remove brake pipe flare nuts.
4. Remove master cylinder mounting nuts.

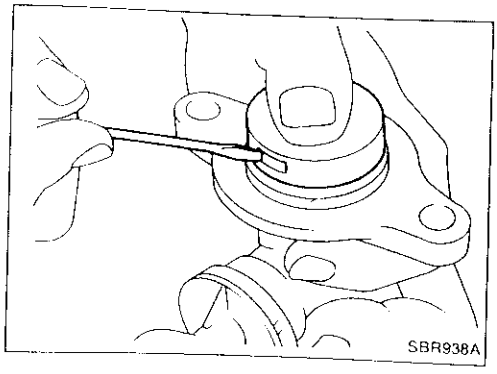

Disassembly

1. Bend claws of stopper cap outward.

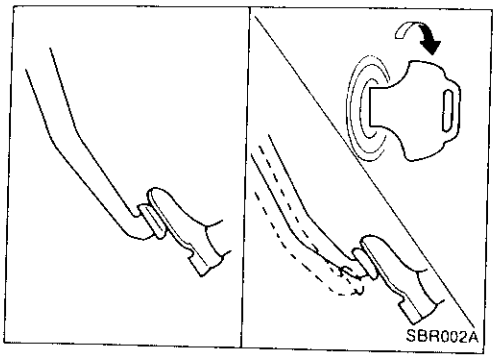

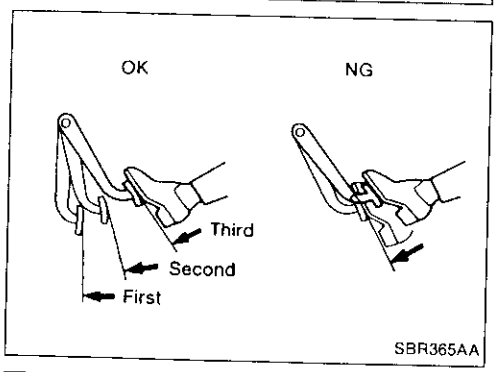

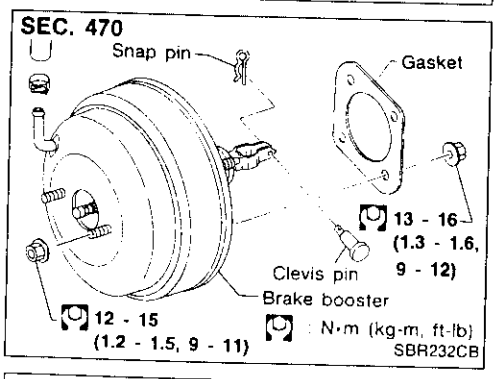

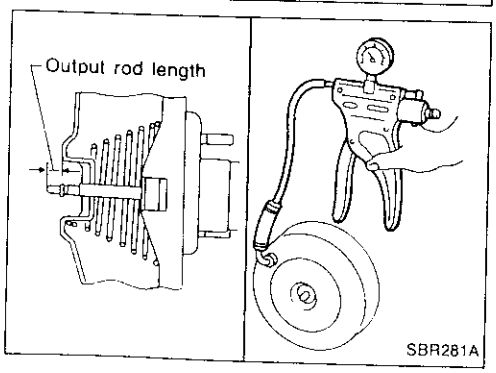

Brake Booster

ON-VEHICLE SERVICE

Operating check

- Stop engine and depress brake pedal several times. Check that pedal stroke does not change.
- Depress brake pedal, then start engine. If pedal goes down slightly, operation is normal.

Airtight check

- Start engine, and stop it after one or two minutes. Depress brake pedal several times slowly. The pedal should go further down the first time, and then it should gradually rise thereafter.
- Depress brake pedal while engine is running, and stop engine with pedal depressed. The pedal stroke should not change after holding pedal down for **30 seconds**.

REMOVAL

CAUTION:

- **Be careful not to splash brake fluid on painted areas; it may cause paint damage. If brake fluid is splashed on painted areas, wash it away with water immediately.**
- **Be careful not to deform or bend brake pipes, during removal of booster.**

INSPECTION

Output rod length check

1. Apply vacuum of −66.7 kPa (−667 mbar, −500 mmHg, −19.69 inHg) to brake booster with a handy vacuum pump.
2. Check output rod length.

   Specified length:

   10.4 mm (0.409 in)

INSTALLATION

CAUTION:

- **Be careful not to deform or bend brake pipes, during installation of booster.**
- **Replace clevis pin if damaged.**
- **Refill with new brake fluid.**
  For Europe: DOT3 or DOT4/Except for Europe: DOT3
  For Europe, never mix different type brake fluids (DOT3 and DOT4).
- **Never reuse drained brake fluid.**
- **Take care not to damage brake booster mounting bolt**

Brake Booster (Cont'd)

thread when installing. Due to the angle of installation, threads can be damaged by the dash panel.

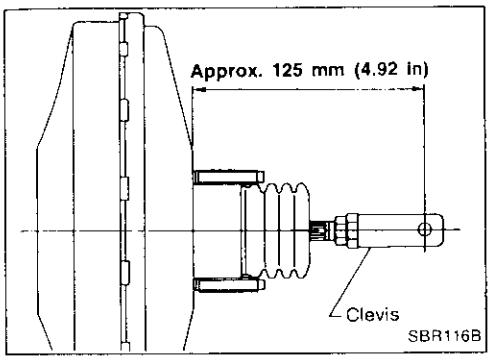

1. Before fitting booster, temporarily adjust clevis to dimension shown.
2. Fit booster, then secure mounting nuts (brake pedal bracket to booster) lightly.
3. Connect brake pedal and booster input rod with clevis pin.
4. Secure mounting nuts.
   Specification: 13 - 16 N·m (1.3 - 1.6 kg-m, 9 - 12 ft-lb)
5. Install master cylinder. Refer to "Installation" in "MASTER CYLINDER" (BR-9).
6. Bleed air. Refer to "Bleeding Brake System" (BR-5).

Vacuum Hose

REMOVAL AND INSTALLATION

CAUTION:

When installing vacuum hoses, pay attention to the following points.

- **Do not apply any oil or lubricants to vacuum hose and check valve.**
- **Insert vacuum tube into vacuum hose as shown.**

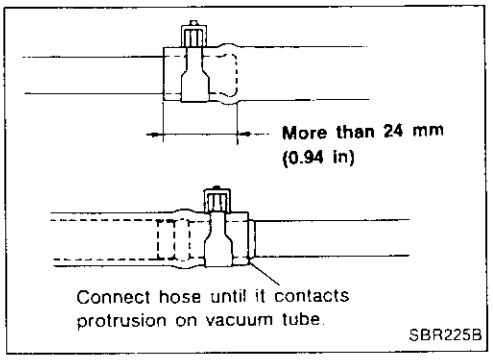

- **Install check valve, paying attention to its direction.**

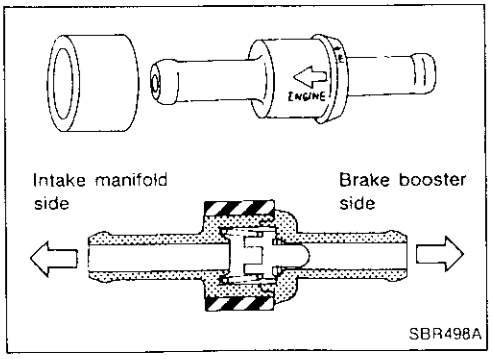

INSPECTION

Hoses and connectors

Check vacuum lines, connections and check valve for airtightness, improper attachment chafing and deterioration.

Check valve

Check vacuum with a vacuum pump.

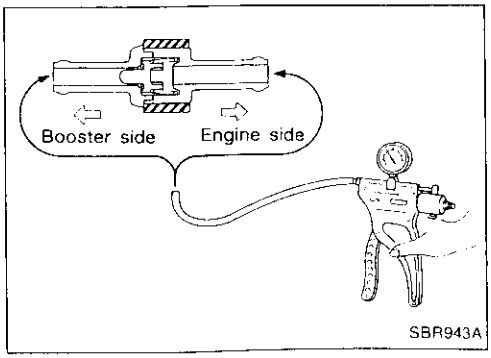

Connect to booster side	Vacuum should exist.
Connect to engine side	Vacuum should not exist.

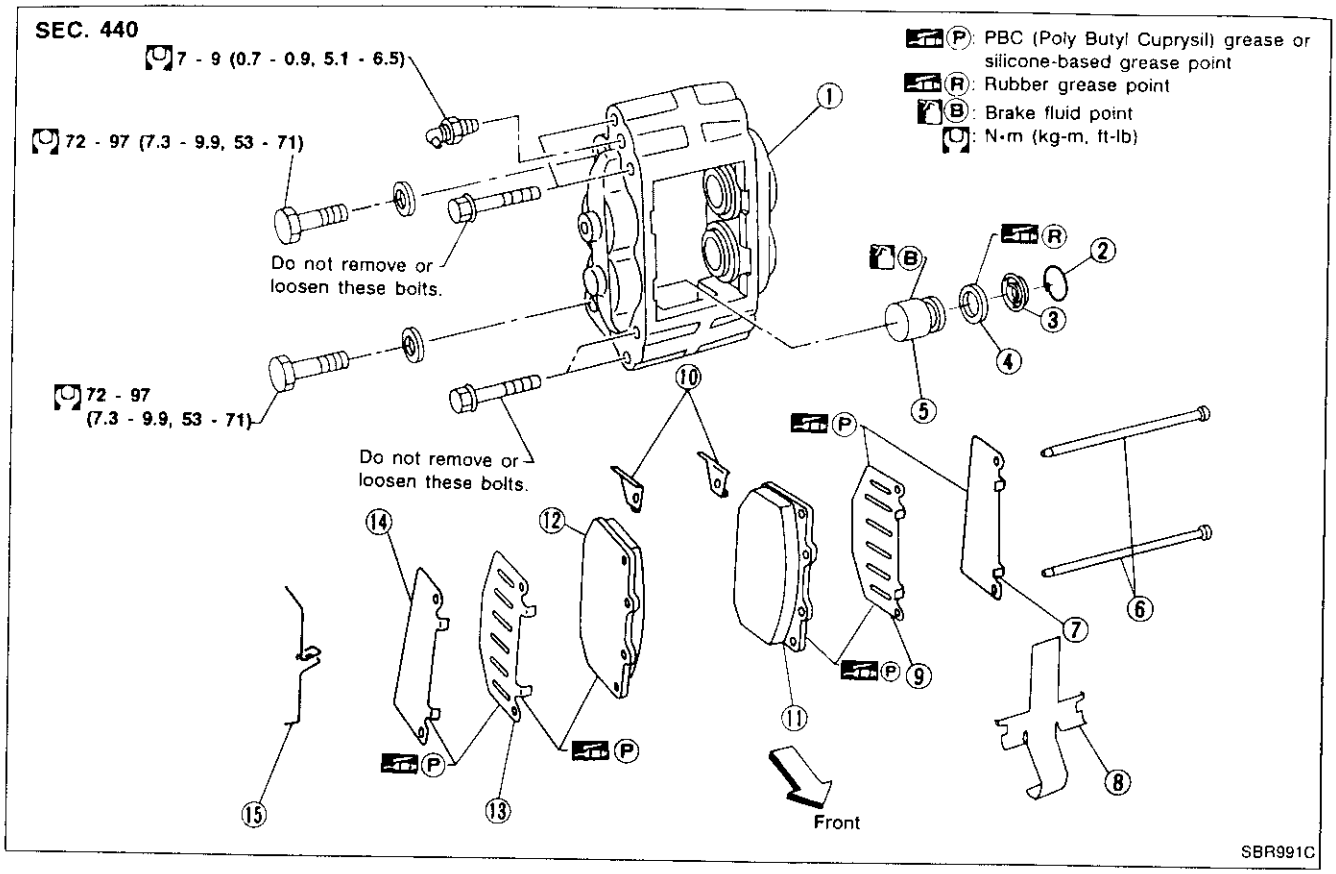

① Caliper
② Retaining ring
③ Dust seal
④ Piston seal
⑤ Piston
⑥ Pad pin
⑦ Outer shim A
⑧ Cross spring
⑨ Outer shim B
⑩ Pad retainer
⑪ Outer pad
⑫ Inner pad
⑬ Inner shim B
⑭ Inner shim A
⑮ Clip

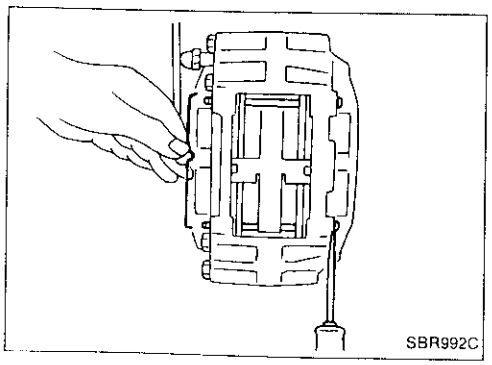

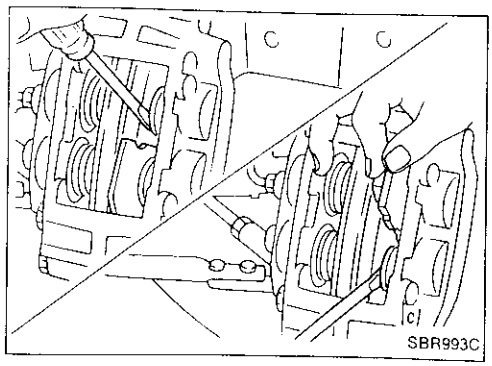

Pad Replacement

CAUTION:

- **When pads are removed, do not depress brake pedal because piston will pop out.**
- **Be careful not to damage dust seal or get oil on rotor. Always replace shims when replacing pads.**

1. Remove clip from pad pin and then remove pad pin.
2. Remove cross spring.
3. Pull out outer pad and insert it temporarily between lower piston and rotor as shown.
4. Push back upper piston with a suitable tool and insert new pad so it contacts upper piston as shown.
5. Pull out old pad.
6. Push back lower piston with a suitable tool.
7. Pull out new pad and reinstall it in the proper position.
8. Repeat step 3 to 7 for inner pad.
9. Install cross spring, pad pin and clip.

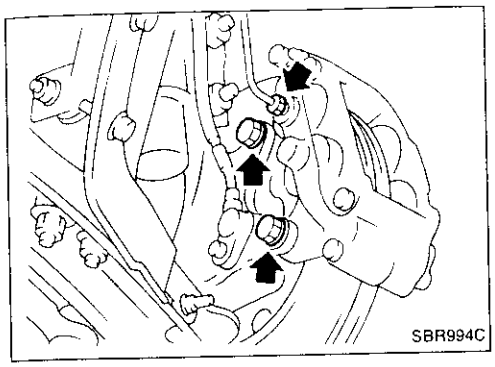

Removal and Installation

1. Disconnect brake tube.
2. Remove brake pad.
3. Remove brake caliper mounting bolts.

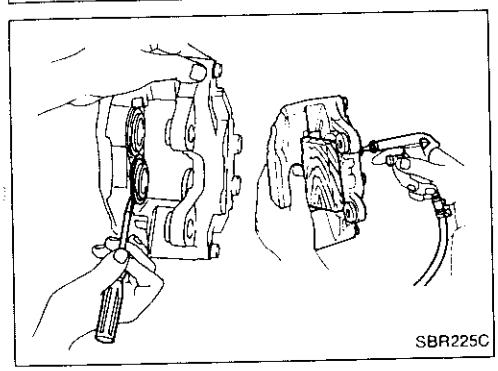

Disassembly

1. Remove retaining ring.
2. Push out piston with dust seal using compressed air.

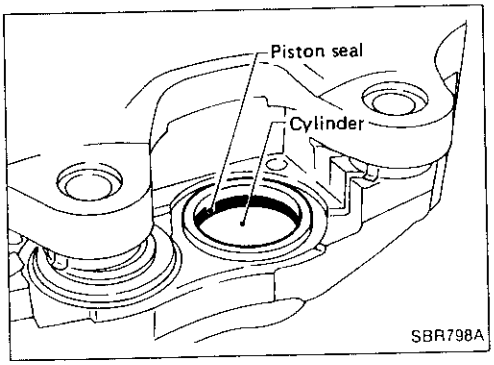

3. Remove piston seal.

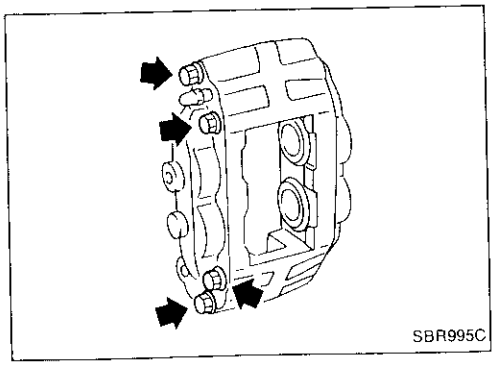

CAUTION:
Be careful not to loosen or remove bolts joining both sides of caliper.
If there is any fluid leakage, replace caliper assembly.

Inspection

CALIPER

- Check dust seals for damage.
- Check calipers for damage, rust or foreign materials.
- Check inside surface of cylinder for scoring, rust, wear, damage or foreign materials. Replace if any such condition exists.
- Eliminate minor damage from rust or foreign materials by polishing surface with fine emery paper.

CAUTION:
Use brake fluid to clean.

PISTON

Check piston for scoring, rust, wear, damage or foreign materials. Replace if any condition exists.

CAUTION:
Piston sliding surface is plated. Do not polish with emery paper even if rust or foreign materials are stuck to sliding surface.

PAD PIN AND CLIPS

Check for wear, cracks deformation, deterioration, rust or other damage. Replace if any such condition exists.

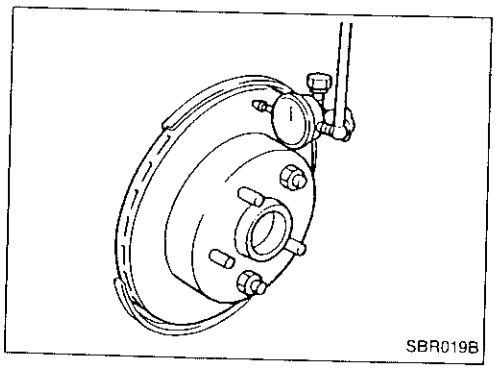
SBR019B

RUNOUT

1. Secure rotor to wheel hub with at least two nuts (M12 x 1.25).
2. Check runout using a dial indicator.

Make sure that wheel bearing axial end play is within the specifications before measuring. Refer to "Front Wheel Bearing" in FA section.

Maximum runout:
0.05 mm (0.0020 in)

3. If the runout is out of specification, find minimum runout position as follows:
   a. Remove nuts and rotor from wheel hub.
   b. Shift the rotor one hole and secure rotor to wheel hub with nuts.
   c. Measure runout.
   d. Repeat steps a. to c. so that minimum runout position can be found.
4. If the runout is still out of specification, turn rotor with on-car brake lathe ("MAD, DL-8700", "AMMCO 700 and 705" or equivalent).

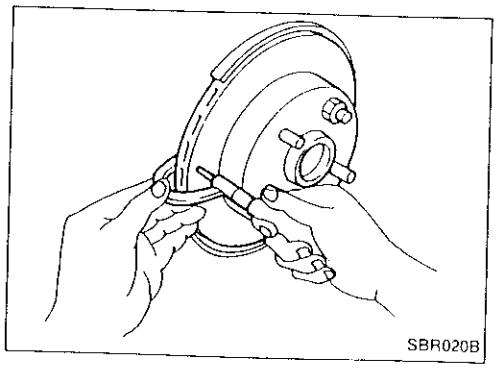
SBR020B

THICKNESS

Thickness variation (At least 8 positions):
Maximum 0.01 mm (0.0004 in)

If thickness variation exceeds the specification, turn rotor with on-car brake lathe.

Rotor repair limit:
28.0 mm (1.102 in)

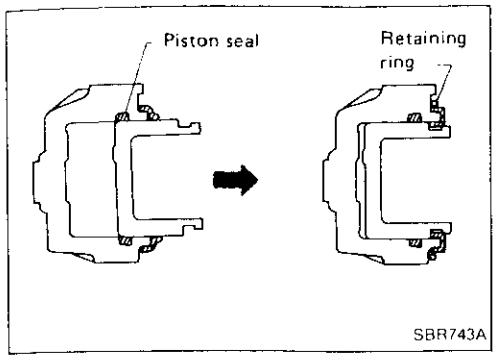

Assembly

1. Insert piston seal into groove on cylinder body.
2. With dust seal fitted to piston, install piston into cylinder body.
3. Secure dust seal properly.
4. Install retaining ring.

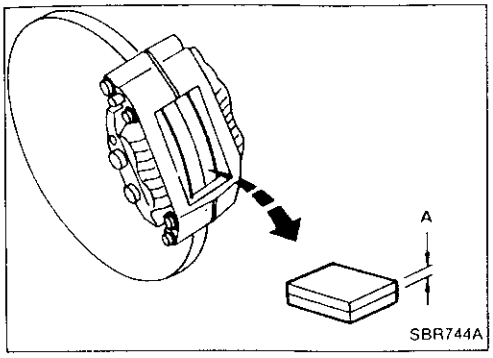

Inspection (On-vehicle)

DISC PAD

- Check pad shims for deformation or damage.
- Check disc pad for wear or damage.

Pad standard thickness (A):
10.0 mm (0.394 in)
Pad wear limit (A):
2.0 mm (0.079 in)

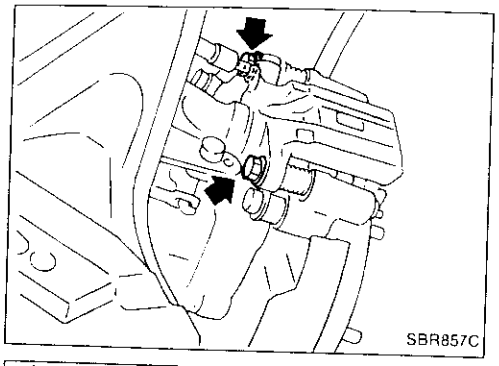

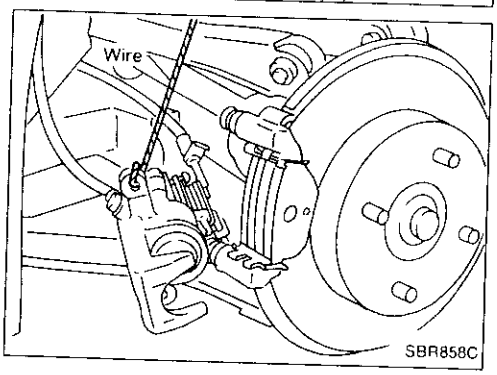

Pad Replacement

WARNING:

Clean brake pads with a vacuum dust collector to minimize the hazard of airborne particles or other materials.

CAUTION:

- **When cylinder body is open, do not depress brake pedal because piston will pop out.**
- **Be careful not to damage piston boot or get oil on rotor. Always replace shims in replacing pads.**
- **If shims are rusted or show peeling of rubber coat, replace them with new shims.**
- **It is not necessary to remove connecting bolt except for disassembly or replacement of caliper assembly. In this case, suspend cylinder body with wire so as not to stretch brake hose.**

1. Remove master cylinder reservoir cap.
2. Release parking brake.
3. Remove brake cable mounting bolts from the rear suspension.
4. Remove pin bolts.
5. Remove cylinder body. Then remove pad retainers, and inner and outer shims.

   Standard pad thickness:
   9.5 mm (0.374 in)
   Pad wear limit:
   2.0 mm (0.079 in)

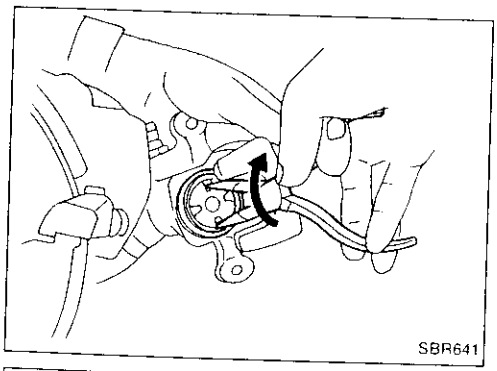

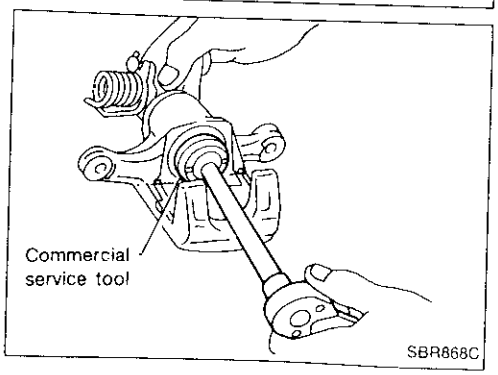

6. When installing new pads, push piston into cylinder body by gently turning piston clockwise, as shown.

Carefully monitor brake fluid level because brake fluid will return to reservoir when pushing back piston.

SEC. 441

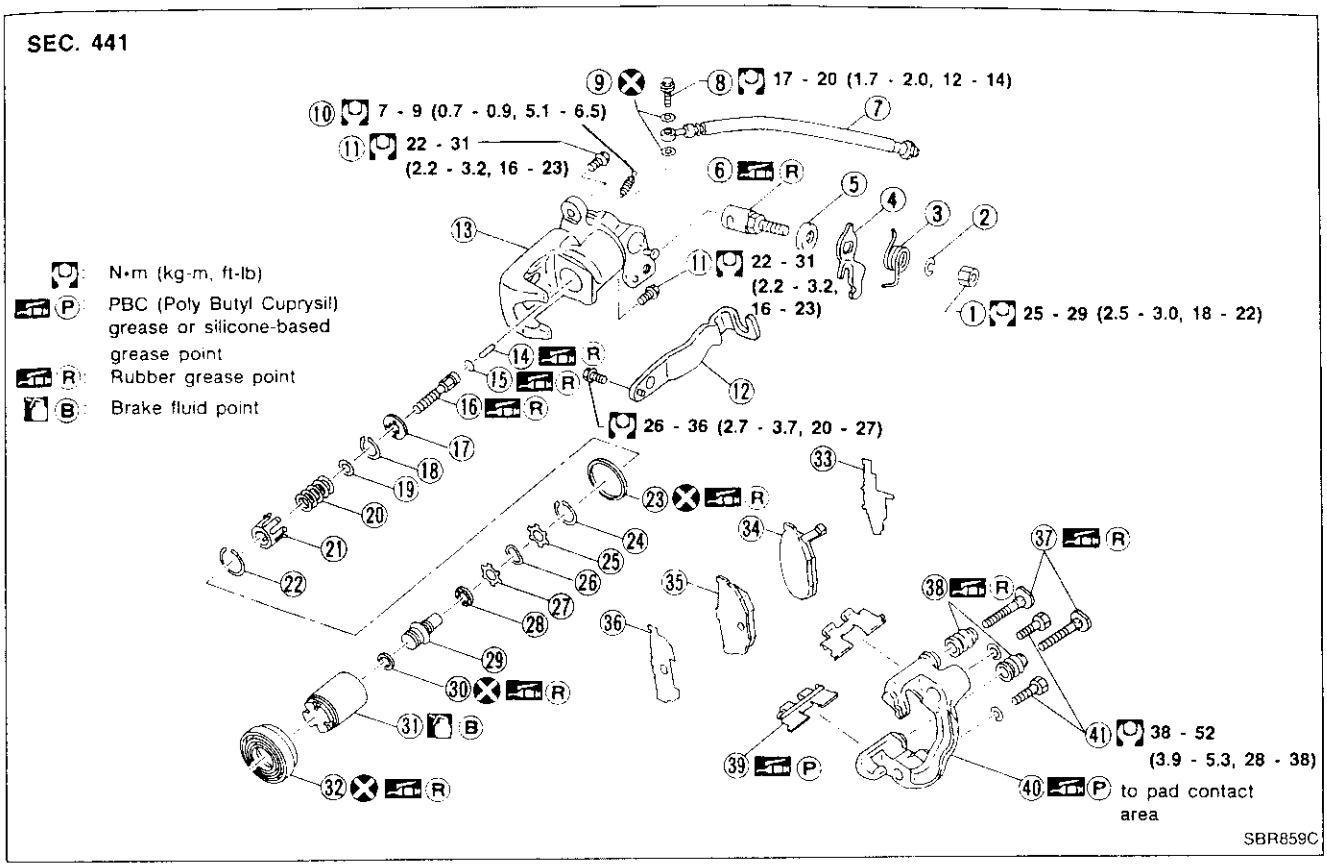

SBR859C

① Nut
② Washer
③ Return spring
④ Parking brake lever
⑤ Cam boot
⑥ Cam
⑦ Brake hose
⑧ Connecting bolt
⑨ Copper washer
⑩ Bleed screw
⑪ Pin bolt
⑫ Cable mounting bracket
⑬ Cylinder
⑭ Strut
⑮ O-ring
⑯ Push rod
⑰ Key plate
⑱ Ring C
⑲ Seat
⑳ Spring
㉑ Spring cover
㉒ Ring B
㉓ Piston seal
㉔ Ring A
㉕ Spacer
㉖ Wave washer
㉗ Spacer
㉘ Ball bearing
㉙ Adjusting nut
㉚ Cup
㉛ Piston
㉜ Dust seal
㉝ Inner shim
㉞ Inner pad
㉟ Outer pad
㊱ Outer shim
㊲ Pin
㊳ Pin boot
㊴ Pad retainer
㊵ Torque member
㊶ Torque member fixing bolt

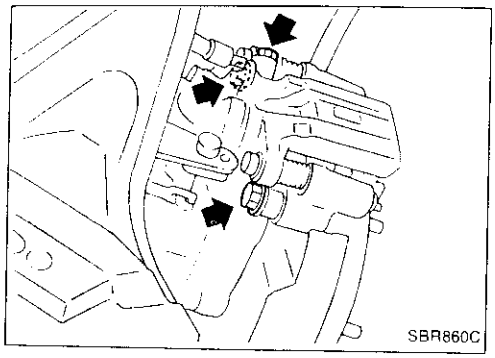
SBR860C

Removal

WARNING:
Clean brake pads with a vacuum dust collector to minimize the hazard of airborne particles or other materials.

1. Remove brake cable mounting bracket bolt and lock spring.
2. Remove torque member fixing bolts and connecting bolt.

It is not necessary to remove connecting bolt except for disassembly or replacement of caliper assembly. In this case, suspend caliper assembly with wire so as not to stretch brake hose.

Disassembly

1. Remove piston by turning it counterclockwise with suitable commercial service tool or long nose pliers.

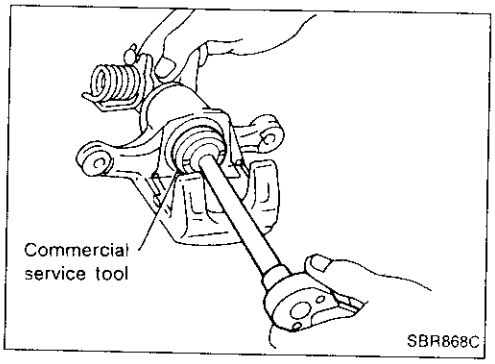

SBR868C

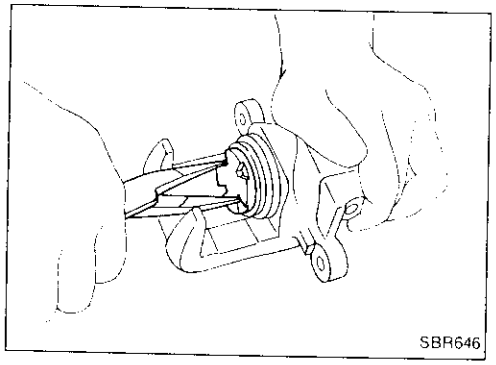
SBR646

2. Pry off ring A from piston with suitable pliers and remove adjusting nut.

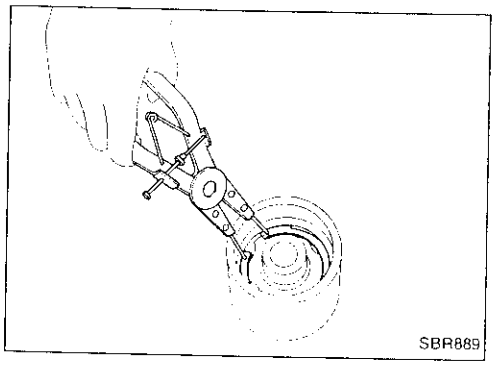
SBR889

3. Disassemble cylinder body.
   a. Pry off ring B with suitable pliers, then remove spring cover, spring and seat.
   b. Pry off ring C, then remove key plate, push rod and strut.

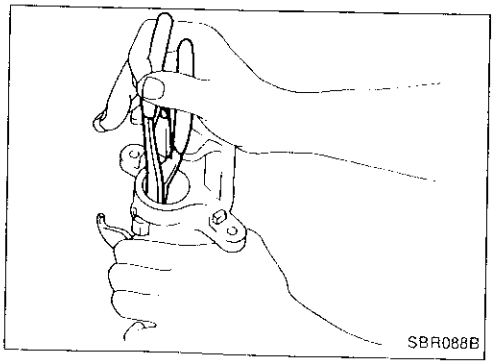
SBR088B

Disassembly (Cont'd)

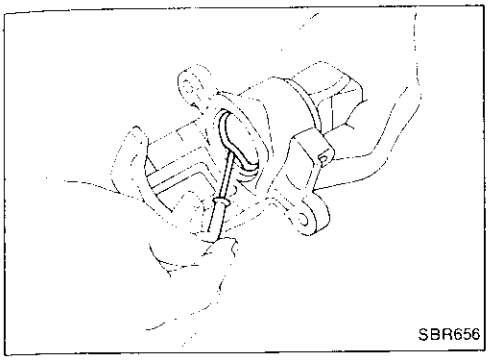
SBR656

c. Remove piston seal.
Be careful not to damage cylinder body.

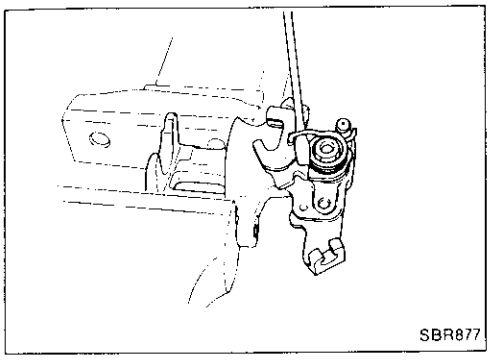
SBR877

4. Remove return spring, nut and parking brake lever.

Inspection — Caliper

CAUTION:
Use brake fluid to clean cylinder. Never use mineral oil.

CYLINDER BODY

- Check inside surface of cylinder for score, rust, wear, damage or presence of foreign materials. If any of the above conditions are observed, replace cylinder body.
- Minor damage from rust or foreign materials may be eliminated by polishing surface with a fine emery paper. Replace cylinder body if necessary.

TORQUE MEMBER

Check for wear, cracks or other damage. Replace if necessary.

PISTON

CAUTION:
Piston sliding surface is plated. Do not polish with emery paper even if rust or foreign matter is stuck to sliding surface.
Check piston for score, rust, wear, damage or presence of foreign materials.
Replace if any of the above conditions are observed.

PIN AND PIN BOOT

Check for wear, cracks or other damage.
Replace if any of the above conditions are observed.

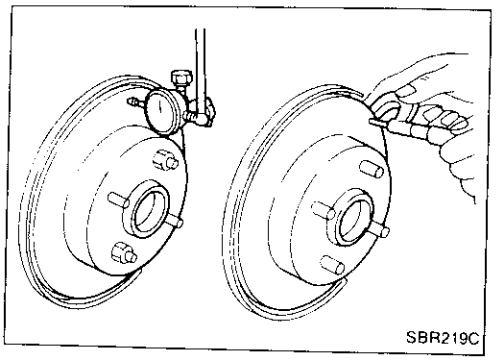
SBR219C

Inspection — Rotor

RUBBING SURFACE

Check rotor for roughness, cracks or chips.

RUNOUT

1. Secure rotor to wheel hub with two nuts (M12 x 1.25).
2. Check runout using a dial indicator.

Make sure that axial end play is within the specifications before measuring. Refer to "Rear Wheel Bearing" in RA section.

3. Change relative positions of rotor and wheel hub so that runout is minimized.

Maximum runout:
0.07 mm (0.0028 in)

THICKNESS

Rotor repair limit:
Standard thickness
9 mm (0.35 in)
Minimum thickness
8 mm (0.31 in)
Thickness variation (At least 8 portions)
Maximum 0.02 mm (0.0008 in)

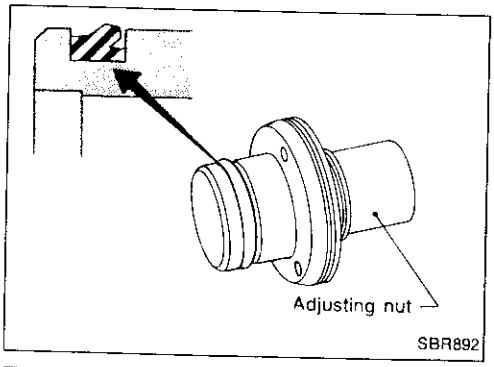

SBR892

Assembly

1. Install cup in the specified direction.

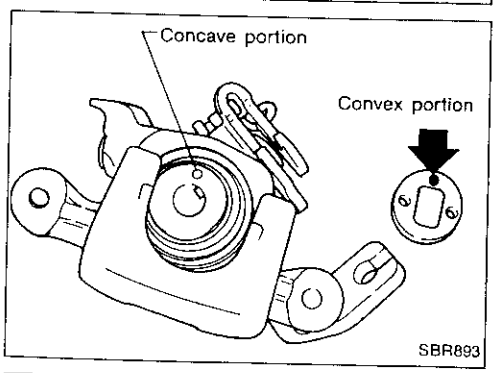

SBR893

2. Fit push rod into square hole in key plate. Also match convex portion of key plate with concave portion of cylinder.

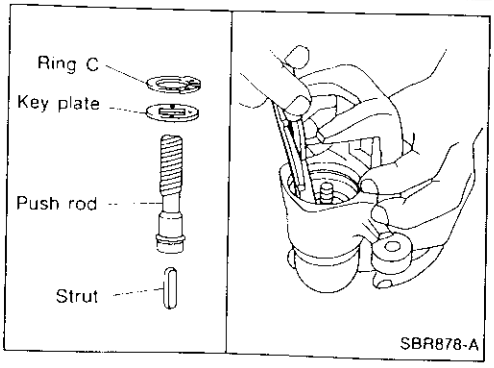

SBR878-A

3. Install ring C with a suitable tool.

Assembly (Cont'd)

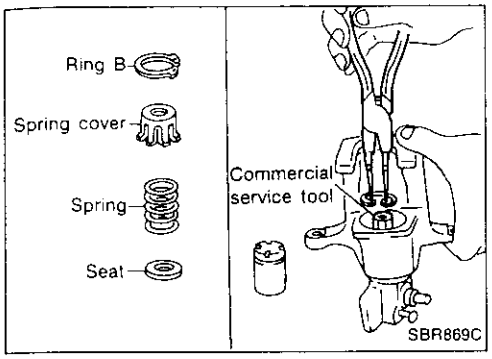

4. Install seat, spring, spring cover and ring B while depressing with suitable commercial service tool or press and drift.

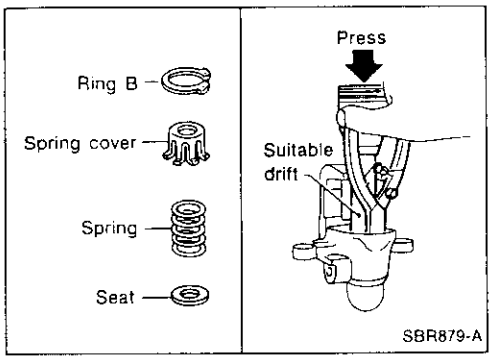

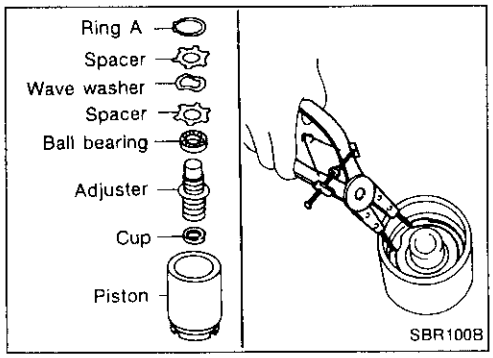

5. Install cup, adjuster, bearing, spacers, washers and ring A with a suitable tool.

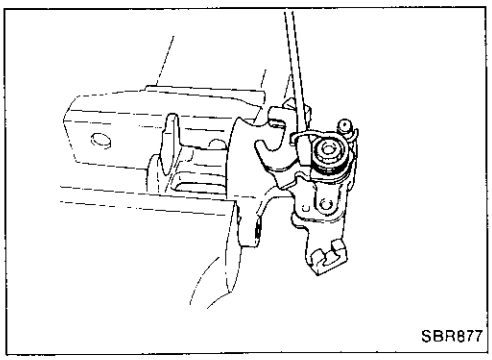

6. Fit parking brake lever and tighten nut.
7. Fit return spring in the order shown.

Installation

CAUTION:

- **Refill with new brake fluid "DOT 3" (Except for Europe) and "DOT3 or DOT4" (For Europe). For Europe, never mix different type brake fluids (DOT3 and DOT4).**
- **Never reuse drained brake fluid.**

1. Install brake hose to caliper securely.
2. Install all parts and secure all bolts.
3. Bleed air. Refer to "Bleeding Brake System" (BR-5).

SEC. 443

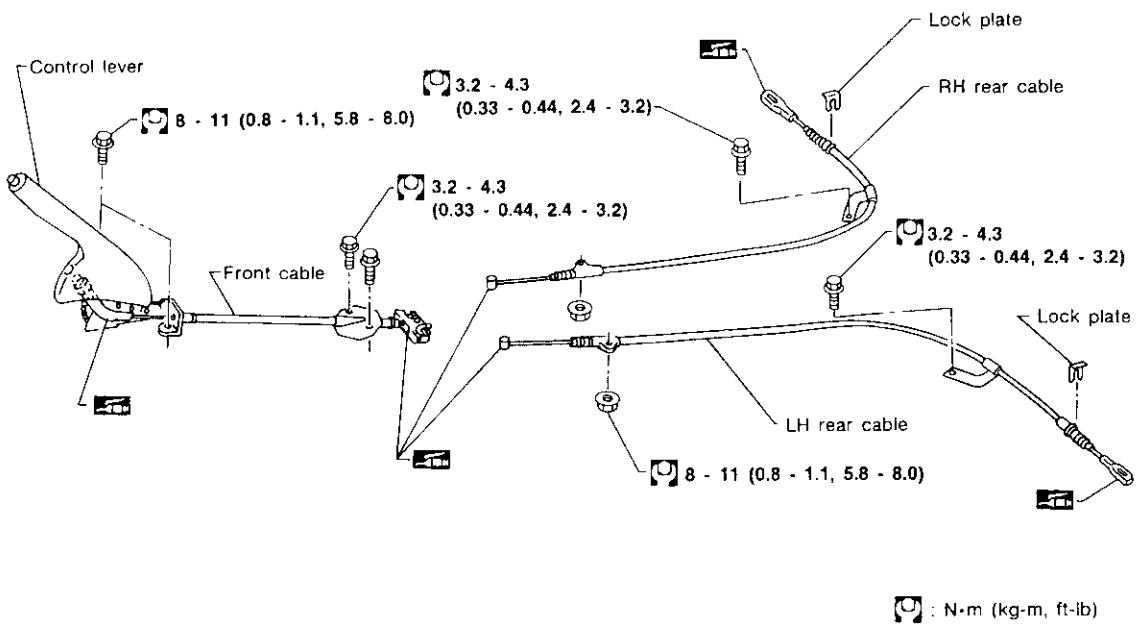

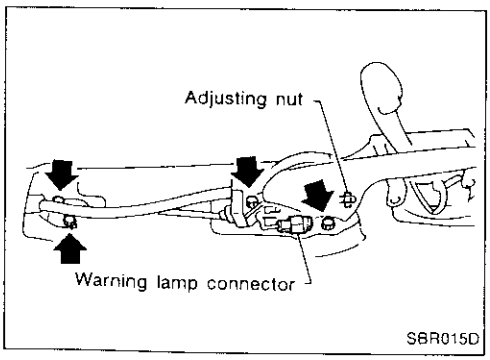

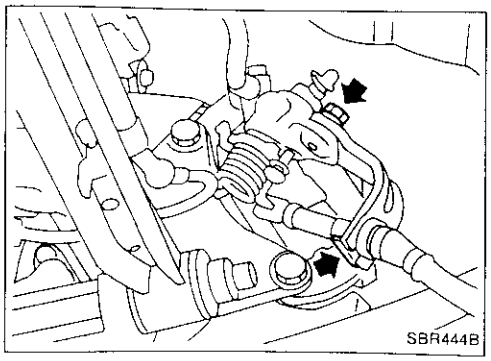

Removal and Installation

1. To remove parking brake cable, first remove center console.
2. Disconnect warning lamp connector.
3. Remove bolts, slacken off and remove adjusting nut.
4. Remove lock plate, then disconnect cable from caliper.

Removal and Installation (Cont'd)

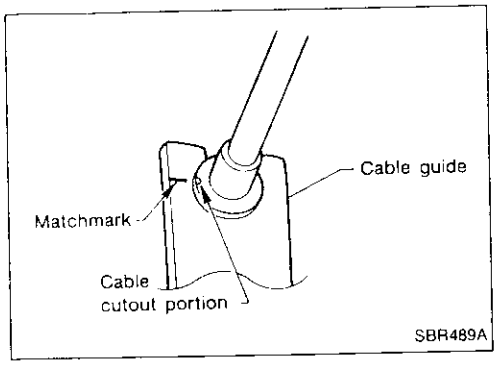

- When installing parking brake cable at rear caliper, make sure to align matchmark on cable guide.

Inspection

1. Check control lever for wear or other damage. Replace if necessary.
2. Check wires for discontinuity or deterioration. Replace if necessary.
3. Check warning lamp and switch. Replace if necessary.
4. Check parts at each connecting portion and, if found deformed or damaged, replace.

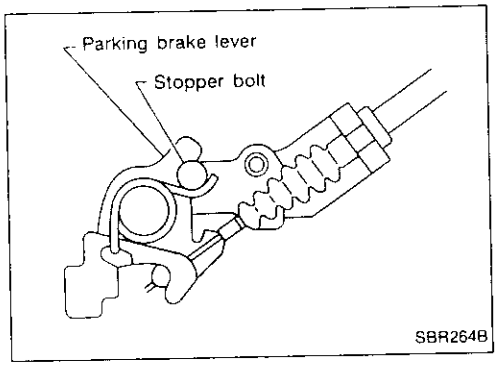

Adjustment

Pay attention to the following points after adjustment.

- There is no drag when control lever is being released.
- Parking brake lever returns to stopper bolt when control lever for rear disc brake is released.

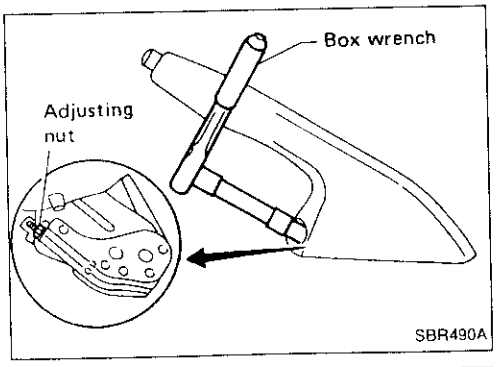

1. Pull control lever up by 4 or 5 notches.
2. Insert a box wrench into opening in control lever and loosen self-lock adjusting nut to slacken cables.
3. Completely push control lever down.
4. Forcefully depress brake pedal about five times (so that caliper is automatically set in position.).
5. Pull lever up by 4 or 5 notches.
6. Turn adjusting nut as shown in figure and adjust lever stroke to specified value.
7. Pull control lever with specified amount of force. Check lever stroke and ensure smooth operation.
   Number of notches : 7 - 9 [196 N (20 kg, 44 lb)]
8. Bend warning lamp switch plate to ensure the following. Warning lamp comes on when lever is lifted "A" notches, and goes out when fully released.
   Number of "A" notches : 1

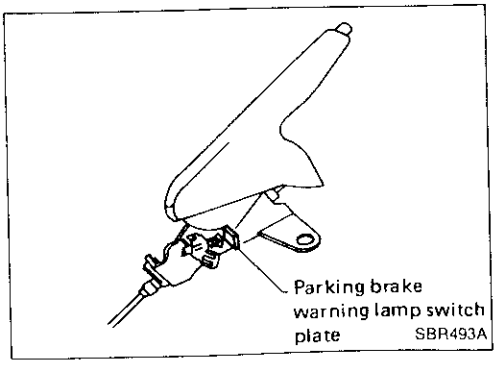

Purpose

The Anti-Lock Brake System (ABS) consists of electronic and hydraulic components. It allows for control of braking force so that locking of the wheels can be avoided.
The ABS:

1) Improves proper tracking performance through steering wheel operation.
2) Eases obstacle avoidance through steering wheel operation.
3) Improves vehicle stability.

Operation

- The ABS will not operate at speeds below 5 to 10 km/h (3 to 6 MPH) to completely stop the vehicle. (The speeds will vary according to road conditions.)
- The ABS has self-test capabilities. A mechanical noise may be heard as the ABS performs a self-test the first time the vehicle reaches 10 km/h (6 MPH). This is a normal part of the self-test feature. If a malfunction is found during this check, the anti-lock warning lamp will come on.
- During ABS operation, a mechanical noise may be heard. This is a normal condition.

ABS Hydraulic Circuit

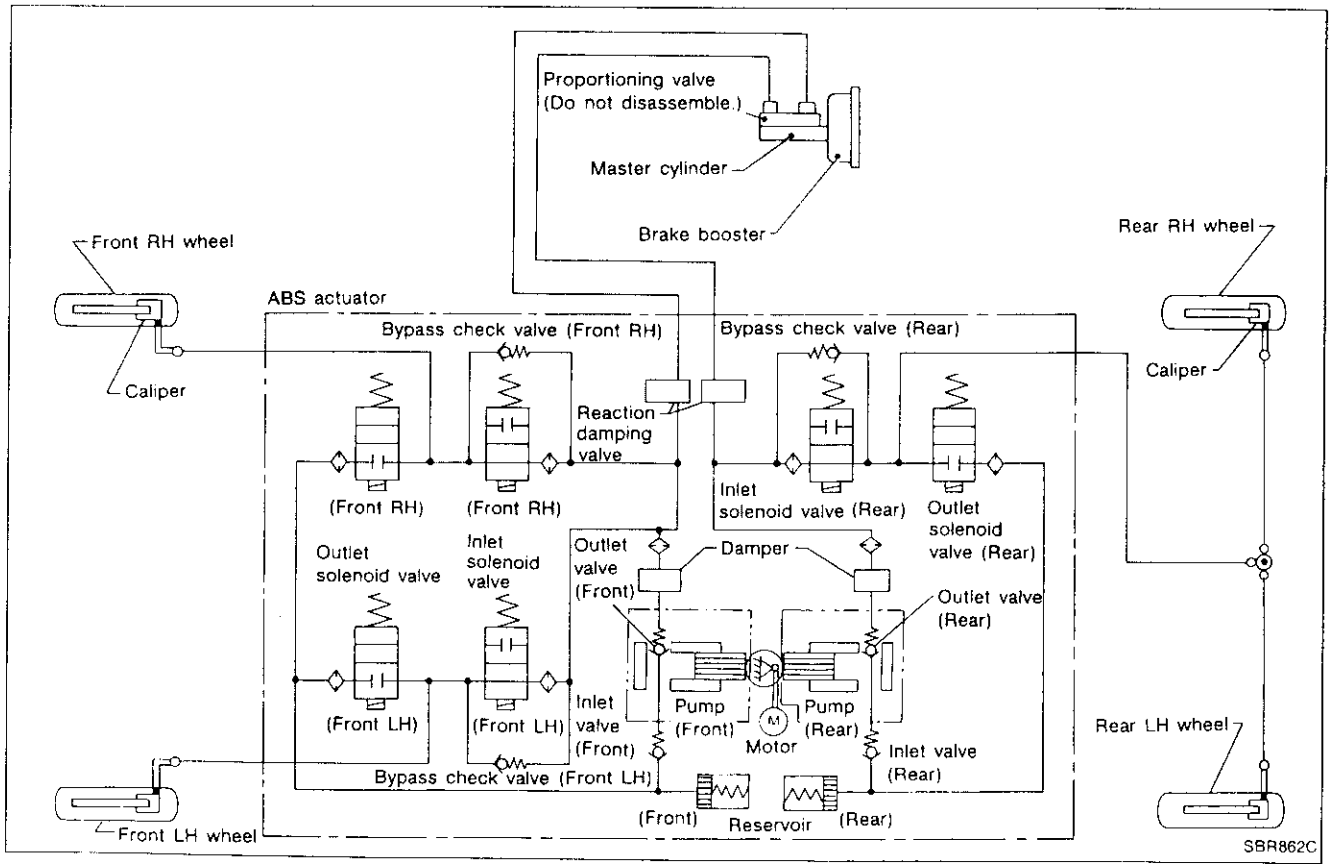

System Components

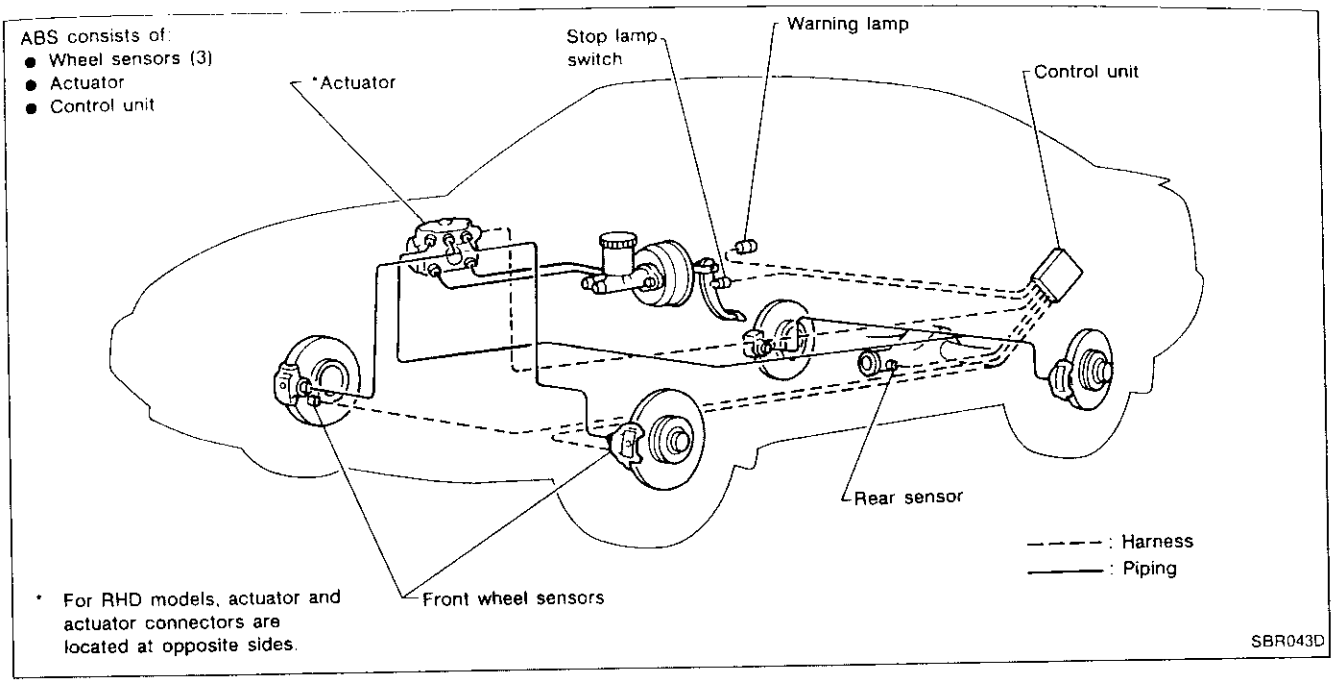

System Description

SENSOR

The sensor unit consists of a gear-shaped sensor rotor and a sensor element. The element contains a bar magnet wound with a coil. The sensor is installed on the back side of the brake rotor or the final drive. As the wheel rotates, the sensor generates a sine-wave pattern. The frequency and voltage increase(s) as the rotating speed increases.

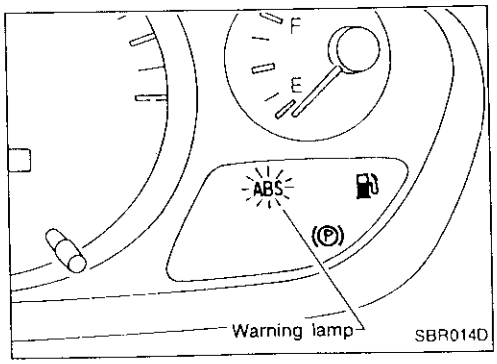

CONTROL UNIT

The control unit computes the wheel rotating speed by the signal current sent from the sensor. Then it supplies a DC current to the actuator solenoid valve. It also controls ON-OFF operation of the solenoid valve relay and motor relay. If any electrical malfunction should be detected in the system, the warning lamp is turned on. In this condition, the ABS will be deactivated, and the vehicle's brake system reverts to normal operation.

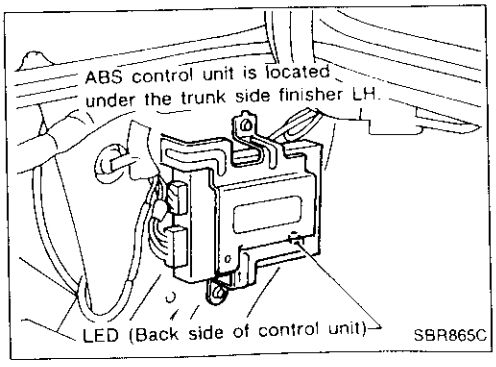

System Description (Cont'd)

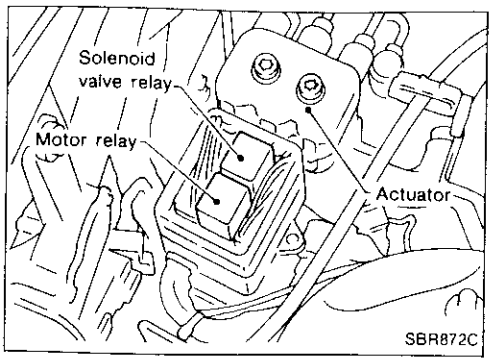

ACTUATOR

The actuator contains:

- An electric motor and pump
- Two relays
- Six solenoid valves, each inlet and outlet for
  - — LH front
  - — RH front
  - — LH and RH rear

These components control the hydraulic circuit. The ABS control unit directs the actuator to increase, hold or decrease hydraulic pressure to all or individual wheels.

ABS actuator operation

		Inlet solenoid valve	Outlet solenoid valve	
Normal brake operation		OFF (Open)	OFF (Closed)	Master cylinder brake fluid pressure is directly transmitted to caliper via the inlet solenoid valve.
ABS operation	Pressure hold	ON (Closed)	OFF (Closed)	Hydraulic circuit is shut off to hold the caliper brake fluid pressure.
	Pressure decrease	ON (Closed)	ON (Open)	Caliper brake fluid is sent to reservoir via the outlet solenoid valve. Then it is pushed up to the master cylinder by pump.
	Pressure increase	OFF (Open)	OFF (Closed)	Master cylinder brake fluid pressure is transmitted to caliper.

Removal and Installation

CAUTION:
Be careful not to damage sensor edge and sensor rotor teeth. When removing the front wheel hub or final drive assemblies, first remove the ABS wheel sensor from the assembly. Failure to do so may result in damage to the sensor wires making the sensor inoperative.

WHEEL SENSORS

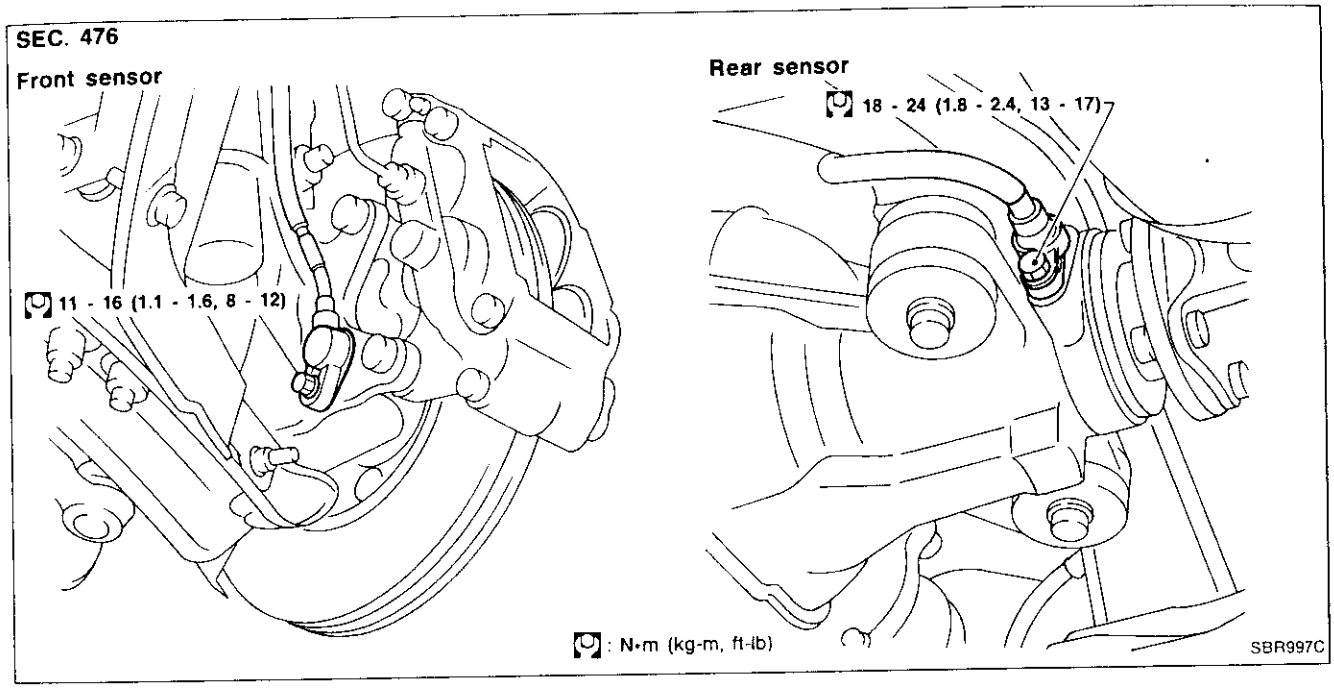

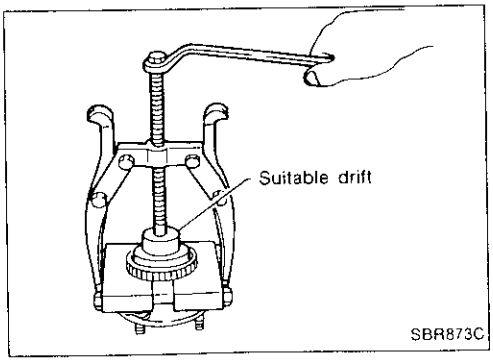

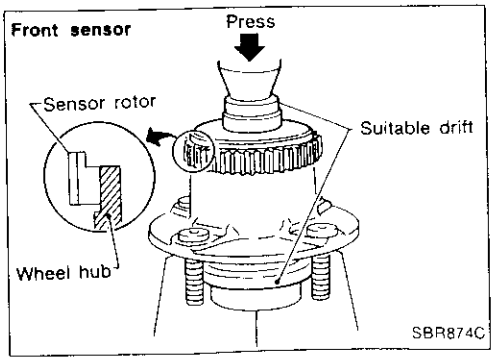

SENSOR ROTOR

Removal

1. Remove the front wheel hub or final drive companion flange. Refer to FA and PD sections.
2. Remove the sensor rotor using suitable puller, drift and bearing replacer.

Installation

Install the sensor rotor using suitable drift and press.

- Always replace sensor rotor with new one.
- Pay attention to the direction of front sensor rotor as show in figure.

Removal and Installation (Cont'd)

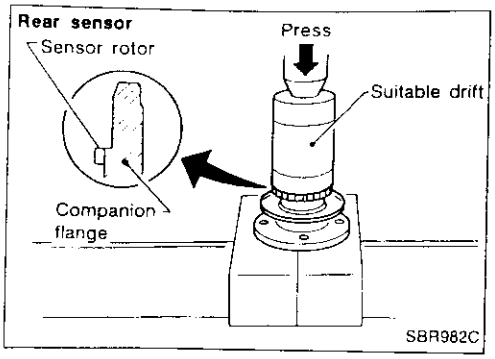

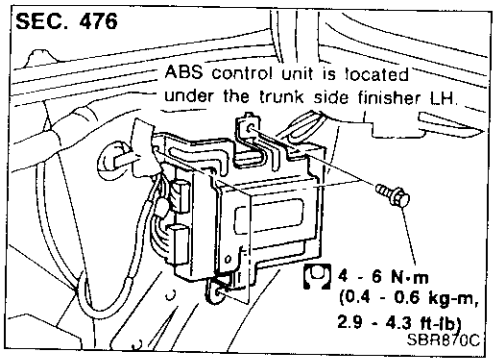

CONTROL UNIT

Location: Under trunk side finisher LH.

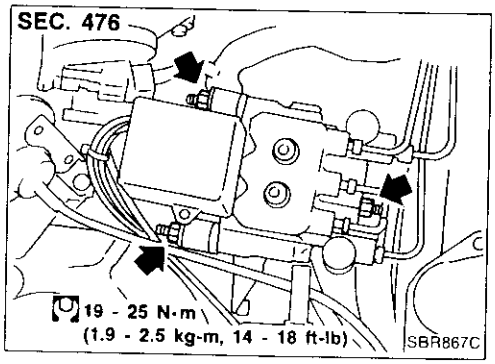

ACTUATOR

Removal

1. Disconnect battery cable.
2. Drain brake fluid. Refer to "Changing Brake Fluid" (BR-5).
3. Apply different colored paint to each pipe connector and actuator to prevent incorrect connection.
4. Disconnect connector, brake pipes and remove fixing nuts and actuator ground cable.

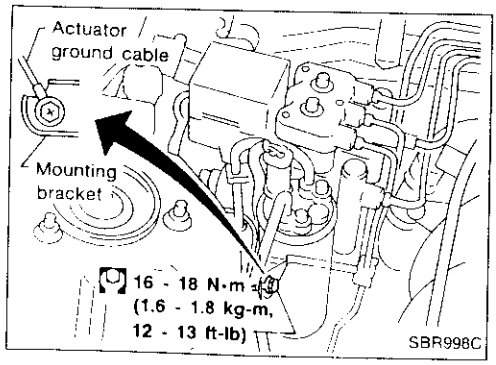

Installation

CAUTION:

After installation, refill brake fluid. Then bleed air. Refer to "Bleeding Brake System" (BR-5).

1. Tighten actuator ground cable.

Place ground cable at a notch of mounting bracket.

2. Connect brake pipes temporarily.
3. Tighten fixing nuts.
4. Tighten brake pipes.
5. Fix actuator harness clip on the mounting bracket.
6. Connect connector and battery cable.

ACTUATOR RELAYS

1. Disconnect battery cable.
2. Remove actuator relay cover.
3. Pull out relays.

Wiring Diagram — ABS —

LHD MODELS

BR-ABS-01

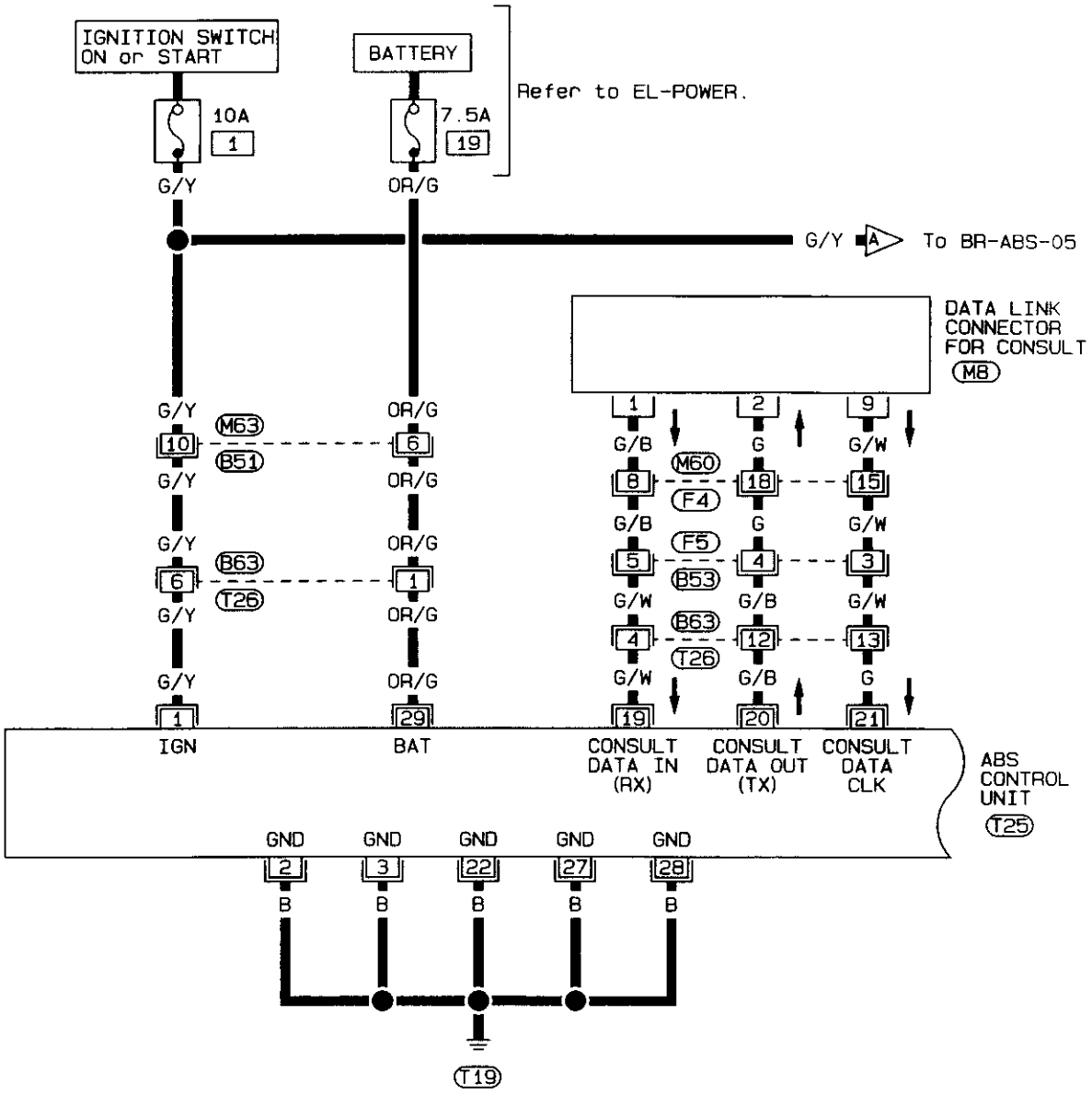

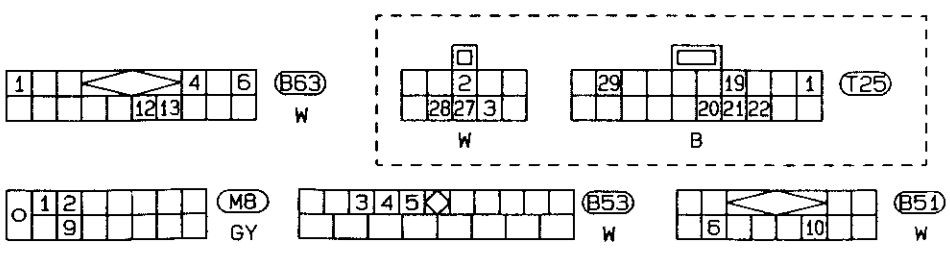

Refer to last page (Foldout page).
M60, F4

SBR001D

Wiring Diagram — ABS — (Cont'd)

BR-ABS-02

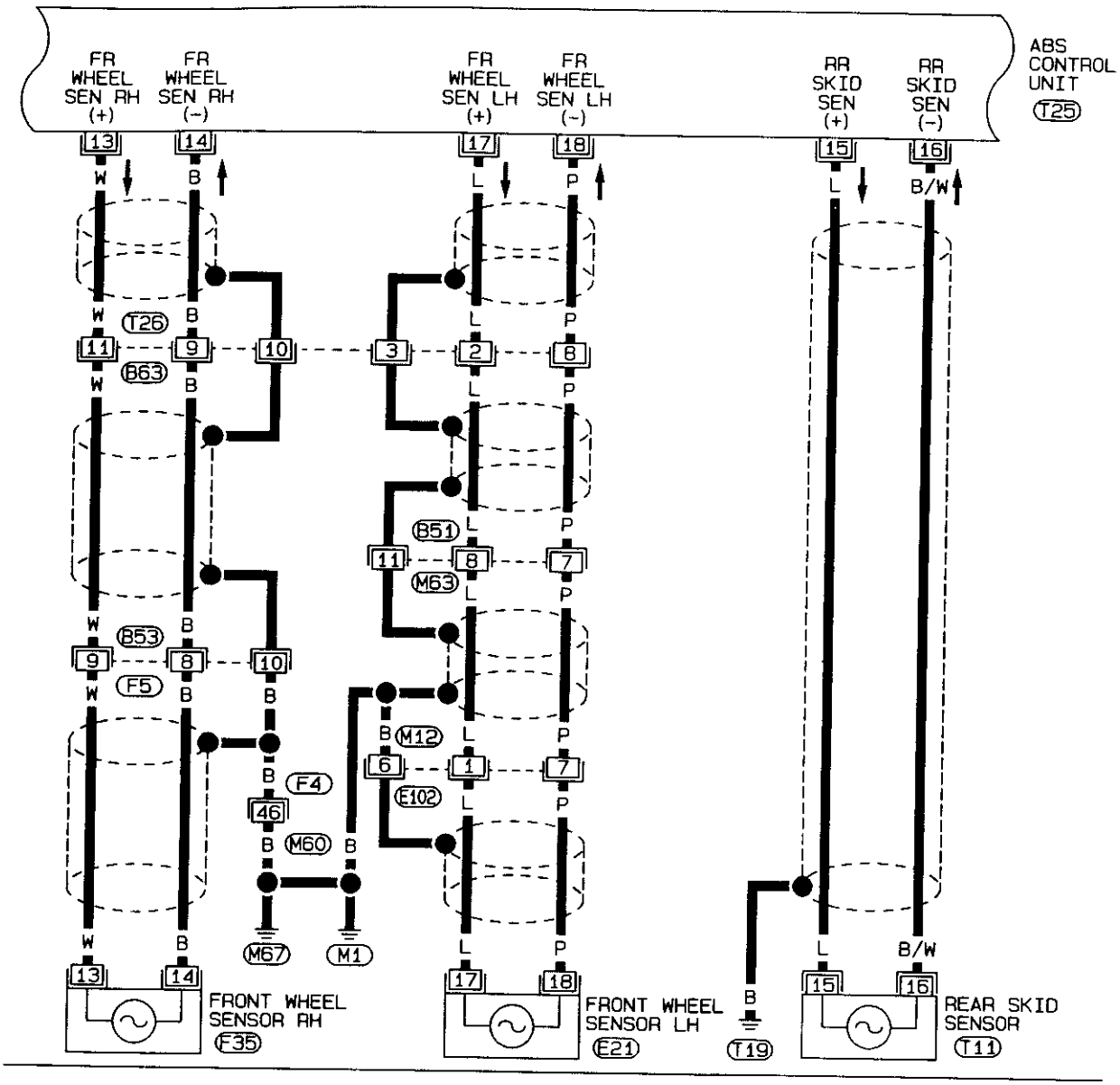

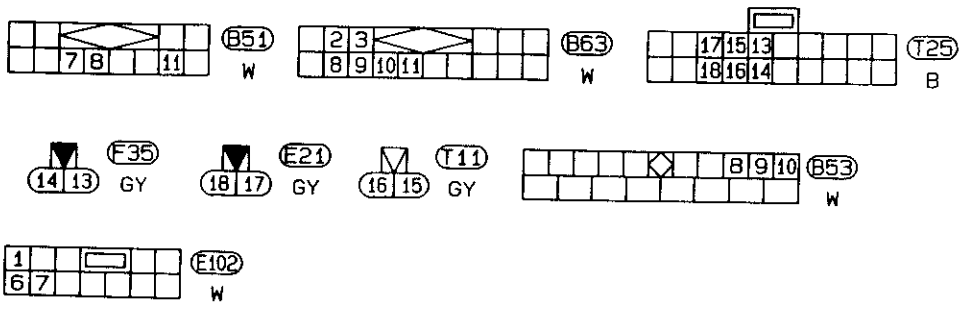

Refer to last page (Foldout page).
M60, F4

SBR002D

Wiring Diagram — ABS — (Cont'd)

BR-ABS-03

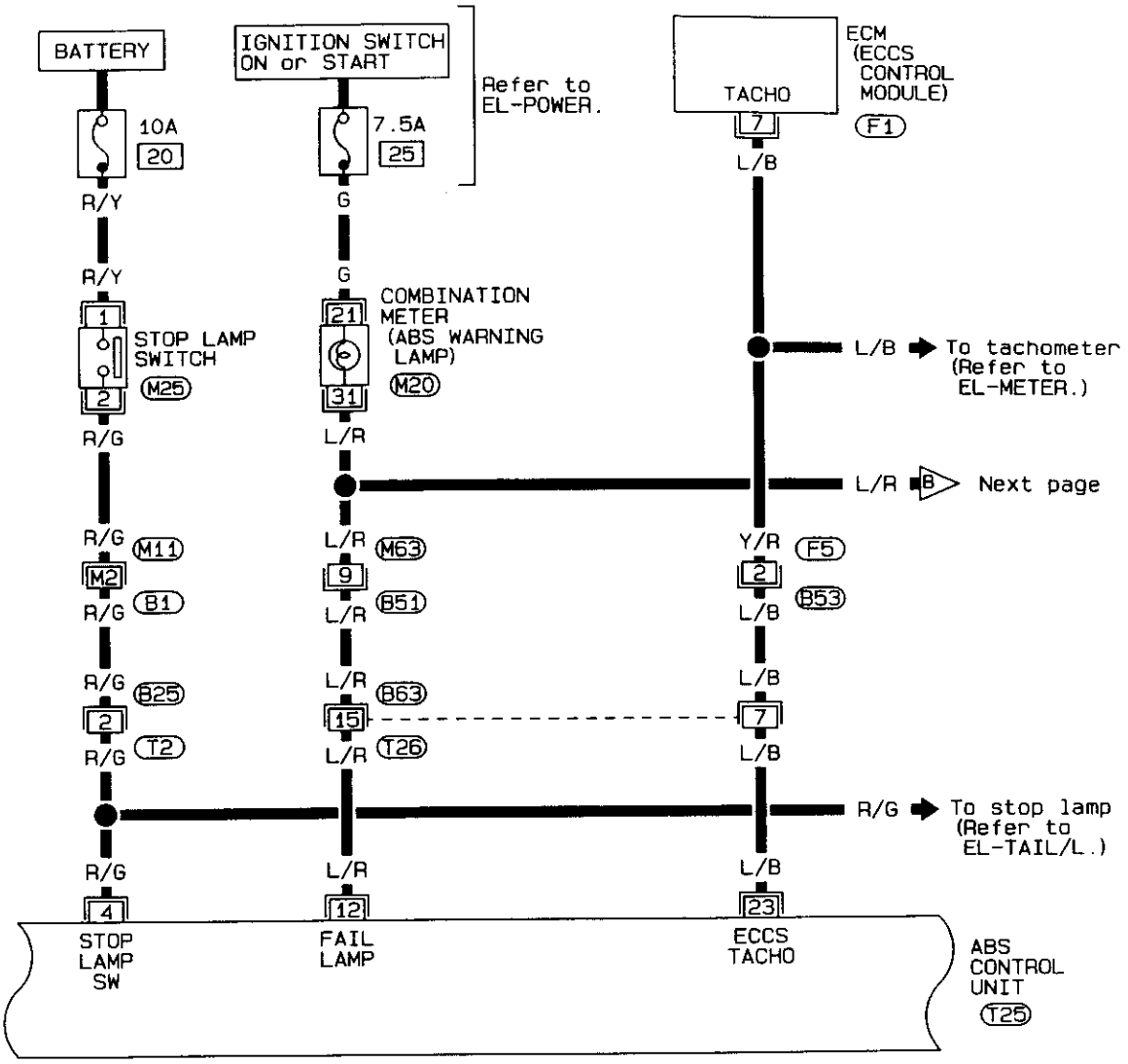

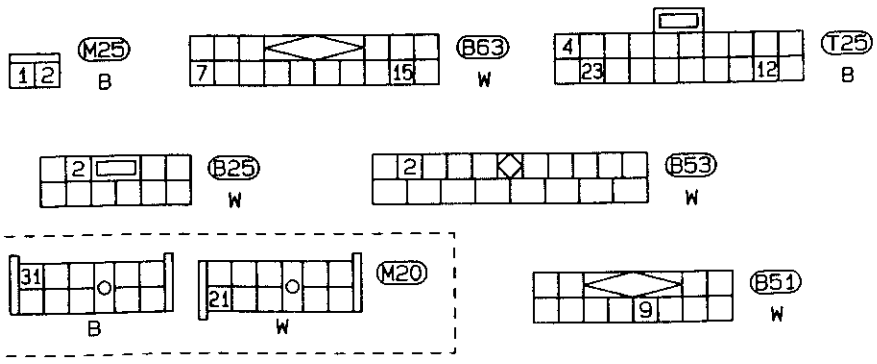

Refer to last page (Foldout page).

M11, B1, F1

SBR003D

Wiring Diagram — ABS — (Cont'd)

BR-ABS-04

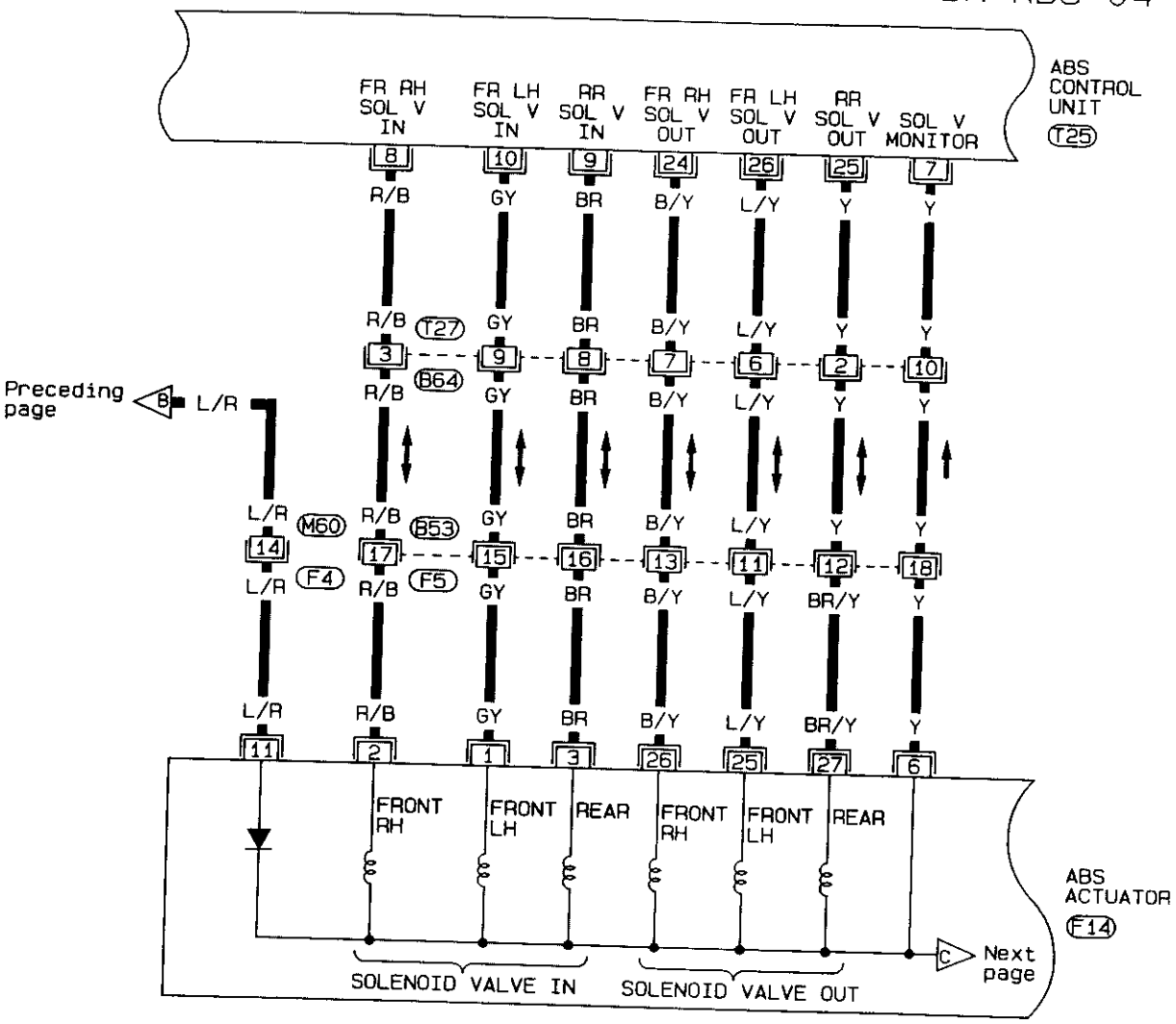

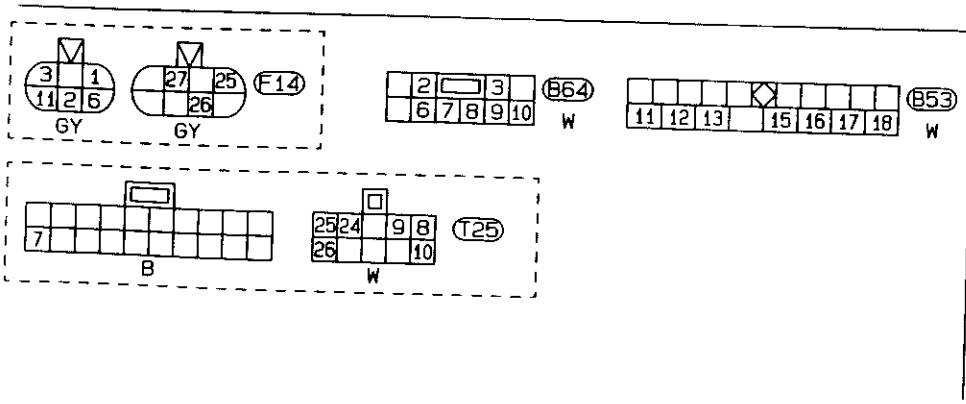

SBR004D

Wiring Diagram — ABS — (Cont'd)

BR-ABS-05

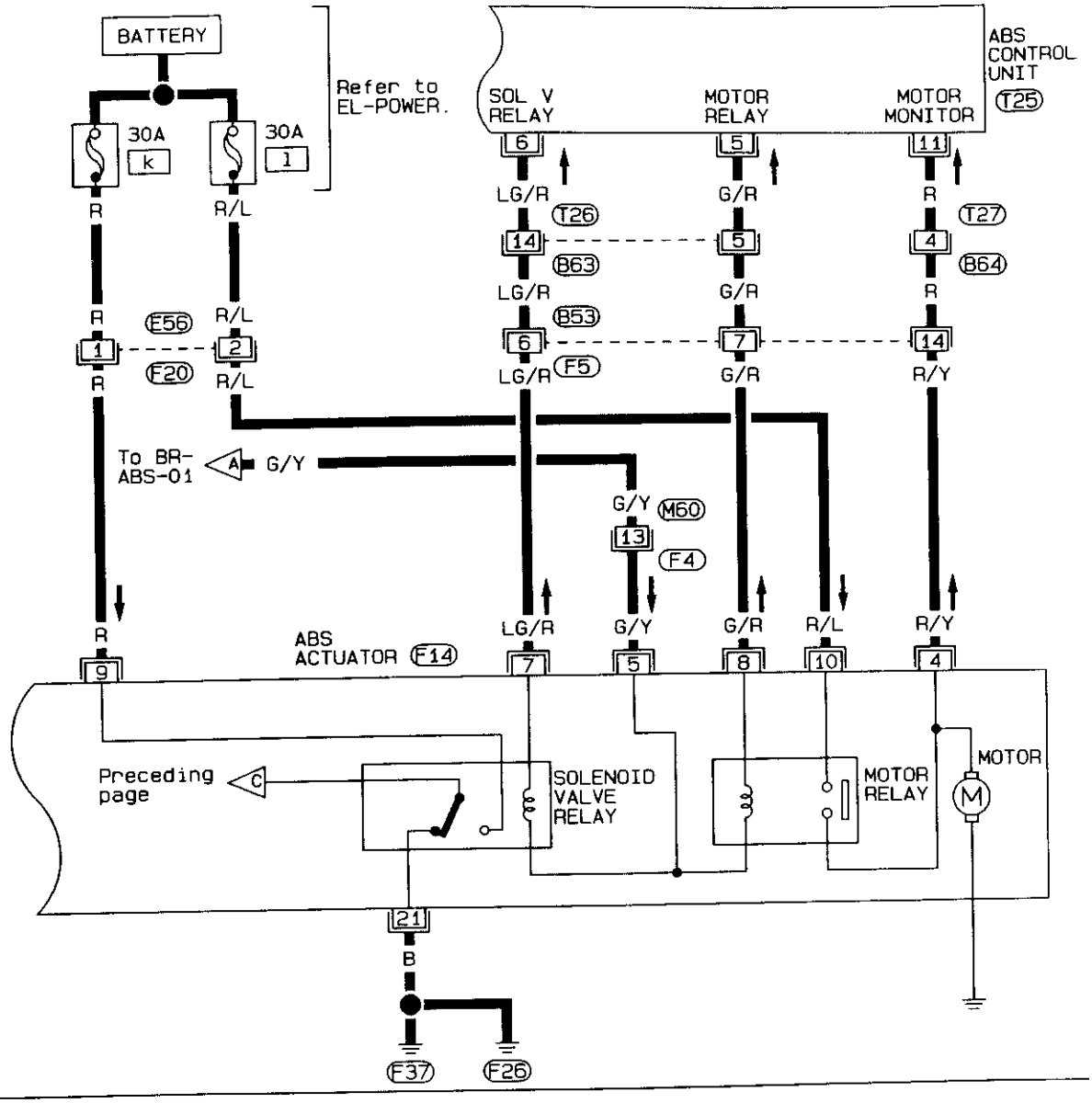

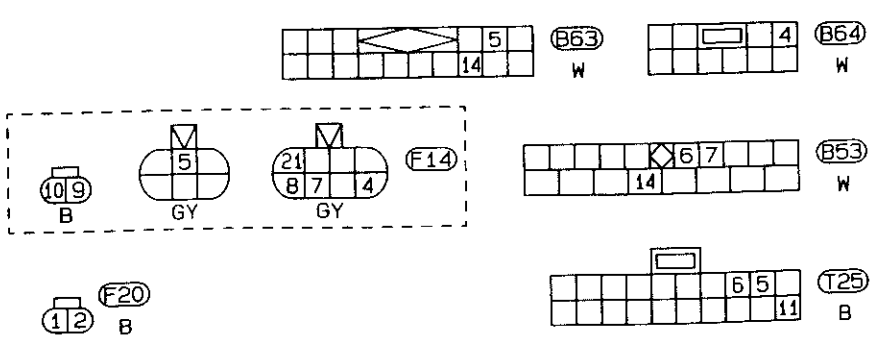

Refer to last page (Foldout page).

M60, F4

SBR005D

Wiring Diagram — ABS — (Cont'd)

RHD MODELS

BR-ABS-06

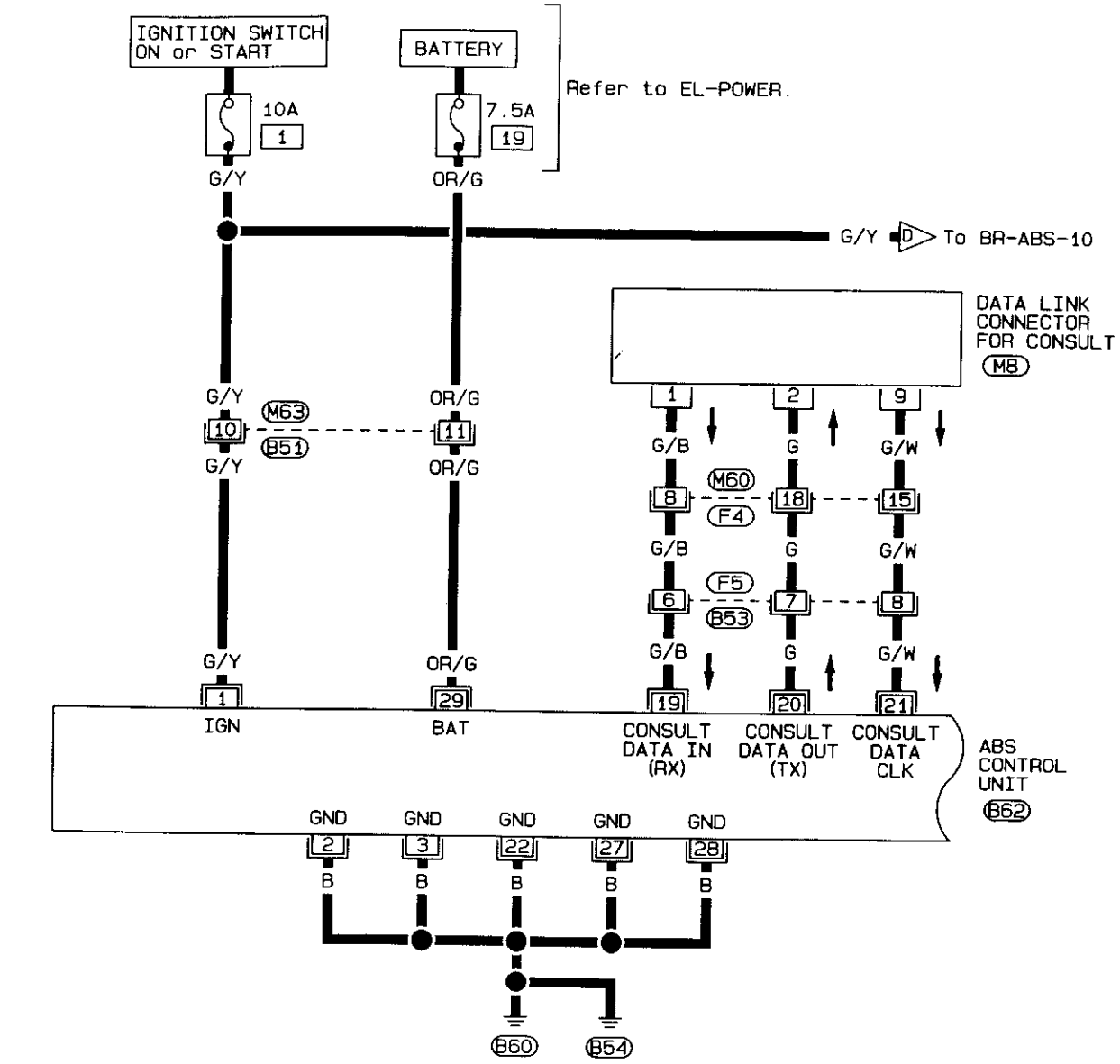

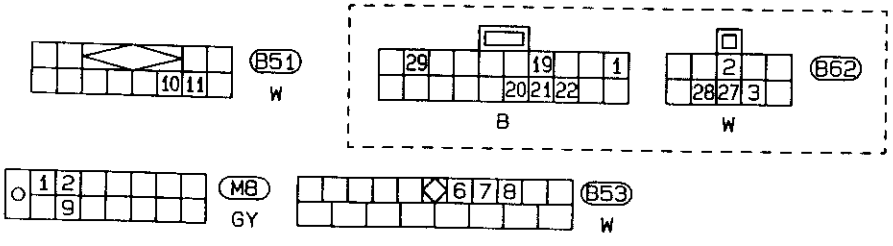

Refer to last page (Foldout page).
M60, F4

SBR006D

Wiring Diagram — ABS — (Cont'd)

BR-ABS-07

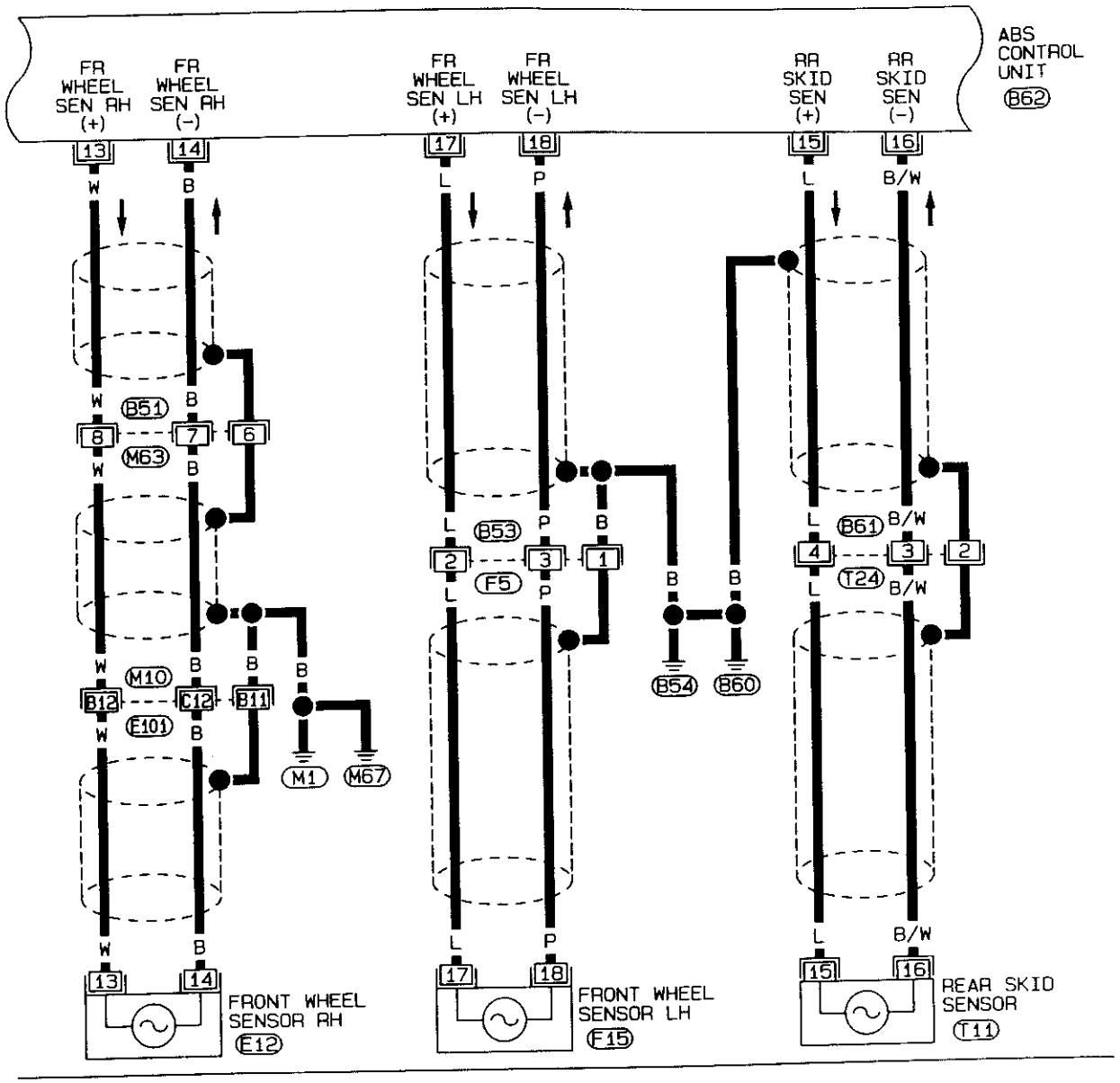

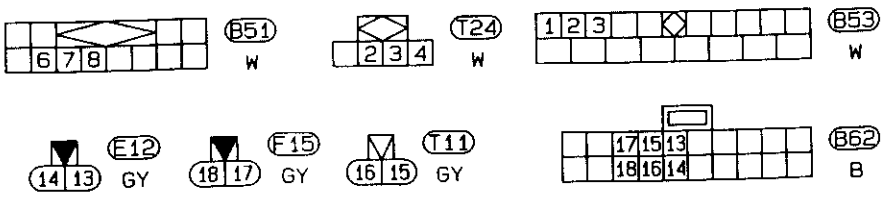

Refer to last page (Foldout page).

M10, E101

SBR007D

Wiring Diagram — ABS — (Cont'd)

BR-ABS-08

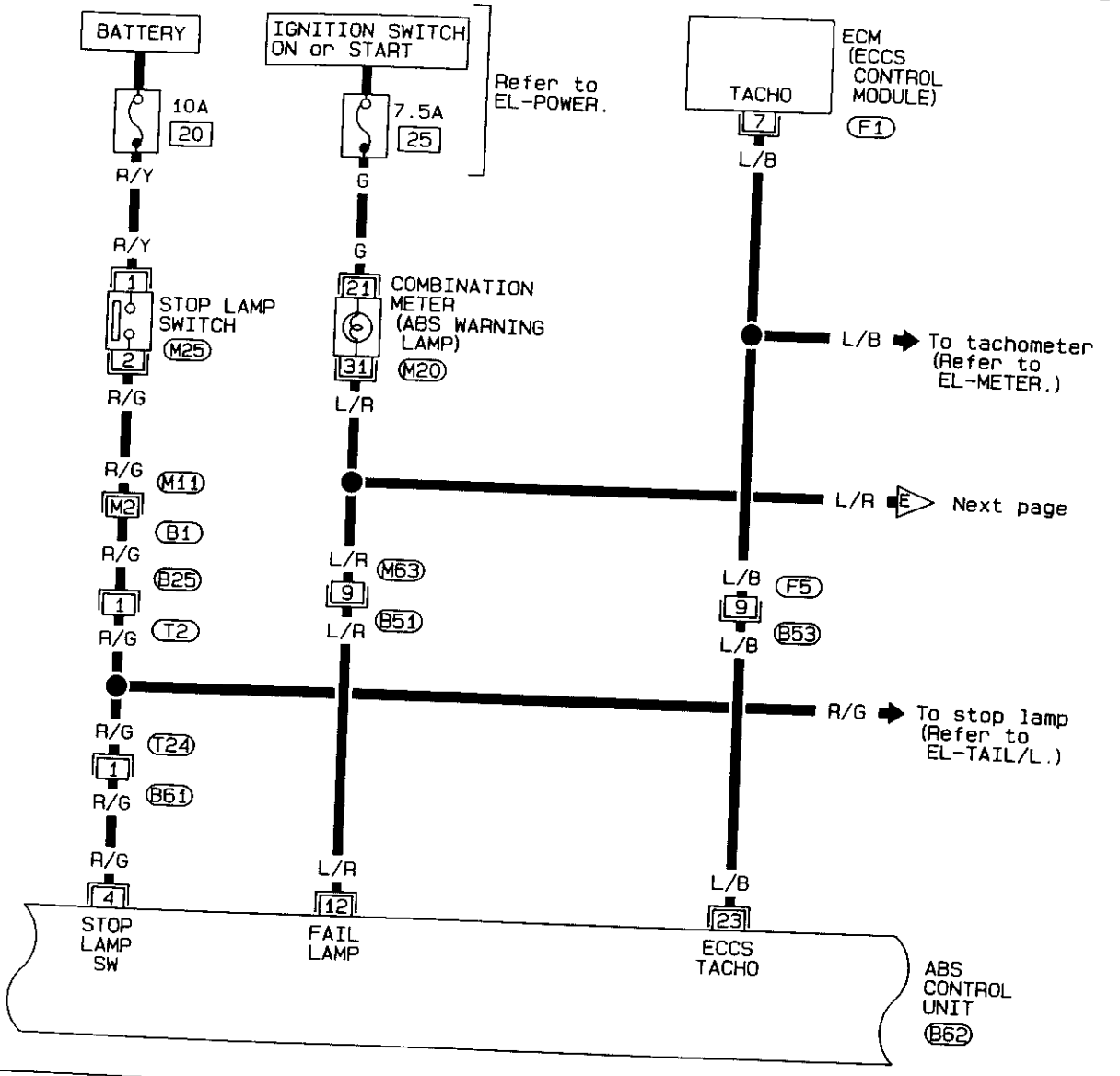

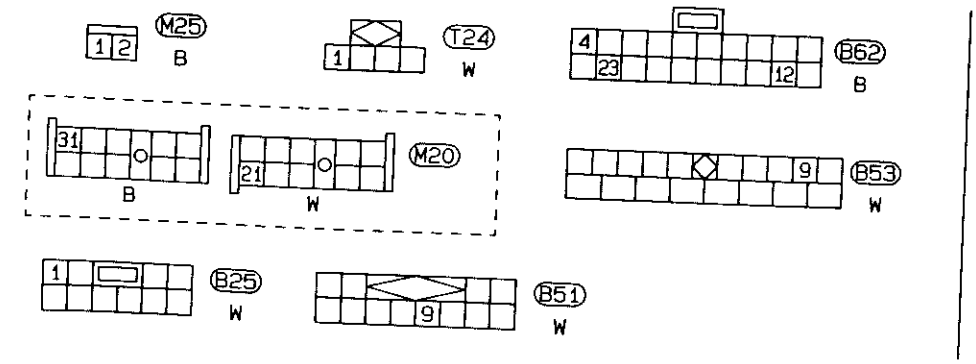

Refer to last page (Foldout page).

M11, B1
F1

SBR008D

Wiring Diagram — ABS — (Cont'd)

BR-ABS-09

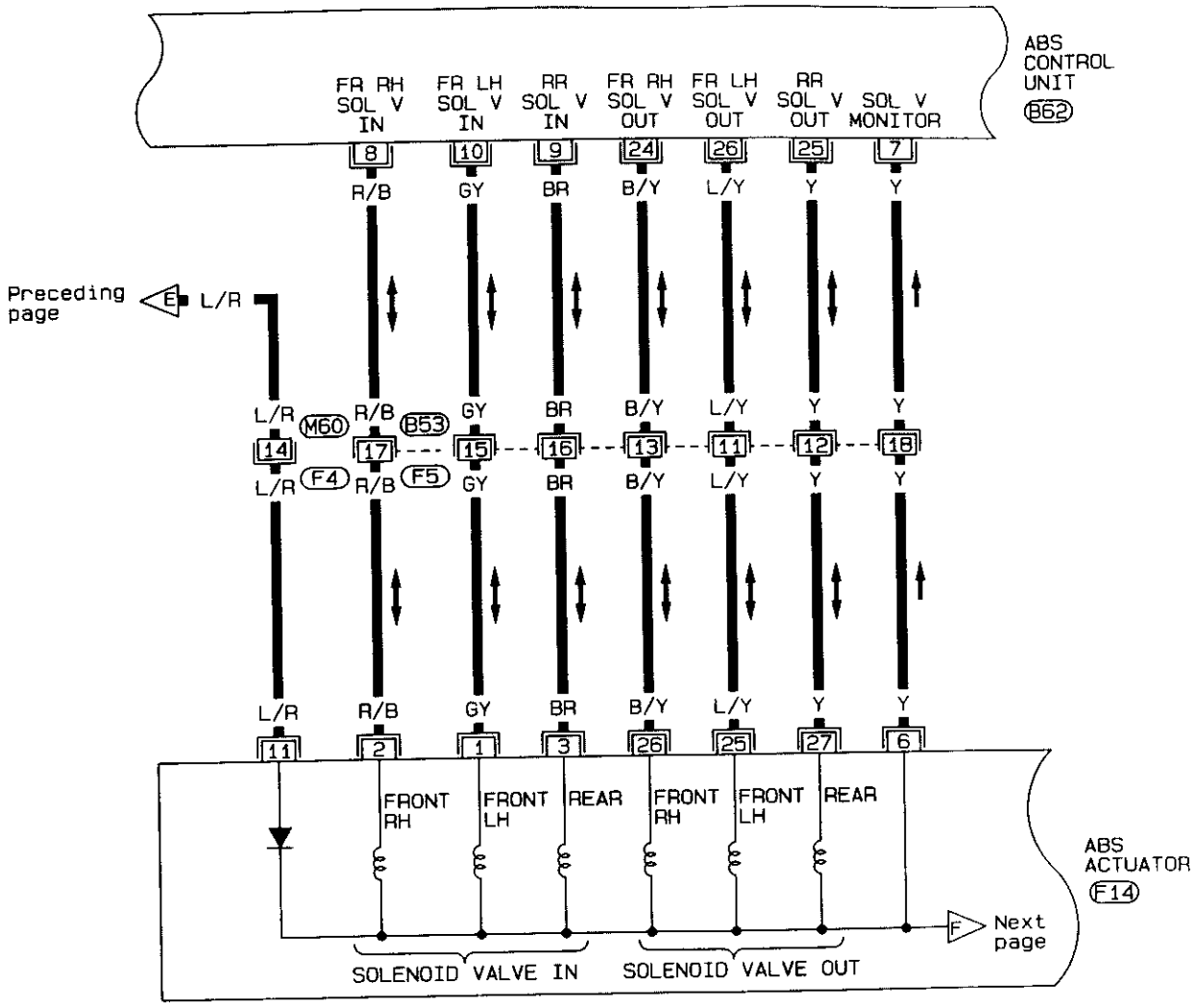

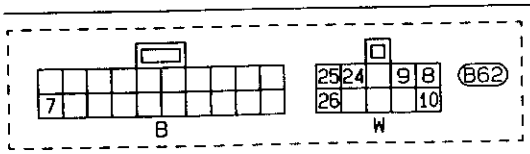

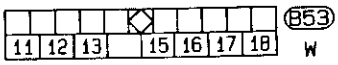

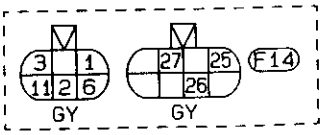

Refer to last page (Foldout page).

M60, F4

SBR009D

Wiring Diagram — ABS — (Cont'd)

BR-ABS-10

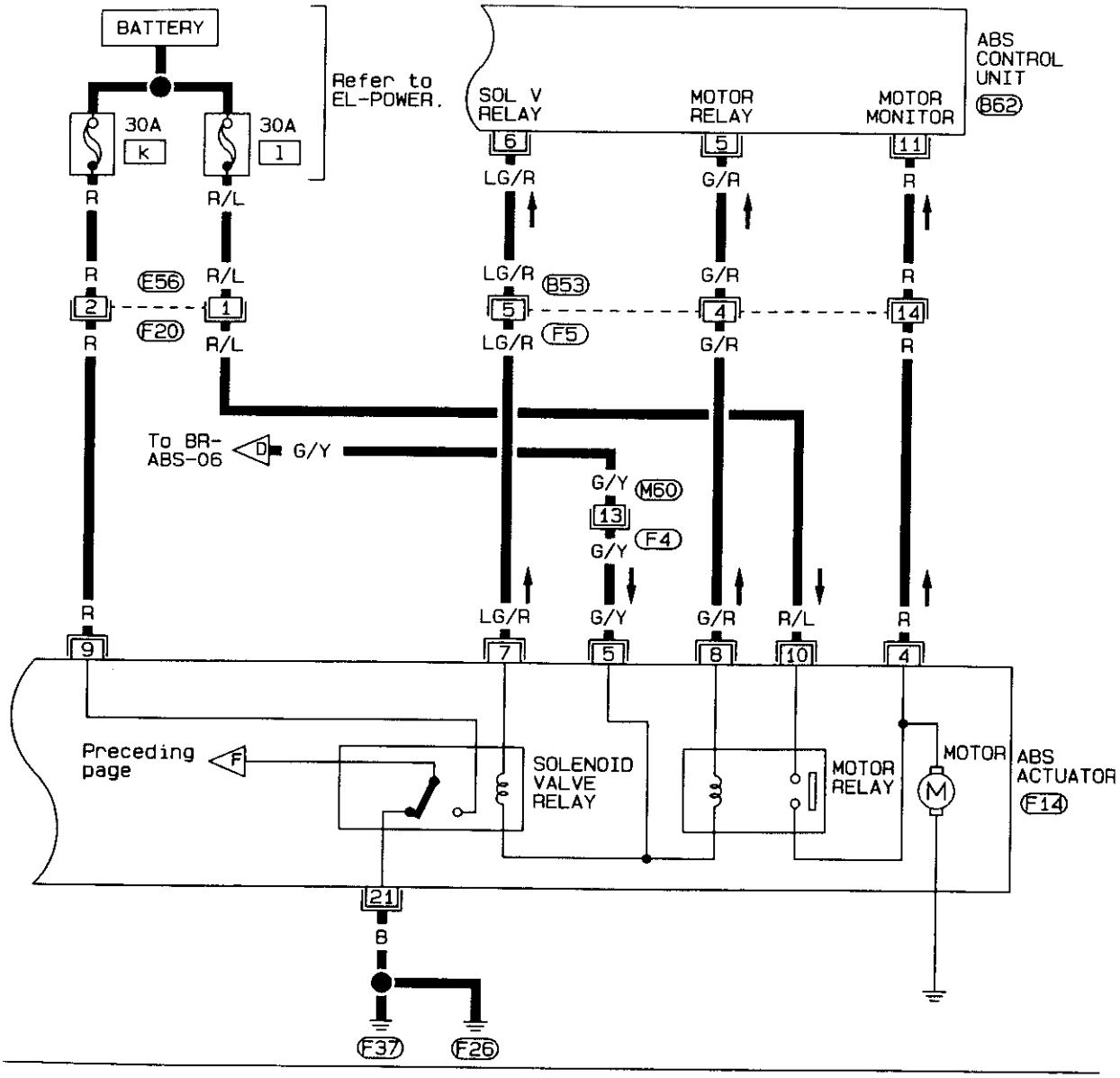

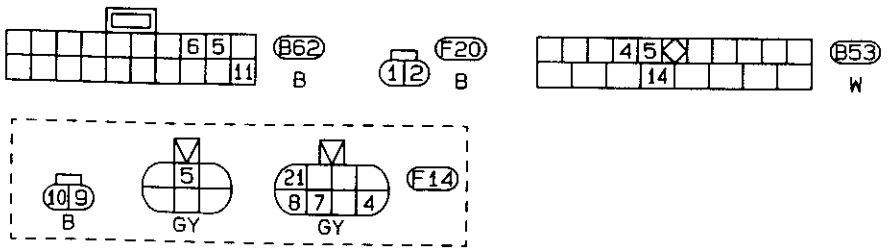

Refer to last page (Foldout page).

M60, F4

SBR010D

Contents

How to Perform Trouble Diagnoses for Quick and Accurate Repair BR-39
Self-diagnosis BR-40
Component Parts and Harness Connector Location BR-43
Preliminary Check BR-44
Ground Circuit Check BR-45
Circuit Diagram for Quick Pinpoint Check BR-46
Diagnostic Procedure 1 Warning lamp does not work BR-47
Diagnostic Procedure 2 Control unit or ground circuit BR-49
Diagnostic Procedure 3 Actuator solenoid valve BR-51
Diagnostic Procedure 4 Wheel sensor or rotor BR-52
Diagnostic Procedure 5 Motor relay or motor BR-54
Diagnostic Procedure 6 Solenoid valve relay BR-57
Diagnostic Procedure 7 Power supply BR-60
Diagnostic Procedure 8 Memory volt stop BR-61
Diagnostic Procedure 9 Pedal vibration and noise BR-62
Diagnostic Procedure 10 Long stopping distance BR-63
Diagnostic Procedure 11 Unexpected pedal action BR-63
Diagnostic Procedure 12 ABS does not work BR-64
Diagnostic Procedure 13 ABS works frequently BR-64
Electrical Component Inspection BR-65

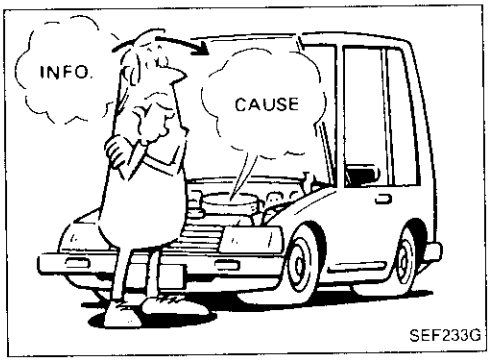

SEF233G

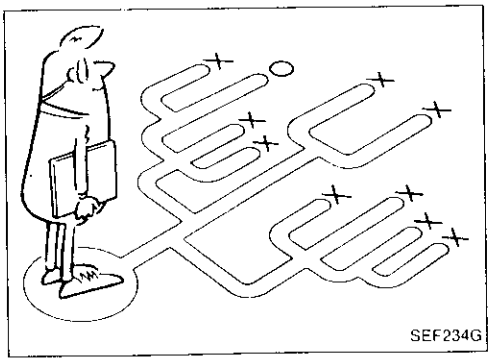
SEF234G

How to Perform Trouble Diagnoses for Quick and Accurate Repair

INTRODUCTION

The ABS system has an electronic control unit to control major functions. The control unit accepts input signals from sensors and instantly drives actuators. It is essential that both kinds of signals are proper and stable. It is also important to check for conventional problems: such as air leaks in the booster or lines, lack of brake fluid, or other problems with the brake system.

It is much more difficult to diagnose a problem that occurs intermittently rather than continuously. Most intermittent problems are caused by poor electric connections or faulty wiring. In this case, careful checking of suspicious circuits may help prevent the replacement of good parts.

A visual check only may not find the cause of the problems, so a road test should be performed.

Before undertaking actual checks, take just a few minutes to talk with a customer who approaches with a ABS complaint. The customer is a very good source of information on such problems; especially intermittent ones. Through the talks with the customer, find out what symptoms are present and under what conditions they occur.

Start your diagnosis by looking for "conventional" problems first. This is one of the best ways to troubleshoot brake problems on an ABS controlled vehicle.

Self-diagnosis

FUNCTION

- When a problem occurs in the ABS, the warning lamp on the instrument panel comes on.
- A maximum of three malfunctions are stored in the memory of the ABS control unit.

Erase the self-diagnosis results stored in the control unit after malfunctions are repaired (See next page).

- The self-diagnosis results are identified by Consult or LED on the control unit.

A

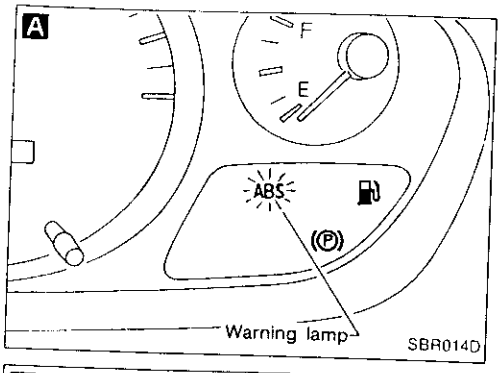

B

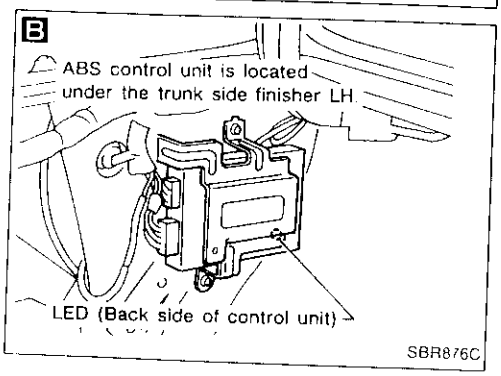

SELF-DIAGNOSIS PROCEDURE

Start engine.
Drive vehicle over 15 km/h (9 MPH) for at least one minute.

↓

A

Stop vehicle with engine running.
Make sure that the ABS warning lamp activates.

↓

B

The LED on the ABS control unit flashes to indicate the malfunction code No.

↓

Verify the location of the malfunction with the malfunction code chart. Then make necessary repairs following the diagnostic procedures.

↓

After the malfunctions are repaired, erase the self-diagnostic results stored in the control unit.
Disconnect connectors for ABS control unit or the battery negative terminal for at least one minute.

↓

Check warning lamp for deactivation after driving vehicle over 15 km/h (9 MPH) for at least one minute.

↓

Test the ABS in a safe area to verify that it functions properly.

Self-diagnosis (Cont'd)

HOW TO READ SELF-DIAGNOSTIC RESULTS (Malfunction codes)

- Determine the code No. by counting the number of times the LED flashes on and off.
- The malfunction code chart is given on the next page.

Example Malfunction code No. 12 and 23

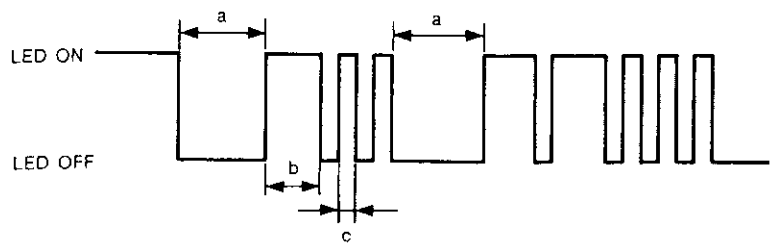

a : 3 seconds (Clearance between code No.)
b : 0.6 second (Ten digits)
c : 0.3 second (One digit)

SBR877C

HOW TO ERASE SELF-DIAGNOSTIC RESULTS (Malfunction codes)

- Disconnect ABS control unit connectors or battery negative terminal for at least one minute.

Self-diagnosis (Cont'd)

MALFUNCTION CODE/SYMPTOM CHART

Code No. (No. of LED flashes)	Malfunctioning part and circuit	Diagnostic procedure
01	Front right sensor (open-circuit)	4
02	Front left sensor (open-circuit)	4
03	Rear sensor (open-circuit)	4
05	Front right sensor (short-circuit)	4
06	Front left sensor (short-circuit)	4
07	Rear sensor (short-circuit)	4
11	Actuator front right inlet solenoid valve (open-circuit)	3
12	Actuator front left inlet solenoid valve (open-circuit)	3
13	Actuator rear inlet solenoid valve (open-circuit)	3
15	Actuator front right outlet solenoid valve (open-circuit)	3
16	Actuator front left outlet solenoid valve (open-circuit)	3
17	Actuator rear outlet solenoid valve (open-circuit)	3
21	Actuator front right inlet solenoid valve (short-circuit)	3
22	Actuator front left inlet solenoid valve (short-circuit)	3
23	Actuator rear inlet solenoid valve (short-circuit)	3
25	Actuator front right outlet solenoid valve (short-circuit)	3
26	Actuator front left outlet solenoid valve (short-circuit)	3
27	Actuator rear outlet solenoid valve (short-circuit)	3
41	Solenoid valve relay circuit (unable to turn off)	6
42	Solenoid valve relay circuit (unable to turn on)	6
43	Actuator motor or motor relay (unable to turn off)	5
44	Actuator motor or motor relay (unable to turn on)	5
47	Power supply (High voltage)	7
48	Power supply (Low voltage)	7
45, 46, 77 LED deactivation or continuous activation	Control unit Ground circuit	2
Warning lamp does not come on when ignition switch is turned on.	Fuse, warning lamp bulb or warning lamp circuit Control unit power supply circuit	1
Pedal vibration and noise	—	9
Long stopping distance	—	10
Unexpected pedal action	—	11
ABS does not work.	—	12
ABS works frequently.	—	13

Component Parts and Harness Connector Location

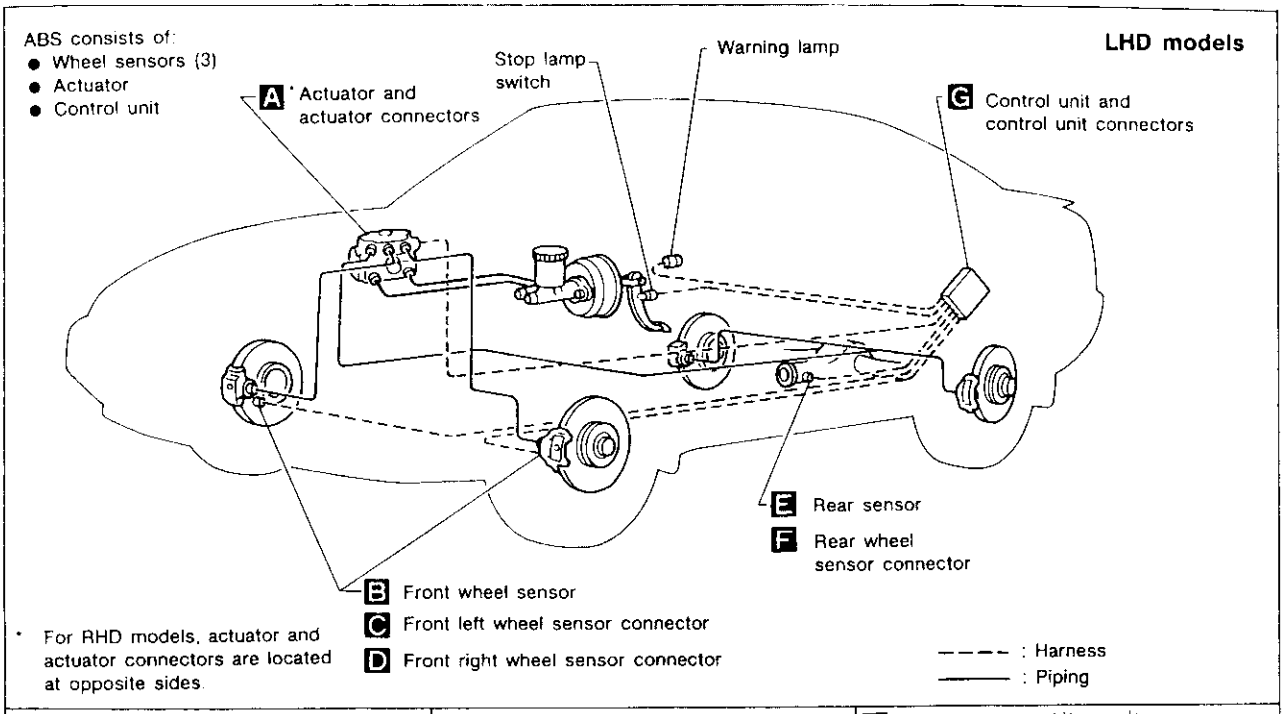

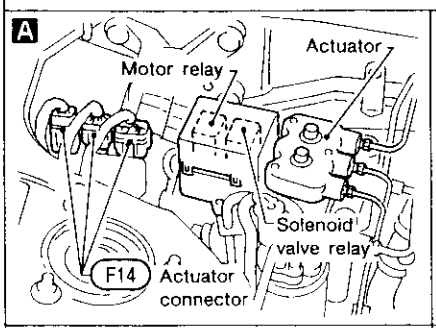

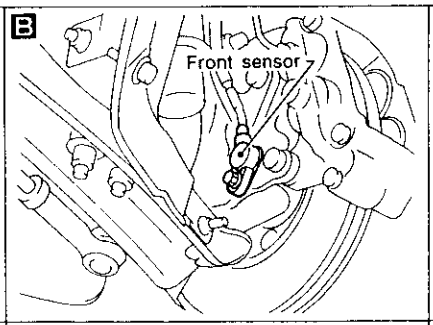

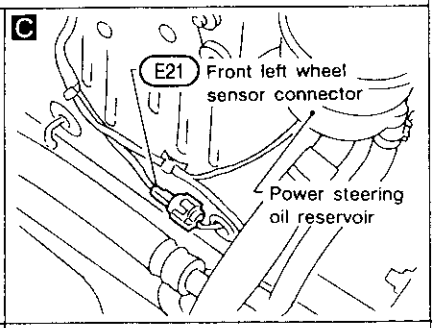

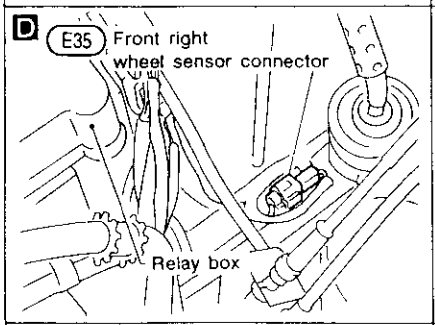

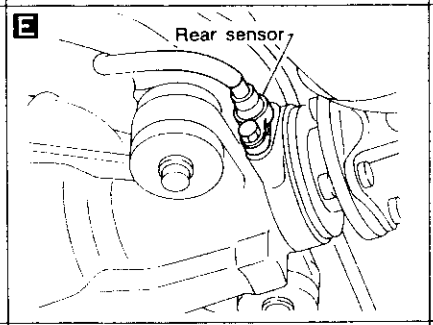

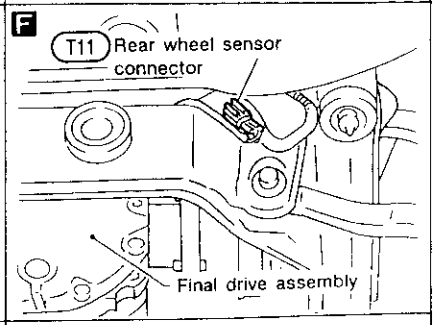

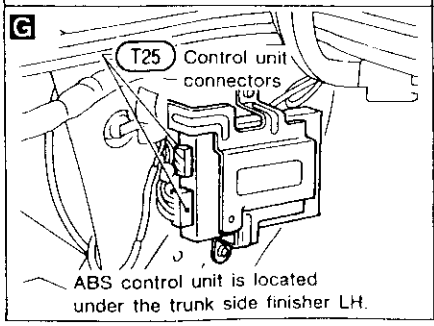

SBR011D

Preliminary Check

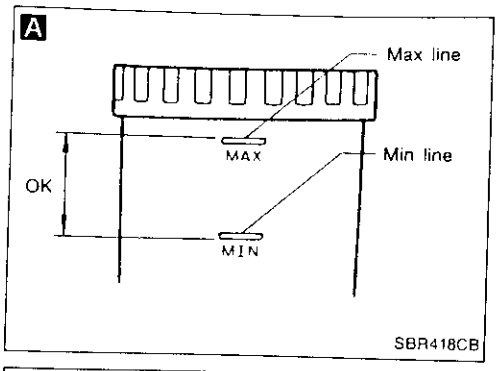

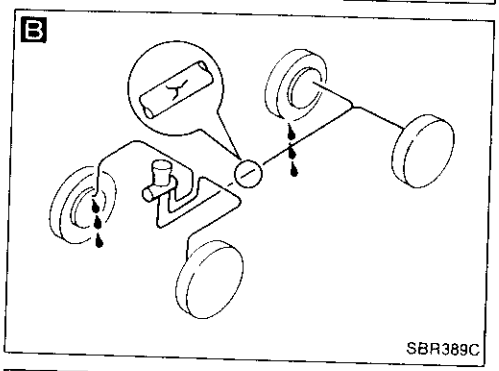

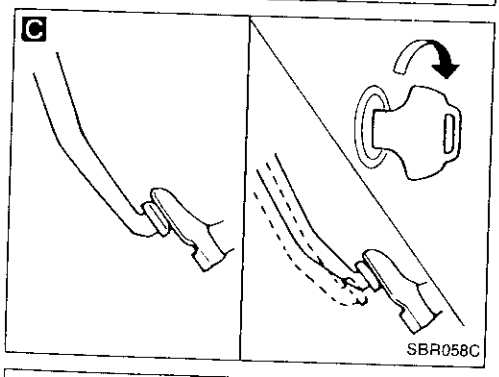

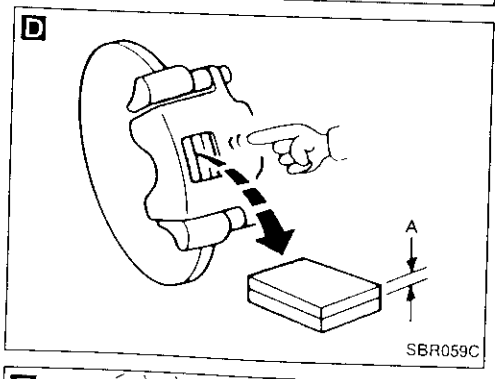

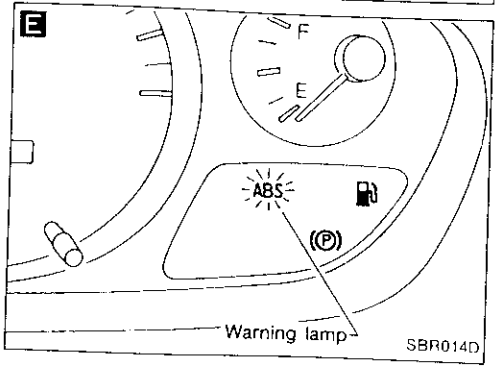

A

Check brake fluid level in reservoir tank.

Low fluid level may indicate brake pad wear or leakage from brake line.

B

Check brake line for leakage. — NG → Repair.

OK

C

Check brake booster for operation and air tightness. Refer to (BR-10). — NG → Replace.

OK

D

Check brake pads and rotor. Refer to (BR-12, 16). — NG → Replace.

OK

A

Check brake fluid level in reservoir tank again. — NG → Fill up brake fluid.

OK

E

Check warning lamp activation. When ignition switch is turned on, warning lamp turns on. — NG → Check fuse, warning lamp bulb and warning lamp circuit.

OK

Check warning lamp for deactivation after engine is started. — NG → Go to Self-diagnosis (BR-40).

OK

Drive vehicle at speeds over 15 km/h (9 MPH) for at least one minute.

Ensure warning lamp remains off while driving. — NG → Go to Self-diagnosis (BR-40).

OK

END

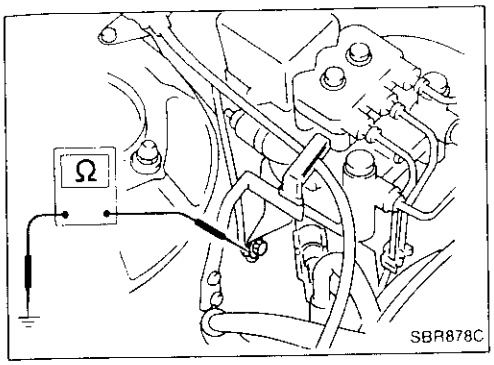

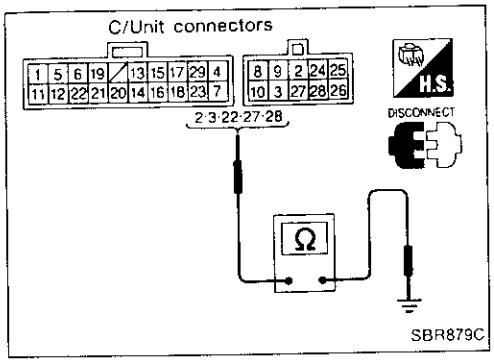

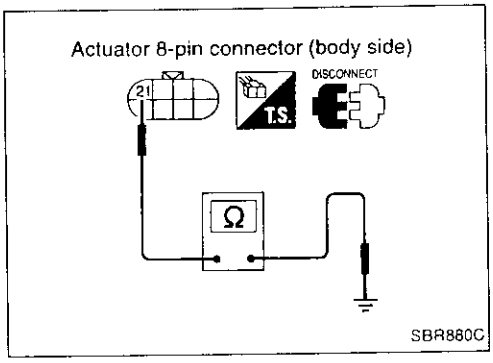

Ground Circuit Check

ACTUATOR MOTOR GROUND

Actuator motor ground is secured with actuator mounting bracket bolt.

- Check resistance between actuator motor ground terminal and body ground.
  Resistance: approximately 0Ω

CONTROL UNIT GROUND

- Check resistance between control unit connector terminals and ground.
  Resistance: approximately 0Ω

ACTUATOR GROUND

- Check resistance between actuator harness 8-pin connector (body side) terminal ㉑ and ground.
  Resistance: approximately 0Ω

Circuit Diagram for Quick Pinpoint Check

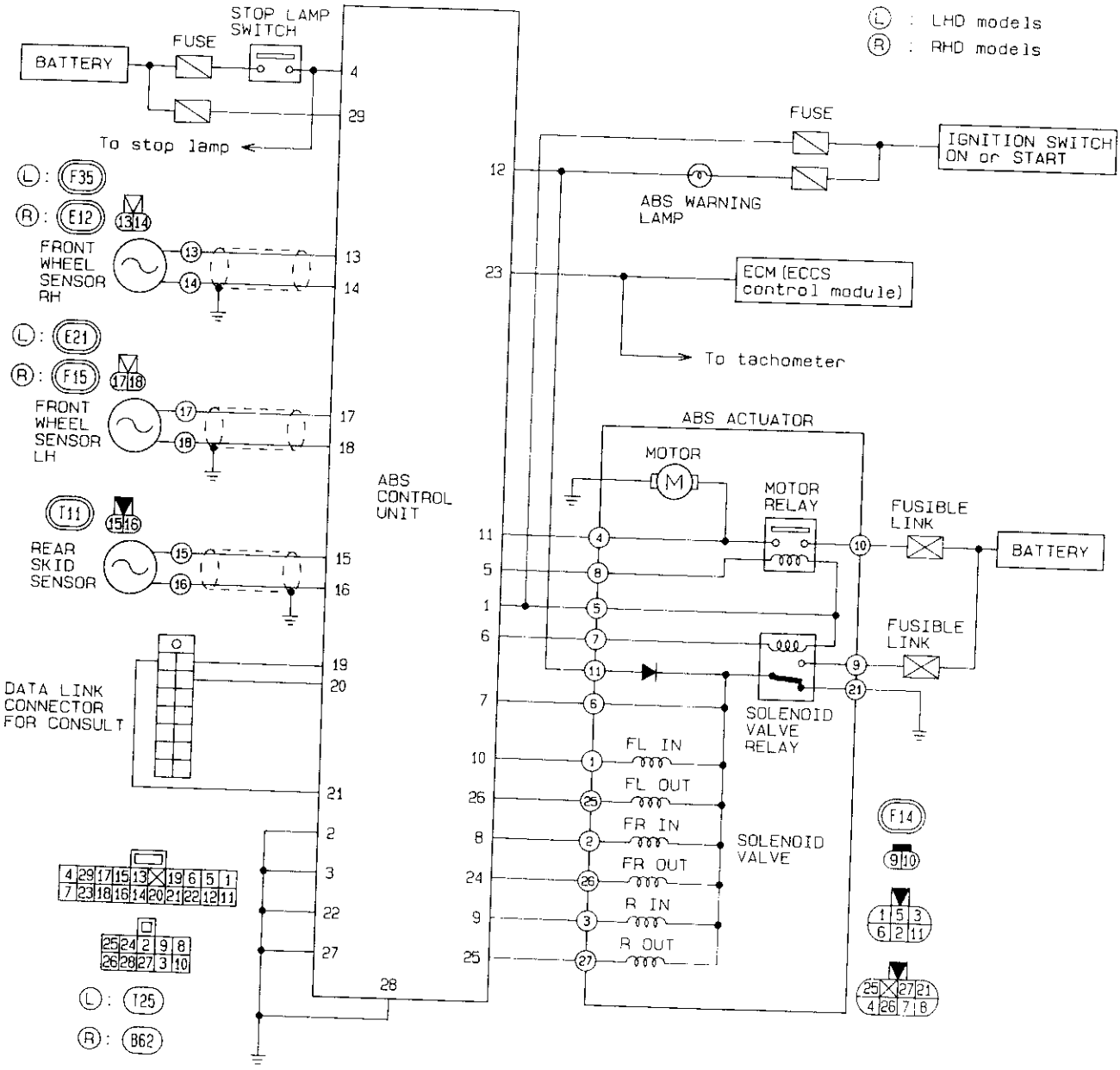

SBR999C

Diagnostic Procedure 1 (Not self-diagnostic item)

Warning lamp does not work when ignition switch is turned ON.

WARNING LAMP CIRCUIT CHECK

Check 7.5A fuse [25] for warning lamp. For fuse layout, refer to POWER SUPPLY ROUTING in EL section.

NG → Replace fuse.

OK ↓

A

- Install 7.5A fuse.
- Disconnect connectors from control unit and actuator.
- Check voltage between control unit connector terminal ⑫ and ground after turning ignition switch "ON".

Battery voltage should exist after turning ignition switch "ON".

NG → Check warning lamp bulb.

NG → Replace bulb.

OK → Repair harness and connectors between battery and control unit connector terminal ⑫ (including combination meter)

OK ↓

B

- Turn ignition switch "OFF". Disconnect actuator 6-pin connector.
- Check continuity between control unit connector terminal ⑫ and actuator 6-pin connector (body side) terminal ⑪.

Continuity should exist.

NG → Repair harness and connectors between warning lamp (combination meter) and actuator 6-pin connector (body side) terminal ⑪.

OK ↓

C

- Disconnect actuator 8-pin connector.
- Check continuity between actuator harness 8-pin connector (body side) terminal ㉑ and body ground.

Continuity should exist.

NG → Repair harness and connectors.

OK ↓

Ⓐ

(Go to next page.)

A C/Unit connector

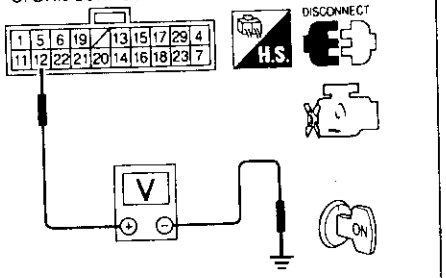

SBR891C

B C/Unit connector — Actuator 6-pin connector (body side)

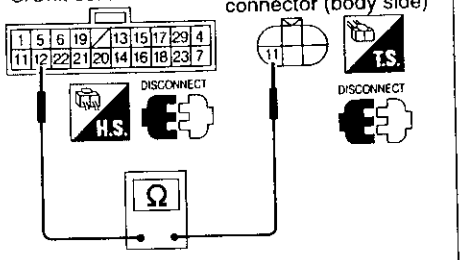

SBR881C

C Actuator 8-pin connector (body side)

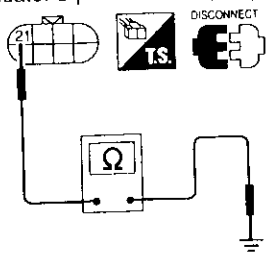

SBR882C

Diagnostic Procedure 1 (Not self-diagnostic item) (Cont'd)

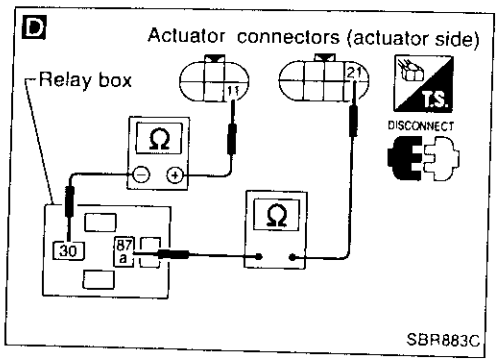

Ⓐ

D

- Disconnect solenoid valve relay.
- Check continuity between actuator connector (actuator side) terminals and solenoid valve relay box terminals.

NG → Replace actuator assembly.

Actuator	Relay box
11 ⊕	30 ⊖
21	87a

Continuity should exist.
Note: Pay attention to tester polarity*.

OK ↓

CHECK SOLENOID VALVE RELAY.

Refer to SOLENOID VALVE RELAY in Electrical Components Inspection (BR-65).

NG → Replace solenoid valve relay.

OK ↓

Go to D in Diagnostic Procedure 2.

***: Specifications may vary depending on the type of tester. Before performing this inspection, refer to the instruction manual of the tester.**

A Actuator 8-pin connector (body side)

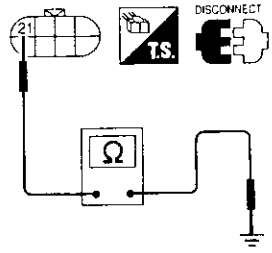

SBR882C

B C/Unit connector

Actuator 6-pin connector (body side)

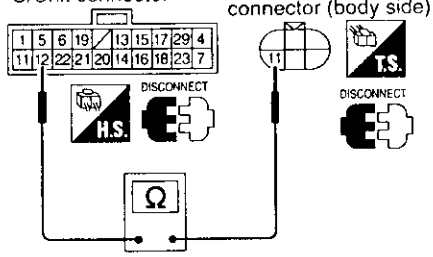

SBR881C

C Actuator 6-pin connector (actuator side)

Relay box

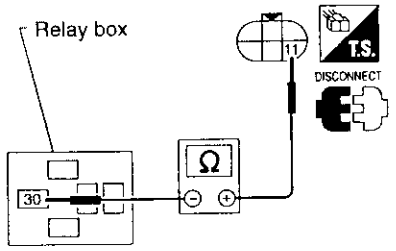

SBR884C

Diagnostic Procedure 2

CONTROL UNIT OR GROUND CIRCUIT

(Malfunction code No. 45, 46, 77, LED deactivation or continuous activation)

- Disconnect connectors from control unit and actuator. Check terminals for damage or connection. Then reconnect connectors.
- Carry out self-diagnosis again.

Does warning lamp activate again?

No → Inspection end

Yes ↓

SOLENOID VALVE RELAY CHECK

Refer to SOLENOID VALVE RELAY in Electrical Components Inspection (BR-65).

NG → Replace solenoid valve relay.

OK ↓

A

SOLENOID VALVE RELAY GROUND CIRCUIT

- Disconnect actuator 8-pin connector.
- Check continuity between actuator 8-pin connector (body side) terminal ㉑ and body ground.

Continuity should exist.

NG → Repair harness and connectors.

OK ↓

B

- Disconnect control unit connectors and actuator 6-pin connector.
- Check continuity between control unit connector terminal ⑫ and actuator 6-pin connector (body side) terminal ⑪.

Continuity should exist.

NG → Repair harness and connectors.

OK ↓

C

- Check continuity between actuator 6-pin connector (actuator side) terminal ⑪ and solenoid valve relay box terminal ㉚.

Actuator	Relay box	Continuity
11 ⊕	30 ⊖	Yes
11 ⊖	30 ⊕	No

Note: Pay attention to tester polarity*.

NG → Replace actuator assembly.

OK ↓

Ⓐ

(Go to next page.)

*: **Specifications may vary depending on the type of tester. Before performing this inspection, refer to the instruction manual of the tester.**

Diagnostic Procedure 2 (Cont'd)

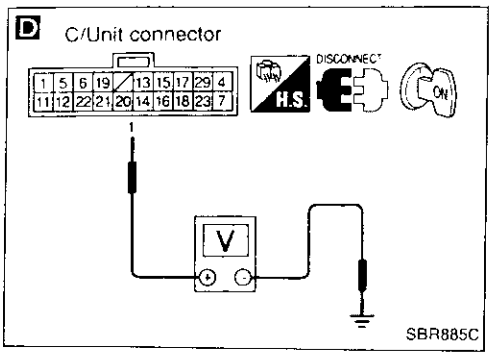

Ⓐ

D

CONTROL UNIT POWER SUPPLY CIRCUIT

- Check voltage between control unit connector terminal ① and body ground after turning ignition switch "ON".

Battery voltage should exist after turning ignition switch "ON".

NG → Check 10A fuse [1] for control unit. For fuse layout, refer to POWER SUPPLY ROUTING in EL section.

NG → Replace fuse.

OK → Repair harness and connectors.

OK

CONTROL UNIT GROUND CIRCUIT

Refer to CONTROL UNIT GROUND in Ground Circuit Check (BR-45).

NG → Repair harness and connectors.

OK

Go to Diagnostic Procedure 4 (BR-52).

OK

Replace ABS control unit.

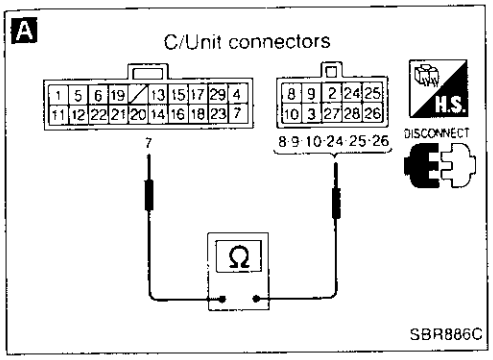

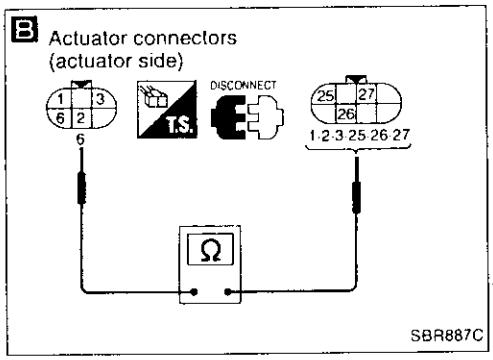

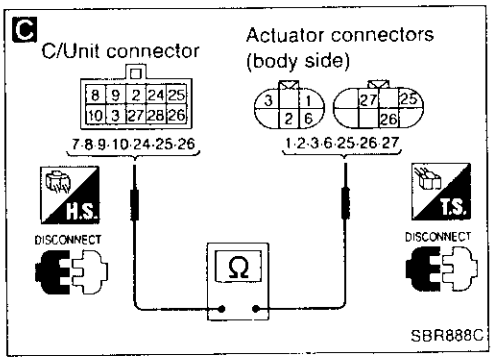

Diagnostic Procedure 3

ACTUATOR SOLENOID VALVE
(Malfunction code No. 11 - 13, 15 - 17, 21 - 23, 25 - 27)

- Disconnect connectors from control unit and actuator. Check terminals for damage or loose connection. Then reconnect connectors.
- Carry out self-diagnosis again.

Does warning lamp activate again?

No → Inspection end

Yes ↓

A

ACTUATOR SOLENOID VALVE CHECK

- Disconnect control unit connectors.
- Check resistance between control unit connector terminals.

Code No. (LED flashes.)	Terminals
11, 21	⑦ - ⑧
12, 22	⑦ - ⑩
13, 23	⑦ - ⑨
15, 25	⑦ - ㉔
16, 26	⑦ - ㉖
17, 27	⑦ - ㉕

Resistance: 3.7 - 8.0Ω

OK → Replace control unit.

NG ↓

B

- Disconnect actuator connectors.
- Check resistance between actuator connector (actuator side) terminals.

Code No. (LED flashes.)	Terminals
11, 21	⑥ - ②
12, 22	⑥ - ①
13, 23	⑥ - ③
15, 25	⑥ - ㉖
16, 26	⑥ - ㉕
17, 27	⑥ - ㉗

Resistance: 3.7 - 8.0Ω

NG → Replace actuator.

OK ↓

C

- Check continuity between control unit connector terminals and actuator connector (body side) terminals.

Code No. (LED flashes.)	Control unit	Actuator
11, 21	⑧	②
12, 22	⑩	①
13, 23	⑨	③
15, 25	㉔	㉖
16, 26	㉖	㉕
17, 27	㉕	㉗
42	⑦	⑥

Continuity should exist.

NG → Repair harness and connector.

OK ↓

Ⓐ

(Go to next page.)

Diagnostic Procedure 3 (Cont'd)

Ⓐ

- Carry out self-diagnosis again.
  Does the malfunction code No. indicate actuator solenoid valve?

Yes → Go to D in Diagnostic Procedure 2.

No → Go to applicable diagnostic procedure for malfunction code No.

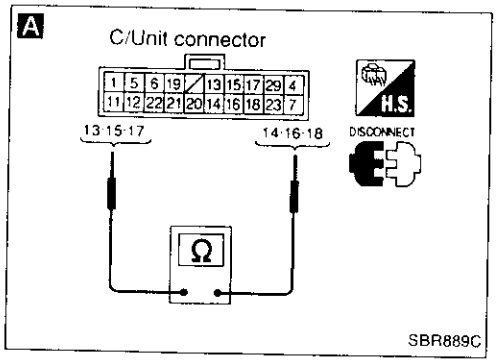

Diagnostic Procedure 4

WHEEL SENSOR OR ROTOR

(Malfunction code No. 01 - 03, 05 - 07)

- Disconnect connectors from control unit and wheel sensor of malfunction code No. Check terminals for damage or loose connection. Then reconnect connectors.
- Carry out self-diagnosis again.
  Does warning lamp activate again?

No → Inspection end

Yes

A

WHEEL SENSOR ELECTRICAL CHECK

OK → Ⓐ (See next page.)

- Disconnect control unit connector.
- Check resistance between control unit connector terminals.
  Code No. 01 or 05 (Front RH wheel)
  Terminals ⑬ and ⑭
  Code No. 02 or 06 (Front LH wheel)
  Terminals ⑰ and ⑱
  Code No. 03 or 07 (Rear wheel)
  Terminals ⑮ and ⑯
  Resistance: 0.6 - 3.3 kΩ

Note: If the result is OK, check it again while moving sensor harness.

NG

Ⓑ

(Go to next page.)

Note: Wheel position should be distinguished by code No. (LED flashes).

Diagnostic Procedure 4 (Cont'd)

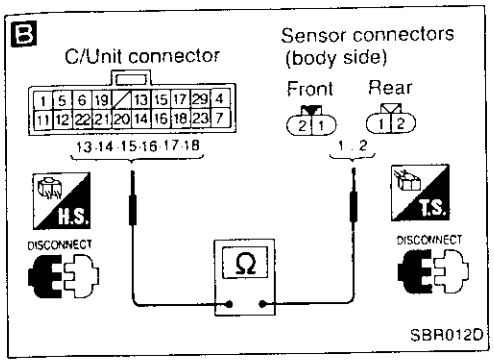

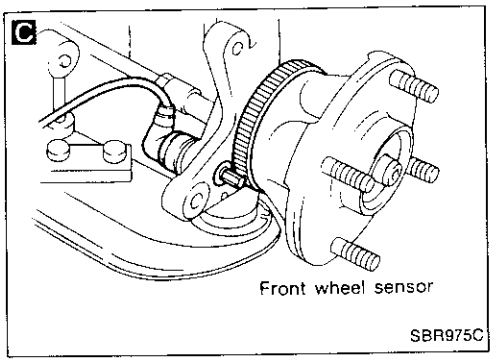

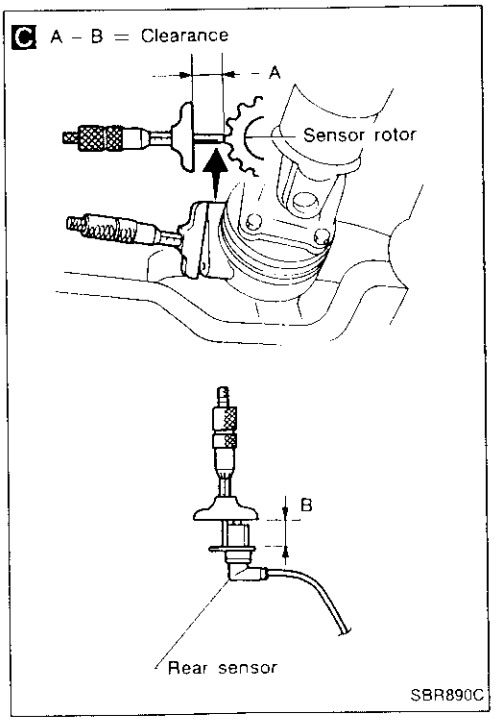

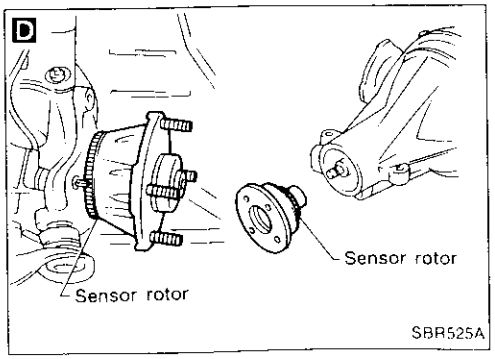

Ⓑ

B

- Disconnect wheel sensor connector
- Check continuity between control unit connector terminals and wheel sensor connector (body side) terminals.

Code No. (LED flashes.)	Control unit	Wheel sensor
01, 05 (Front RH)	⑬	①
	⑭	②
02, 06 (Front LH)	⑰	①
	⑱	②
03, 07 (Rear)	⑮	②
	⑯	①

Continuity should exist.

OK → Note: CHECK WHEEL SENSOR. Refer to WHEEL SENSOR in Electrical Components Inspection (BR-65).

NG → Note: Repair harness and connectors between control unit connector and wheel sensor connector.

Ⓐ

C Note: WHEEL SENSOR MECHANICAL CHECK

Check for any foreign materials and clearance between sensor and rotor.

Clearance:

Front

Make sure the sensor is installed of minimum clearance.

Rear

0.31 - 0.82 mm

(0.0122 - 0.0323 in)

NG → Note: Clean sensor fixing portion, reinstall or replace sensor.

OK

D Note: Check sensor rotor for teeth damage.

NG → Note: Replace sensor rotor

OK

- Carry out self-diagnosis again. **Does the malfunction code No. (LED flashes) indicate wheel sensor?**

Yes → Go to **D** in Diagnostic Procedure 2.

No → Go to applicable diagnostic procedure for malfunction code No. (LED flashes).

Note: Wheel position should be distinguished by code No. (LED flashes).

A Actuator connectors (body side)

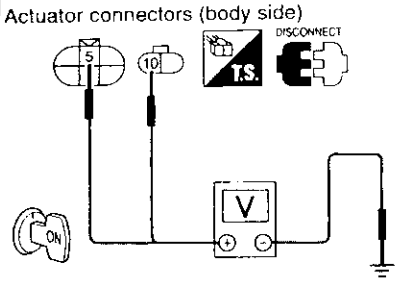

SBR892C

B

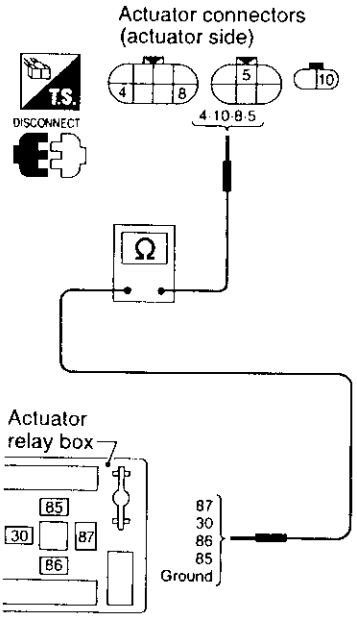

SBR893C

C Actuator connector (body side)

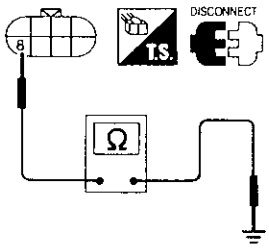

SBR900C

D

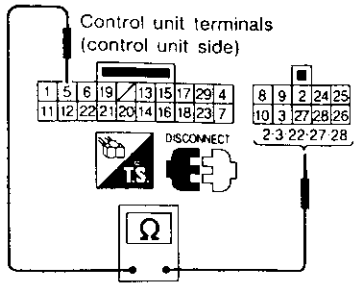

SBR901CA

Diagnostic Procedure 5

MOTOR RELAY OR MOTOR

(Malfunction code No. 43, 44)

MOTOR POWER SUPPLY CIRCUIT

- Check 30A fusible link [L] and 10A fuse [1] for actuator. For fusible link and fuse layout, refer to POWER SUPPLY ROUTING in EL section.

NG → Ⓑ (Skip page.)

OK ↓

- Disconnect connectors from control unit and actuator. Check terminals for damage or loose connection. Then reconnect connectors.
- Carry out self-diagnosis again.

Does warning light activate again?

No → Inspection end

Yes ↓

A

- Disconnect actuator connectors.
- Check voltage between connector (body side) terminals and ground.

Terminals	Ignition switch
⑤ - ground	ON position
⑩ - ground	—

Battery voltage should exist.

NG → Repair harness and connectors between battery and actuator connector (body side) terminals.

OK ↓

B

MOTOR RELAY CIRCUIT

- Remove motor relay.
- Disconnect actuator connectors.
- Check continuity between actuator connector (actuator side) terminals and relay connector terminals or body ground.

Actuator connector	Relay connector	Continuity
④	⑧⑦	Yes
⑩	③⑩	Yes
⑧	⑧⑥	Yes
⑤	⑧⑤	Yes
④	Ground	No

NG → Replace actuator assembly.

OK ↓

C

- Check continuity between actuator connector (body side) terminal ⑧ and ground.

Continuity should not exist.

OK → Ⓐ (Go to next page.)

NG ↓

D

- Disconnect control unit connectors.
- Check continuity between control unit terminals (control unit side) ⑤ and ②, ③, ㉒, ㉗, ㉘.

Continuity should not exist.

OK → Repair harness and connectors.

NG ↓

Replace control unit.

Diagnostic Procedure 5 (Cont'd)

E

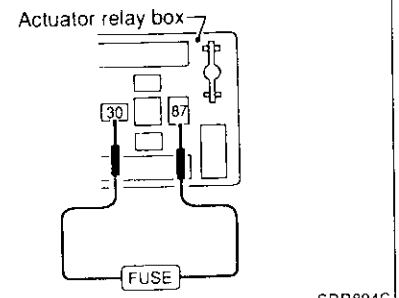

SBR894C

F

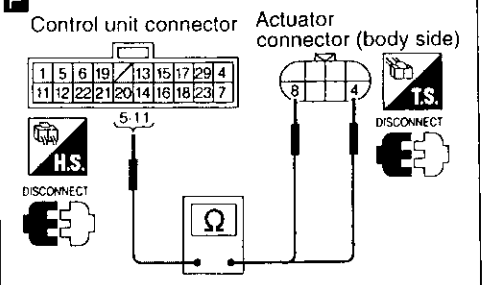

SBR895C

Ⓐ

E

MOTOR CHECK

- Connect actuator connectors.
- Connect suitable wire between relay connector terminals ⑰ and ㉚.

Motor should operate.

Do not connect wire for more than 5 seconds.

NG → Check actuator motor ground (Refer to BR-45).

NG → Repair harness and terminals.

OK → Replace actuator assembly.

OK ↓

MOTOR RELAY CHECK

Refer to MOTOR RELAY in Electrical Components Inspection (BR-65).

NG → Replace motor relay.

OK ↓

F

CIRCUIT CHECK

- Disconnect control unit connector.
- Check continuity between control unit connector terminals and actuator connector (body side) terminals.

Control unit	Actuator
⑤	⑧
⑪	④

Continuity should exist.

NG → Repair harness and connectors.

OK ↓

Go to D in Diagnostic Procedure 2.

Diagnostic Procedure 5 (Cont'd)

G Actuator connectors (body side)

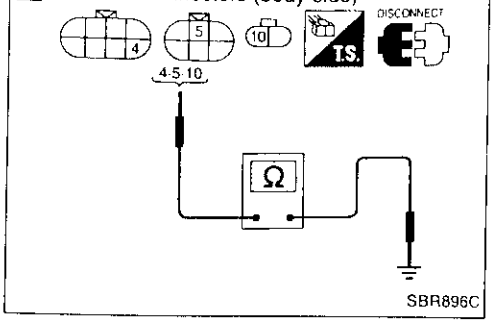

H Actuator connectors (actuator side)

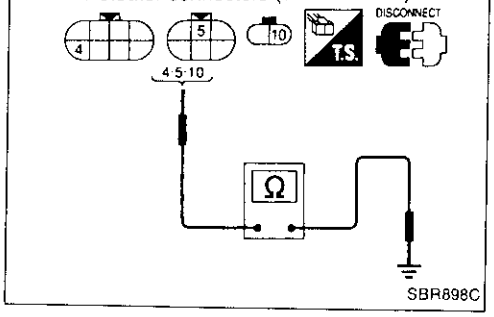

I Control unit terminals

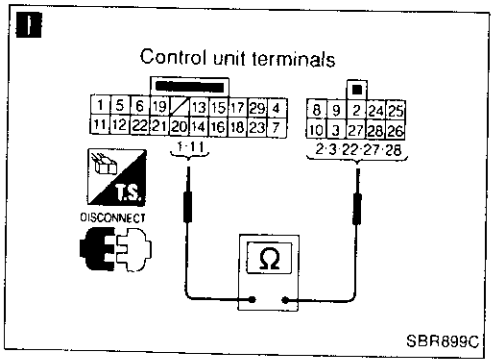

Ⓑ

- Replace fusible link or fuse.
  Is it blown out when it is replaced or ignition switch is turned "ON"?

No → Inspection end

Yes

G

MOTOR POWER SUPPLY CIRCUIT

NG → Repair harness and connector.

- Disconnect connectors from actuator and control unit.
- Check continuity between actuator connector (body side) terminals and ground.

Fuse/Fusible link	Terminals
Fusible link [L]	④ - ground ⑩ - ground
Fuse [1]	⑤ - ground

Continuity should not exist.

OK

H

- Remove motor ground.
- Check continuity between actuator connector (actuator side) terminals and ground.

NG → Replace actuator assembly.

Fuse/Fusible link	Terminals
Fusible link [L]	④ - ground ⑩ - ground
Fuse [1]	⑤ - ground

Continuity should not exist.

OK

I

- Check continuity between control unit terminals.

NG → Replace control unit.

Fuse/Fusible link	Terminals
Fusible link [L]	⑪ - ②, ③, ㉒, ㉗, ㉘
Fuse [1]	① - ②, ③, ㉒, ㉗, ㉘

Continuity should not exist.

OK

Replace actuator assembly.

A Actuator connectors (body side)

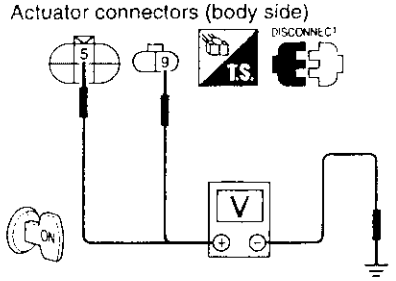

B Actuator connectors (actuator side)

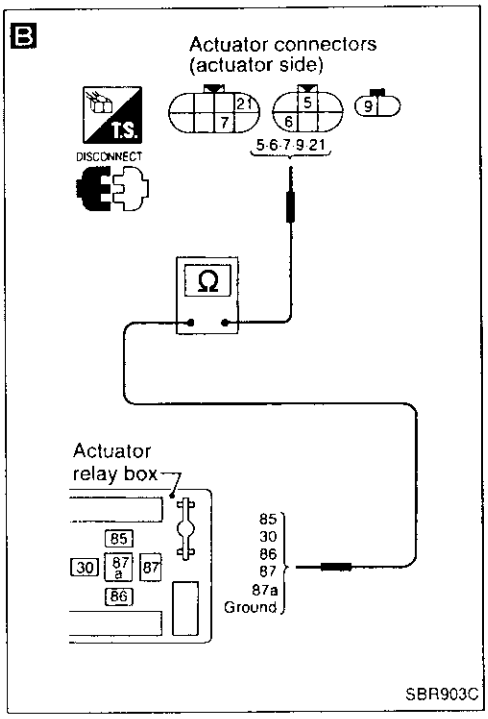

Diagnostic Procedure 6

SOLENOID VALVE RELAY

(Malfunction code No. 41, 42)

SOLENOID VALVE POWER SUPPLY CHECK

- Check 30A fusible link [K] and 10A fuse [1] for actuator. For fusible link and fuse layout, refer to POWER SUPPLY ROUTING in EL section.

NG → Ⓑ (See next page.)

OK ↓

- Disconnect connectors from control unit and actuator. Check terminals for damage or loose connection. Then reconnect connectors.
- Carry out self-diagnosis again. **Does warning lamp activate again?**

No → Inspection end

Yes ↓

A

SOLENOID VALVE POWER SUPPLY CHECK

- Disconnect connectors from actuator.
- Check voltage between actuator 2-pin connector (body side) terminals and ground.

Terminals	Ignition switch
⑤ - ground	ON position
⑨ - ground	—

Battery voltage should exist.

NG → Repair harness and connector.

OK ↓

SOLENOID VALVE RELAY CHECK

Refer to SOLENOID VALVE RELAY in Electrical Components Inspection (BR-65).

NG → Replace solenoid valve relay.

OK ↓

B

SOLENOID VALVE RELAY CIRCUIT CHECK

Check continuity between relay terminals and actuator connector (actuator side) terminals.

Relay terminals	Connector terminals	Continuity
㉚	⑥	Yes
㉗	⑨	Yes
(87a)	㉑	Yes
㊻	⑦	Yes
㉕	⑤	Yes
Ground	⑦	No

NG → Replace actuator.

OK ↓

Ⓐ

(Go to next page.)

Diagnostic Procedure 6 (Cont'd)

C

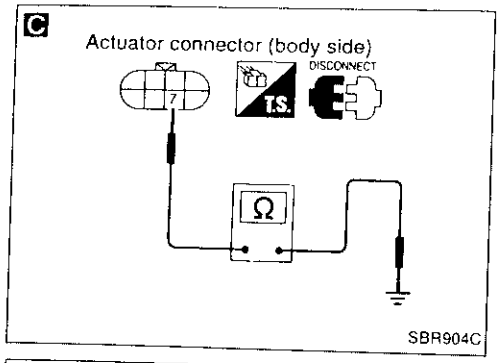

Ⓐ

C

- Check continuity between actuator connector (body side) terminal ⑦ and ground.
  Continuity should not exist.

OK → Ⓒ (See below.)

NG ↓

D

- Disconnect control unit connectors.
- Check continuity between control unit terminals (control unit side) ⑥ and ②, ③, ㉒, ㉗, ㉘.
  Continuity should not exist.

OK → Repair harness and connectors.

NG ↓

Replace control unit.

D

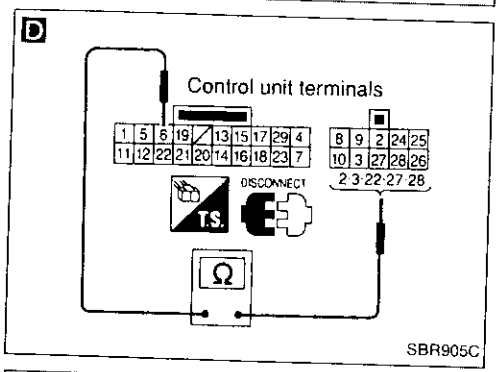

Ⓒ

E

CIRCUIT CHECK

- Disconnect control unit connector.
- Check continuity between control unit connector terminals and actuator connector (body side) terminals.

Control unit	Actuator
⑥	⑦
⑦	⑥
Ground	㉑

Continuity should exist.

NG → Repair harness and connectors.

OK ↓

Go to D in Diagnostic Procedure 2.

E

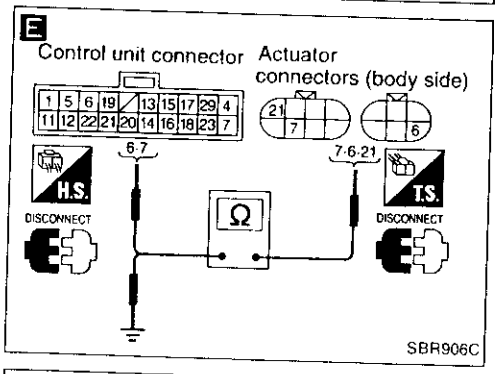

F

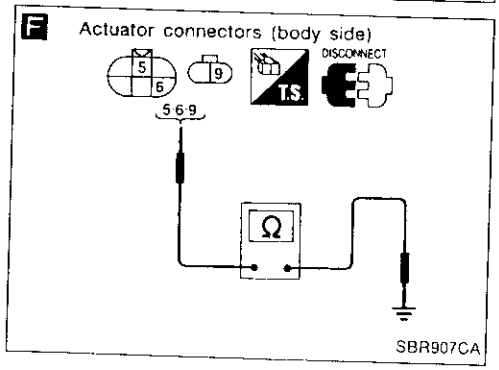

Ⓑ

- Replace fusible link or fuse.
  Is it blown out when it is replaced or ignition switch is turned "ON"?

No → Inspection end

Yes ↓

F

ACTUATOR POWER SUPPLY CIRCUIT

- Disconnect connectors from actuator and control unit.
- Check continuity between actuator connector (body side) terminals and ground.

Fuse/Fusible link	Terminals
Fusible link [K]	⑥ - ground
	⑨ - ground
Fuse [1]	⑤ - ground

Continuity should not exist.

NG → Repair harness and connector.

OK ↓

Ⓓ

(Go to next page.)

Diagnostic Procedure 6 (Cont'd)

G Actuator connectors (actuator side)

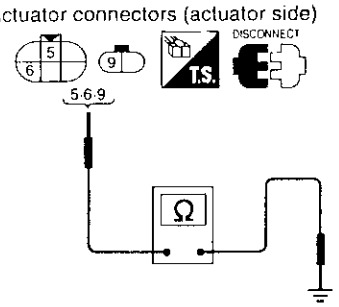

SBR908C

H Control unit terminals (control unit side)

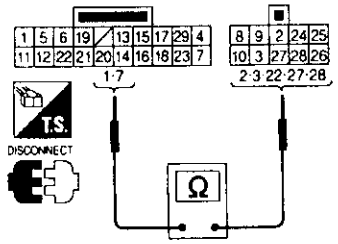

SBR909CA

Ⓓ

G

- Check continuity between actuator connector (actuator side) terminals and ground.

NG → Replace actuator assembly.

Fuse/Fusible link	Terminals
Fusible link [K]	⑥ - ground ⑨ - ground
Fuse [1]	⑤ - ground

Continuity should not exist.

OK ↓

H

- Check continuity between control unit terminals (control unit side).

NG → Replace control unit.

Fuse/Fusible link	Terminals
Fusible link [K]	⑦ - ②, ③, ㉒, ㉗, ㉘
Fuse [1]	① - ②, ③, ㉒, ㉗, ㉘

Continuity should not exist.

OK ↓

Replace actuator assembly.

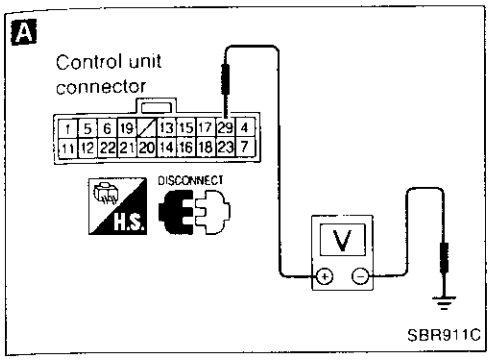

Diagnostic Procedure 8

MEMORY VOLT STOP

- Disconnect control unit connectors. Check terminals for damage or loose connection. Then reconnect connectors.
- Turn ignition switch ON and OFF more than two times
- Carry out self-diagnosis again.

Does warning lamp activate again?

No → Inspection end

Yes ↓

A

CONTROL UNIT POWER SUPPLY

- Disconnect control unit connectors.
- Check voltage between connector terminal (29) and ground.

Battery voltage should exist.

NG → Check harness and connectors between battery and control unit connector terminal (29) or 7.5A fuse [19]. For fuse layout, refer to POWER SUPPLY ROUTING in EL section.

OK ↓

CONTROL UNIT GROUND CIRCUIT

Refer to CONTROL UNIT GROUND in Ground Circuit Check (BR-45).

NG → Repair harness and connectors.

OK ↓

Replace control unit.

Note: MEMORY VOLT STOP is always indicated after disconnecting control unit connector.

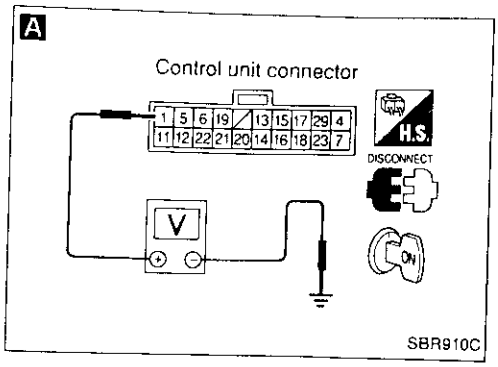

Diagnostic Procedure 7

POWER SUPPLY

(Malfunction code No. 47, 48)

- Disconnect control unit connectors. Check terminals for damage or connection. Then reconnect connectors.
- Carry out self-diagnosis again.

Does warning lamp activate again?

No → Inspection end

Yes ↓

A

CONTROL UNIT POWER SUPPLY

- Disconnect control unit connectors.
- Check voltage between connector terminal ① and ground when ignition switch is turned ON.

Battery voltage should exist.

NG → Check harness and connectors between battery and control unit connector terminal ①, 10A fuse [1] or battery. For fuse layout, refer to POWER SUPPLY ROUTING in EL section.

OK ↓

CONTROL UNIT GROUND CIRCUIT

Refer to CONTROL UNIT GROUND in Ground Circuit Check (BR-45).

NG → Repair harness and connectors.

OK ↓

Replace control unit.

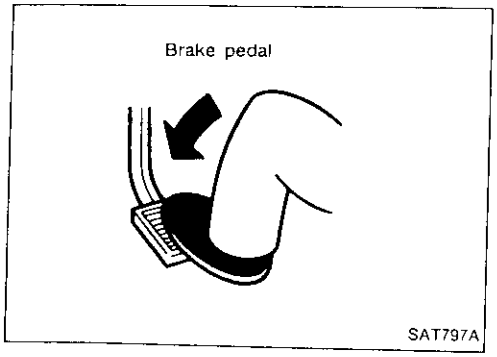

Diagnostic Procedure 9

SYMPTOM: Pedal vibration and noise

Check whether the symptom appears only when engine is started.
- Yes → Carry out self-diagnosis. (See page BR-40.)
- No ↓

Check whether the symptom appears when brake is applied gradually under the conditions below.
- Shifting
- Operating clutch
- Passing over bumps/potholes

- Yes → For such conditions, ABS will work due to difference of wheel speeds.
- No ↓

Check if there are any conditions, among those listed below, when symptom appears.
- Low friction road
- High speed cornering
- Passing over bumps/potholes

- Yes → For such conditions, ABS will work due to difference of wheel speeds.
- No ↓

Check whether the symptom appears when engine speed is over 5,000 rpm with vehicle stopped.
- Yes → Vibration related to sensor may cause ABS operation.
- No ↓

Check whether electrical equipment switches are operated.
- No → Go to B in Diagnostic Procedure 11 (BR-63).
- Yes ↓

Check wheel sensor shield ground. For location of shield ground, refer to wiring diagram and "HARNESS LAYOUT" in EL section.
- NG → Remedy.
- OK → Replace control unit.

Diagnostic Procedure 10

SYMPTOM: Long stopping distance

Check if road condition is slippery with snow or gravel.
- Yes → Stopping distance may be longer than vehicles without ABS
- No → Disconnect actuator connector and check whether stopping distance is still long.
  - No → Go to B in Diagnostic Procedure 11. (See below.)
  - Yes → Perform Prefiminary Check and air bleeding.

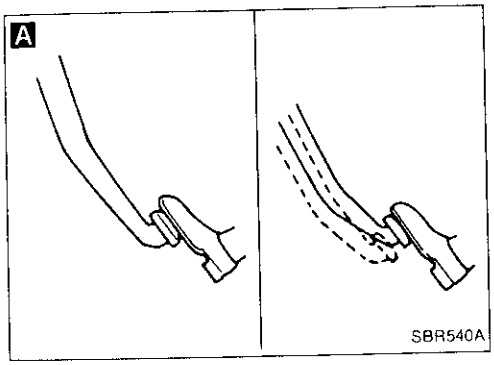

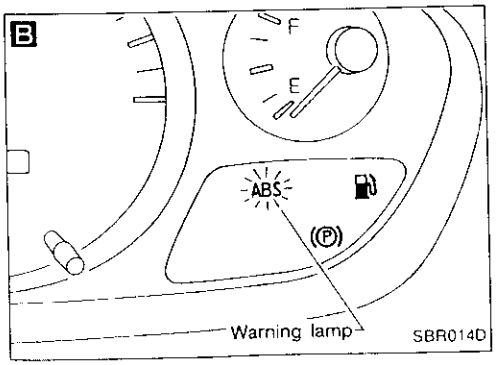

Diagnostic Procedure 11

SYMPTOM: Unexpected pedal action

A

Check whether brake pedal stroke is excessively large.
- Yes → Perform Preliminary Check (BR-44).
- No → Check that brake pedal force is firm but brake is effective.
  - Yes → Normal condition.
  - No → Disconnect actuator connector and check whether brake is effective.
    - No → Perform Preliminary Check (BR-44).
    - Yes →

B

Ensure warning lamp remains off while driving.
- NG → Carry out self-diagnosis (See page BR-40).
- OK →

CHECK WHEEL SENSOR.
- NG → Remedy.
- OK →

- Check wheel sensor connector for terminal damage or loose connection.
- Perform wheel sensor mechanical check.
  Refer to C and D in Diagnostic Procedure 4. (BR-53)

Replace control unit.

BR

Diagnostic Procedure 12

SYMPTOM: ABS does not work.

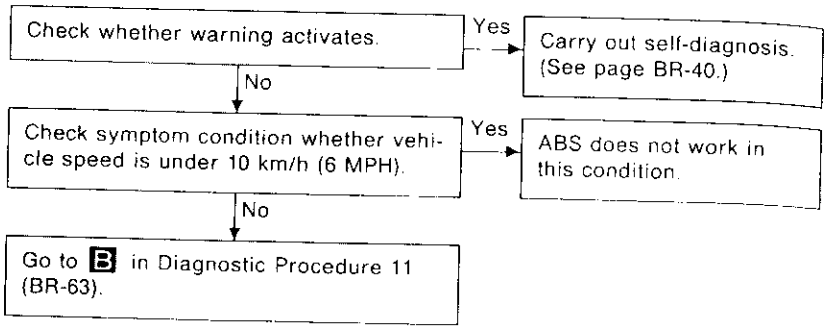

Diagnostic Procedure 13

SYMPTOM: ABS works frequently.

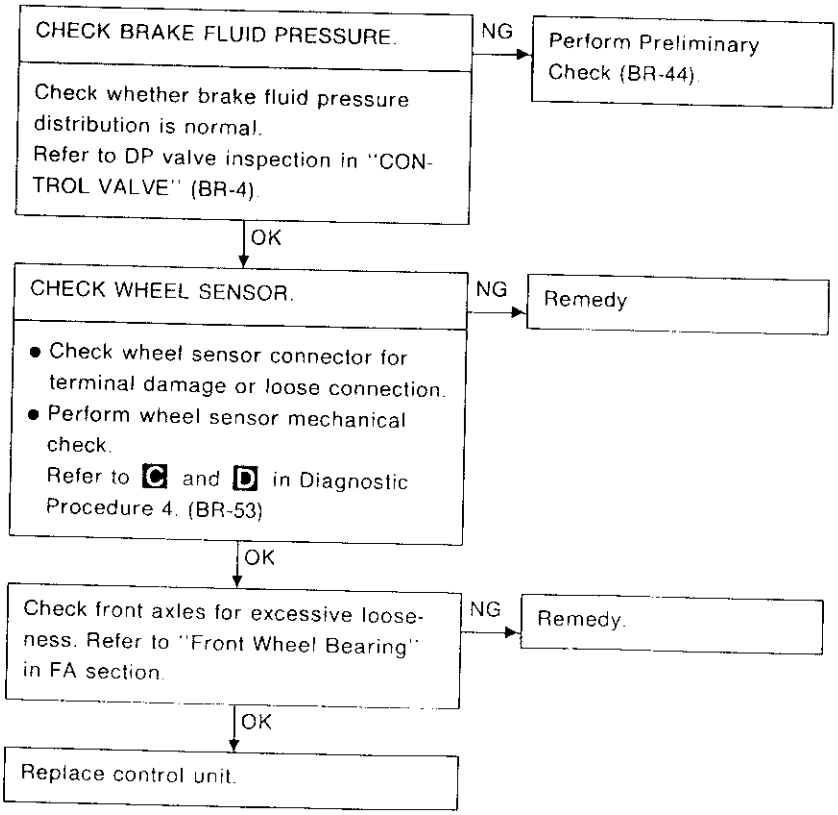

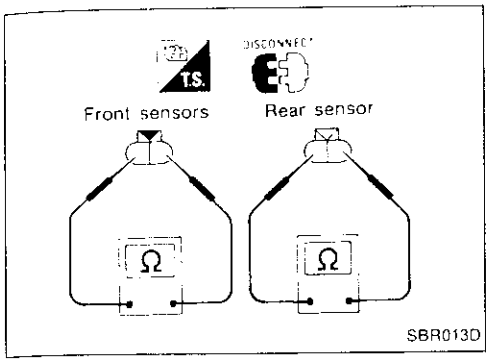

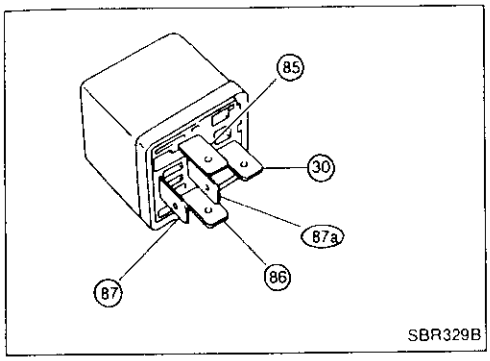

Electrical Components Inspection

WHEEL SENSOR

Check resistance for each sensor.

Resistance: 0.6 - 3.3 kΩ

ACTUATOR MOTOR RELAY AND SOLENOID VALVE RELAY

	Solenoid valve relay	Actuator motor relay solenoid valve relay
Condition	Continuity existence between terminals 30 and 87a	Continuity existence between terminals 30 and 87
Battery voltage not applied between terminals 85 and 86.	Yes	No
Battery voltage applied between terminals 85 and 86.	No	Yes

General Specifications

Front brake	
Brake model	OPF25V disc brake
Cylinder bore diameter mm (in)	40.4 (1.59) x 2
Pad mm (in) Length x width x thickness	116.0 x 50.0 x 10.0 (4.57 x 1.969 x 0.394)
Rotor outer diameter x thickness mm (in)	280 x 30 (11.02 x 1.18)
Rear brake	
Brake model	CL11H disc brake
Cylinder bore diameter mm (in)	38.18 (1.5031)
Pad mm (in) Length x width x thickness	75.0 x 40.0 x 9.5 (2.953 x 1.575 x 0.374)
Rotor outer diameter x thickness mm (in)	258 x 9 (10.16 x 0.35)

	Without ABS	With ABS
Master cylinder		
Cylinder bore diameter mm (in)	23.81 (15/16)	25.40 (1)
Control valve		
Valve model	Proportioning valve (built into master cylinder)	
Split point kPa (bar, kg/cm^2, psi) x reducing ratio	3,923 (39.2, 40, 569) x 0.4	
Brake booster		
Booster model	M23 or G23	M195T
Diaphragm diameter mm (in)	230 (9.06)	Primary: 205 (8.07) Secondary: 180 (7.09)
Recommended brake fluid		
For Europe*	DOT3 or DOT4	
Except for Europe	DOT 3	

*For Europe, never mix different type brake fluids (DOT3 and DOT4).

Inspection and Adjustment

DISC BRAKE

Brake model	OPF25V	CL11H
Pad wear limit mm (in) Minimum thickness	2.0 (0.079)	
Rotor repair limit mm (in) Minimum thickness	28 (1.10)	8 (0.31)

PARKING BRAKE

Type	Center lever
Number of notches [under force of 196 N (20 kg, 44 lb)]	7 - 9
Number of notches when warning lamp switch comes on	1

BRAKE PEDAL

Vehicle model	LHD	RHD
Free height "H" mm (in)		
M/T	181 - 191 (7.13 - 7.52)	179 - 189 (7.05 - 7.44)
A/T	191 - 201 (7.52 - 7.91)	189 - 199 (7.44 - 7.83)
Depressed height "D" mm (in) [under force of 490 N (50 kg, 110 lb) with engine running]	110 (4.33)	
Clearance "C" between pedal stopper and threaded end of stop lamp switch or ASCD switch mm (in)	0.3 - 1.0 (0.012 - 0.039)	

STEERING SYSTEM

SECTION ST

CONTENTS

PRECAUTIONS AND PREPARATION 2
Precautions 2
Special Service Tools 2
Commercial Service Tools 3
ON-VEHICLE SERVICE 5
Checking Steering Wheel Play 5
Checking Neutral Position on Steering Wheel 5
Front Wheel Turning Angle 5
Checking Gear Housing Movement 6
Adjusting Rack Retainer 6
Checking and Adjusting Drive Belts (For power steering) 6
Checking Fluid Level 6
Checking Fluid Leakage 6
Bleeding Hydraulic System 7
Checking Steering Wheel Turning Force (For power steering) 7
Checking Hydraulic System 8
STEERING WHEEL AND STEERING COLUMN 9
Removal and Installation 9
Disassembly and Assembly 12
Inspection 13
POWER STEERING GEAR AND LINKAGE (Model PR24AC) 14
Removal and Installation 14
Disassembly and Assembly 16
Disassembly 17
Inspection 17
Assembly 18
Adjustment 22
POWER STEERING OIL PUMP 24
Disassembly and Assembly 24
Pre-disassembly Inspection 24
Disassembly 25
Inspection 25
Assembly 26
SERVICE DATA AND SPECIFICATIONS (SDS) 27
General Specifications 27
Inspection and Adjustment 27

Precautions

SUPPLEMENTAL RESTRAINT SYSTEM (SRS) "AIR BAG" AND "SEAT BELT PRE-TENSIONER"

The Supplemental Restraint System "Air Bag" and "Seat belt pre-tensioner", used along with a seat belt, help to reduce the risk or severity of injury to the driver and front passenger in a frontal collision. The Supplemental Restraint System consists of air bag modules (located in the center of the steering wheel and on the instrument panel on the passenger side), seat belt pre-tensioner, a diagnosis sensor unit, warning lamp, wiring harness and spiral cable. Information necessary to service the system safely is included in the **RS section** of this Service Manual.

WARNING:

- **To avoid rendering the SRS inoperative, which could increase the risk of personal injury or death in the event of a collision which would result in air bag inflation, all maintenance must be performed by an authorized NISSAN dealer.**
- **Improper maintenance, including incorrect removal and installation of the SRS, can lead to personal injury caused by unintentional activation of the system.**
- **All SRS electrical wiring harnesses and connectors are covered with yellow outer insulation. Do r use electrical test equipment on any circuit related to the SRS.**

STEERING SYSTEM

- **Before disassembly, thoroughly clean the outside of the unit.**
- **Disassembly should be done in a clean work area. It is important to prevent the internal parts from becoming contaminated by dirt or other foreign matter.**
- **Place disassembled parts in order, on a parts rack, for easier and proper assembly.**
- **Use nylon cloths or paper towels to clean the parts; common shop rags can leave lint that might interfere with their operation.**
- **Before inspection or reassembly, carefully clean all parts with a general purpose, non-flammable solvent.**
- **Before assembly, apply a coat of recommended ATF* to hydraulic parts. Vaseline may be applied to O-rings and seals. Do not use any grease.**
- **Replace all gaskets, seals and O-rings. Avoid damaging O-rings, seals and gaskets during installation. Perform functional tests whenever designated.**

*: **Automatic transmission fluid**

Special Service Tools

Tool number Tool name	Description	
KV48100700 Torque adapter	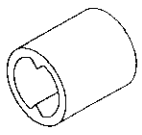 NT169	Measuring pinion rotating torque
ST27180001 Steering wheel puller	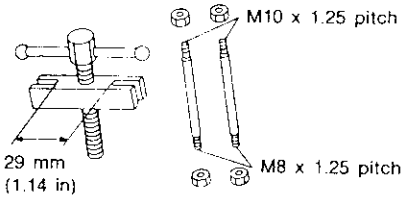 NT544	Removing and installing steering wheel

Special Service Tools (Cont'd)

Tool number Tool name	Description	
HT72520000 Ball joint remover	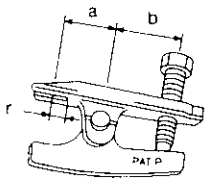 NT546	Removing ball joint a: 33 mm (1.30 in) b: 50 mm (1.97 in) r: R11.5 mm (0.453 in)
ST27091000 Pressure gauge	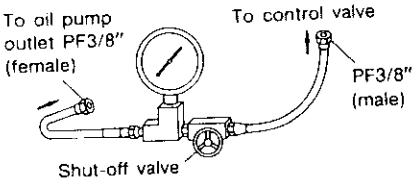 NT547	Measuring oil pressure
KV48102500 Pressure gauge adapter	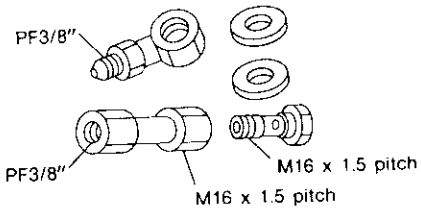 NT542	Measuring oil pressure
ST3127S000 ① GG91030000 Torque wrench ② HT62940000 Socket adapter ③ HT62900000 Socket adapter	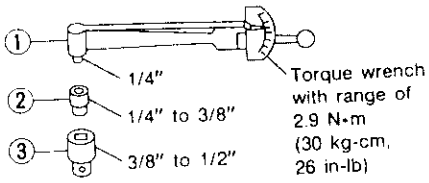 NT541	Measuring turning torque
KV48104400 Rack seal ring reformer	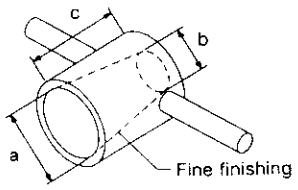 NT550	Reforming teflon ring a: 50 mm (1.97 in) dia. b: 36 mm (1.42 in) dia. c: 100 mm (3.94 in)

Commercial Service Tools

Tool name	Description	
Rear oil seal drift	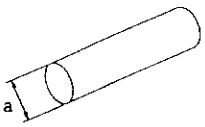 NT063	Installing rear oil seal a: 28 mm (1.10 in) dia.

Commercial Service Tools (Cont'd)

Tool name	Description
Pinion oil seal drift	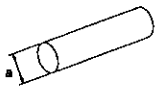 NT063 — Installing pinion oil seal a: 40 mm (1.57 in) dia.
Oil pump attachment	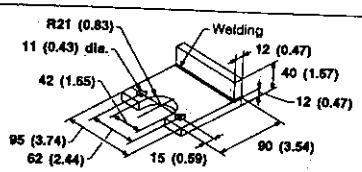 NT179 — Disassembling and assembling oil pump

Unit: mm (in)

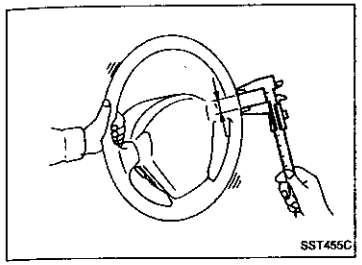
SST455C

Checking Steering Wheel Play

1. With wheels in a straight-ahead position, check steering wheel play.
   Steering wheel play:
   35 mm (1.38 in) or less
2. If it is not within specification, check the following for loose or worn components.
   Steering gear assembly
   Steering column
   Front suspension and axle

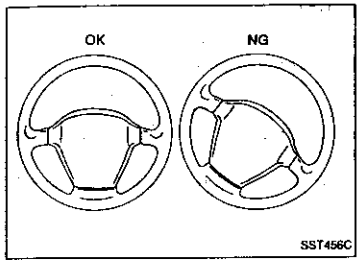

SST456C

Checking Neutral Position on Steering Wheel

Pre-checking

- Make sure that wheel alignment is correct.
  Wheel alignment:
  Refer to SDS in FA section.
- Verify that the steering gear is centered before removing the steering wheel.

Checking

- Check that the steering wheel is in the neutral position when driving straight ahead.
- If it is not in the neutral position, remove the steering wheel and reinstall it correctly.
- If the neutral position is between two teeth, loosen tie-rod lock nuts. Turn the tie-rods by the same amount in opposite directions on both left and right sides.

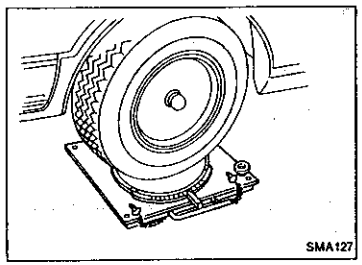
SMA127

Front Wheel Turning Angle

- Rotate steering wheel all the way right and left; measure turning angle.
  Turning angle of full turns:
  Refer to SDS in FA section.

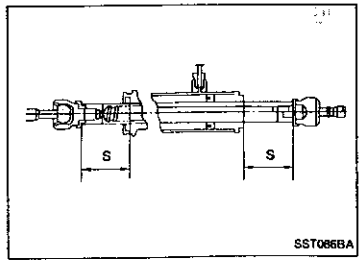

SST086BA

- If it is not within specification, check rack stroke.
  Measured length "S":
  Refer to SDS (ST-27).

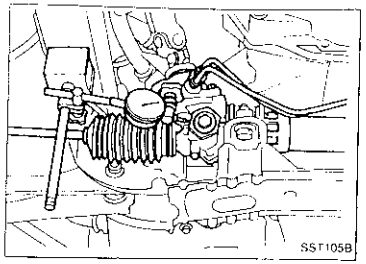
SST105B

Checking Gear Housing Movement

1. Check the movement of steering gear housing during stationary steering on a dry paved surface.
- Apply a force of 49 N (5 kg, 11 lb) to steering wheel to check the gear housing movement.
  Turn off ignition key while checking.
  Movement of gear housing:
  ±2 mm (±0.08 in) or less
2. If movement exceeds the limit, replace mount insulator after confirming proper installation of gear housing clamps.

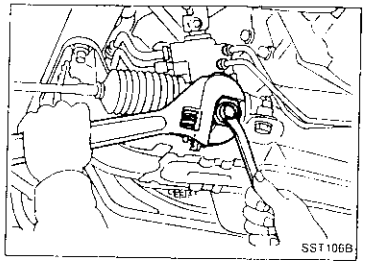
SST106B

Adjusting Rack Retainer

- Perform this driving test on a flat road.
1. Check whether vehicle moves in a straight line when steering wheel is released.
2. Check whether steering wheel returns to neutral position when steering wheel is released from a slightly turned (approx. 20°) position.
- If any abnormality is found, correct it by resetting adjusting screw.

Checking and Adjusting Drive Belts (For power steering)

Refer to Drive Belt Inspection in MA section.

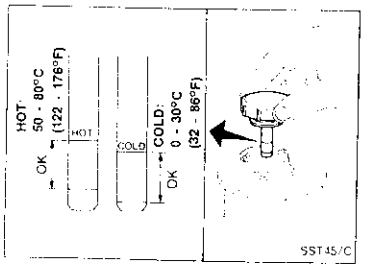

SST145C

Checking Fluid Level

Check fluid level with dipstick on reservoir cap.
Use "HOT" range for fluid temperatures of 50 to 80°C (122 to 176°F).
Use "COLD" range for fluid temperatures of 0 to 30°C (32 to 86°F).
CAUTION:
- **Do not overfill.**
- **Recommended fluid is Automatic Transmission Fluid "DEXRON™" type or equivalent.**

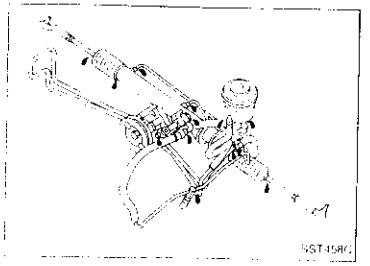
SST458C

Checking Fluid Leakage

Check the lines for improper attachment and for leaks, cracks, damage, loose connections, chafing or deterioration
1. Run engine at idle speed or 1,000 rpm.
Make sure temperature of fluid in oil tank rises to 60 to 80°C (140 to 176°F).
2. Turn steering wheel right-to-left several times.
3. Hold steering wheel at each "lock" position for five seconds and carefully check for fluid leakage

Checking Fluid Leakage (Cont'd)

CAUTION:
Do not hold the steering wheel in a locked position for more than 15 seconds.
4. If fluid leakage at connectors is noticed, loosen flare nut and then retighten.
Do not overtighten connector as this can damage O-ring, washer and connector.

Bleeding Hydraulic System

1. Raise front end of vehicle until wheels clear ground.
2. Add fluid into oil tank to specified level. Then, quickly turn steering wheel fully to right and left and lightly touch steering stoppers.
   Repeat steering wheel operation until fluid level no longer decreases.
3. Start engine.
   Repeat step 2 above.
- Incomplete air bleeding will cause the following to occur. When this happens, bleed air again.

a. Air bubbles in reservoir tank
b. Clicking noise in oil pump
c. Excessive buzzing in oil pump

Fluid noise may occur in the valve or oil pump. This is common when the vehicle is stationary or while turning the steering wheel slowly. This does not affect the performance or durability of the system

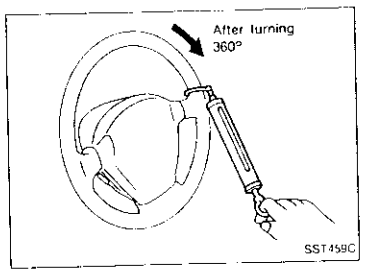

SST459C

Checking Steering Wheel Turning Force (For power steering)

1. Park vehicle on a level, dry surface and set parking brake.
2. Start engine.
3. Bring power steering fluid up to adequate operating temperature. [Make sure temperature of fluid is approximately 60 to 80°C (140 to 176°F).]
Tires need to be inflated to normal pressure.
4. Check steering wheel turning force when steering wheel has been turned 360° from the neutral position.
   Steering wheel turning force:
   39 N (4 kg, 9 lb) or less
5. If steering wheel turning force is out of specification, check rack sliding force.

a. Disconnect steering column lower joint and knuckle arms from the gear.
b. Start and run engine at idle to make sure steering fluid has reached normal operating temperature.
c. Pull tie-rod slowly to move it from neutral position to ± 11.5 mm (±0.453 in) at speed of 3.5 mm (0.138 in)/s. Check that rack sliding force is within specification.

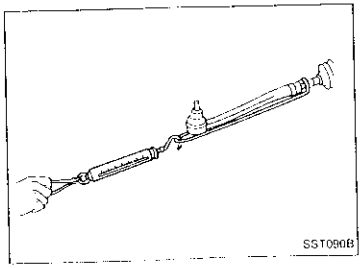
SST090B

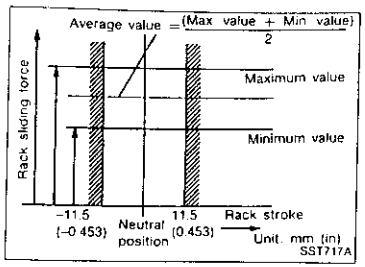

Checking Steering Wheel Turning Force (For power steering) (Cont'd)

Average rack sliding force:
186 - 245 N (19 - 25 kg, 42 - 55 lb)
Maximum force deviation:
98 N (10 kg, 22 lb)

6. If rack sliding force is not within specification, overhaul steering gear assembly.

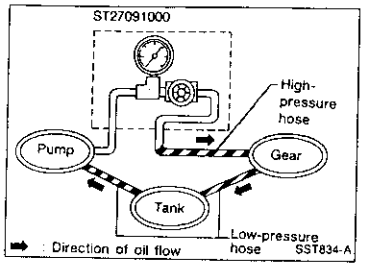

Checking Hydraulic System

Before starting, check belt tension, driving pulley and tire pressure.

1. Set Tool. Open shut-off valve. Then bleed air. (See "Bleeding Hydraulic System", ST-7.)
2. Run engine.

Make sure temperature of fluid in tank rises to 60 to 80°C (140 to 176°F).

WARNING:

Warm up engine with shut-off valve fully opened. If engine is started with shut-off valve closed, fluid pressure in oil pump increases to maximum. This will raise oil temperature abnormally.

3. Check pressure with steering wheel fully turned to left and right positions with engine idling at 1,000 rpm.

CAUTION:

Do not hold the steering wheel in a locked position for more than 15 seconds.

Oil pump maximum pressure:
8,630 - 9,219 kPa (86.3 - 92.2 bar, 88 - 94 kg/cm², 1,251 - 1,337 psi)

4. If oil pressure is below the standard pressure, slowly close shut-off valve and check pressure.
- When pressure reaches standard pressure, gear is damaged.
- When pressure remains below standard pressure, pump is damaged.

CAUTION:

Do not close shut-off valve for more than 15 seconds.

5. If oil pressure is higher than standard pressure, check oil pump flow control valve.
6. After checking hydraulic system, remove Tool and add fluid as necessary. Then completely bleed air out of system.

Removal and Installation

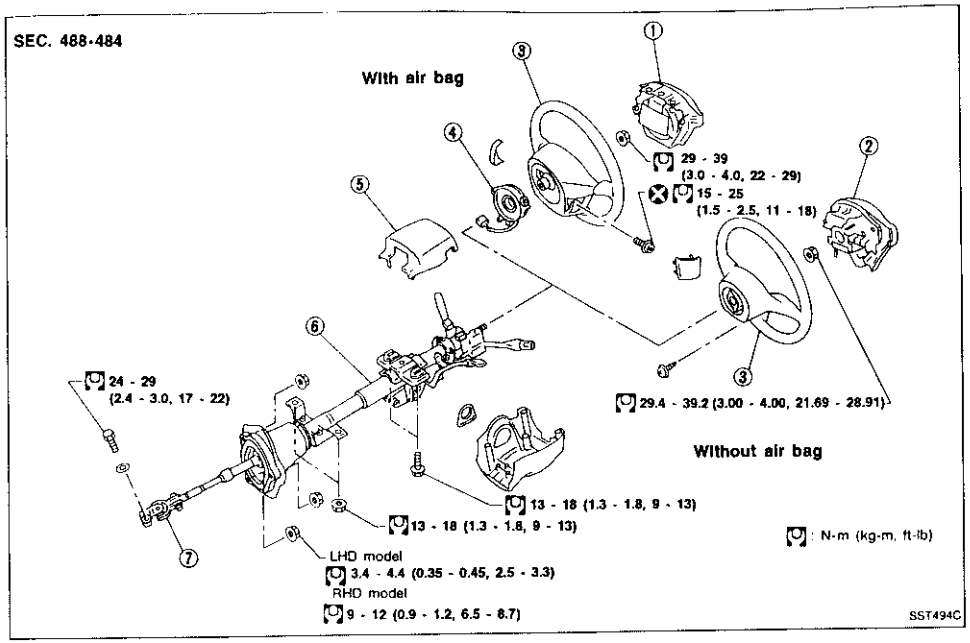

① Air bag module
② Horn pad
③ Steering wheel
④ Spiral cable
⑤ Column cover
⑥ Steering column assembly
⑦ Lower joint

CAUTION:

- **The rotation of the spiral cable (SRS "Air bag" component part) is limited. If the steering gear must be removed, set the front wheels in the straight-ahead direction. Do not rotate the steering column while the steering gear is removed.**
- **Remove the steering wheel before removing the steering lower joint to avoid damaging the SRS spiral cable.**

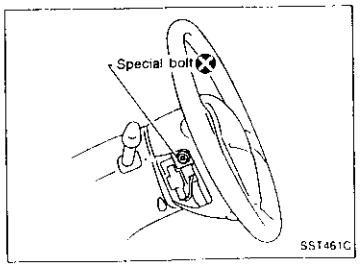

STEERING WHEEL

— With air bag type —

- Remove air bag module and spiral cable. Refer to "Removal — Air Bag Module and Spiral Cable", "SUPPLEMENTAL RESTRAINT SYSTEM" in RS section.

Removal and Installation (Cont'd)

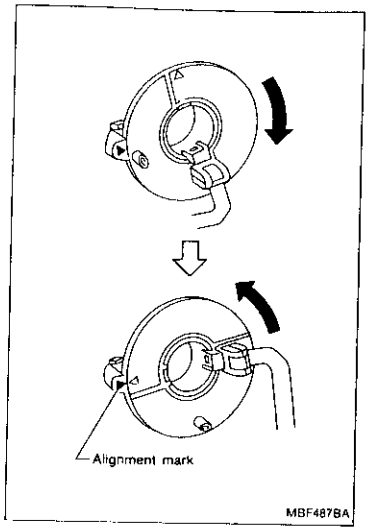

- Align spiral cable correctly when installing steering wheel.
a. Set the front wheels in the straight-ahead position.
b. Make sure that the spiral cable is in the neutral position. The neutral position is detected by turning left 2.5 revolutions from the right end position. Align the two marks (▼).

CAUTION:
The spiral cable may snap due to steering operation if the cable is installed in an improper position.
Also, with the steering linkage disconnected, the cable may snap by turning the steering wheel beyond the limited number of turns. (The spiral cable can be turned up to 2.5 turns from the neutral position to both the right and left.)

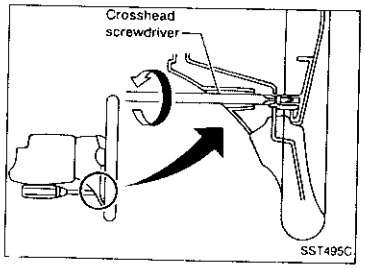

— Without air bag type —

- Remove horn pad.
Insert a crosshead screwdriver into hole on lower side of spoke and remove screw. Lift horn pad off by hand.

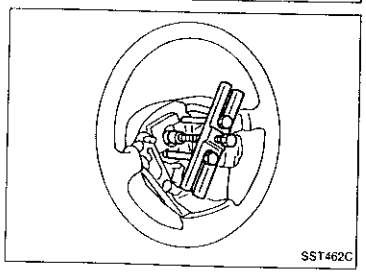

- Remove steering wheel with Tool.

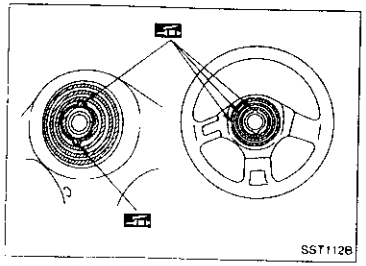

- When installing steering wheel, lubricate with multi-purpose grease. Apply grease to entire surface of turn signal cancel pins and horn contact slip rings.

Removal and Installation (Cont'd)

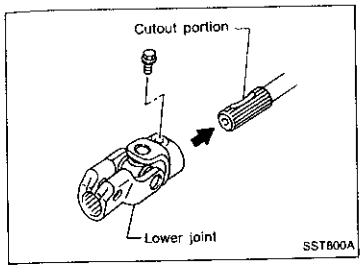

STEERING COLUMN

- When installing steering column, fingertighten all lower bracket and clamp retaining bolts; then tighten them securely. Do not apply undue stress to steering column.
- When attaching coupling joint, be sure tightening bolt faces cutout portion.

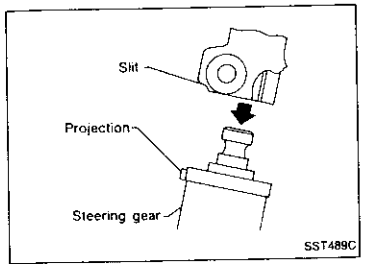

- Align slit of lower joint with projection on dust cover. Insert joint until it stops.

CAUTION:
After installation, turn steering wheel to make sure it moves smoothly. Ensure the number of turns are the same from the straight forward position to left and right locks. Be sure that the steering wheel is in a neutral position when driving straight ahead.

Disassembly and Assembly

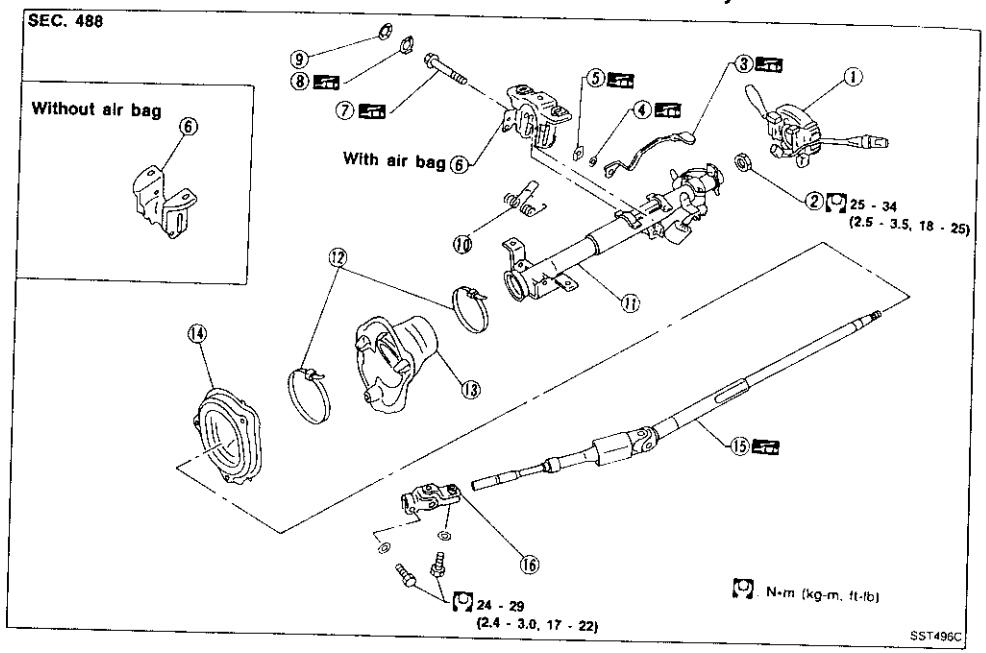

① Combination switch
② Lock nut
③ Tilt lever
④ Washer
⑤ Tilt lever stopper
⑥ Steering column mounting bracket
⑦ Adjust bolt
⑧ Adjust bolt stopper
⑨ Push nut
⑩ Tilt spring (Air bag model)
⑪ Jacket tube assembly
⑫ Band
⑬ Jacket tube bracket insulator
⑭ Hole cover
⑮ Steering column shaft
⑯ Lower joint

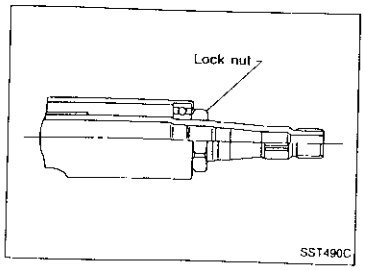

- When disassembling and assembling, unlock steering lock with key.
- Install lock nut on steering column shaft and tighten the nut to specification.

: 25 - 34 N·m (2.5 - 3.5 kg-m, 18 - 25 ft-lb)

Disassembly and Assembly (Cont'd)

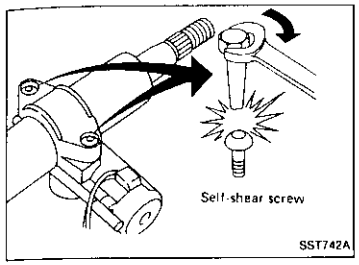

- Steering lock

a. Break self-shear type screws with a drill or other appropriate tool.
b. Install new self-shear type screws and then cut off self-shear type screw heads.

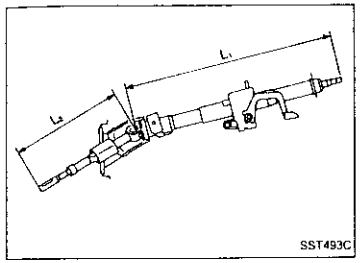

Inspection

- When steering wheel does not turn smoothly, check the steering column as follows and replace damaged parts.

a. Check column bearings for damage or unevenness. Lubricate with recommended multi-purpose grease or replace steering column as an assembly, if necessary.
b. Check steering column lower shaft for deformation or breakage. Replace if necessary.

- When the vehicle comes into a light collision, check length "L_1" and "L_2".

Steering column length "L_1":
LHD model 630.7 mm (24.83 in)
RHD model 610.0 mm (24.02 in)
Steering column lower shaft length "L_2":
LHD model 323.7 mm (12.74 in)
RHD model 341.0 mm (13.43 in)

if out of the specifications, replace steering column as an assembly.

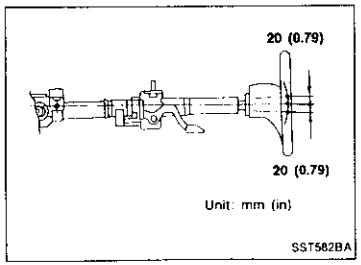

- **Tilt mechanism**

After installing steering column, check tilt mechanism operation.

Removal and Installation

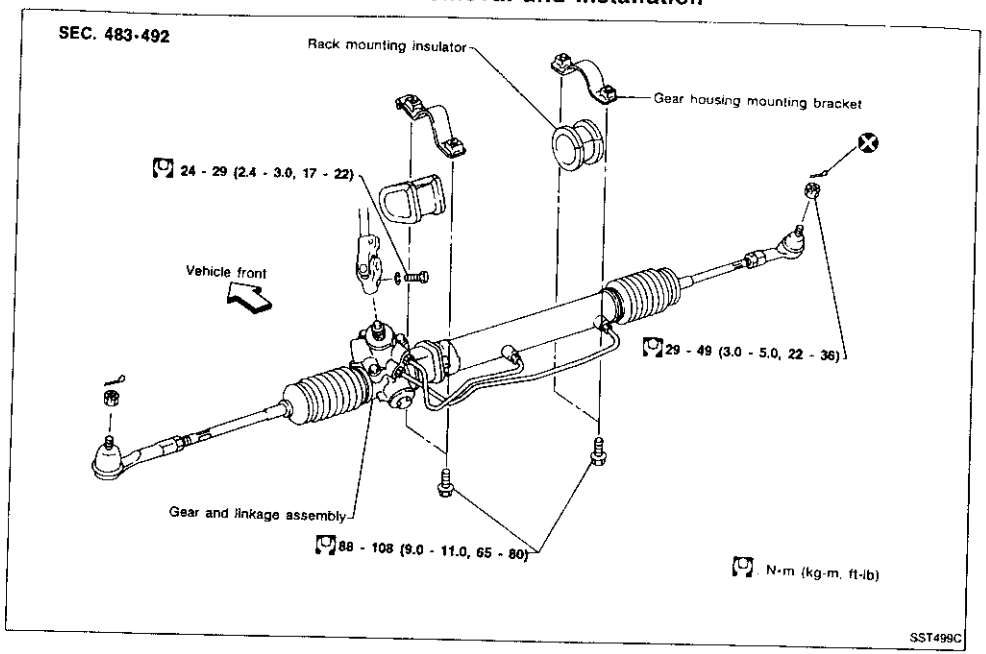

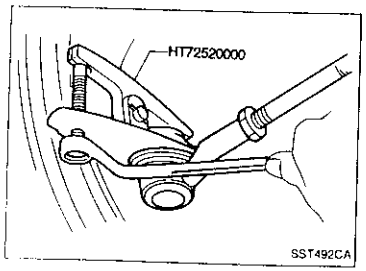

CAUTION:

- **The rotation of the spiral cable (SRS "Air bag" component part) is limited. If the steering gear must be removed, set the front wheels in the straight-ahead direction. Do not rotate the steering column while the steering gear is removed.**
- **Remove the steering wheel before removing the steering lower joint to avoid damaging the SRS spiral cable.**
- Detach tie-rod outer sockets from knuckle arms with Tool.

Removal and Installation (Cont'd)

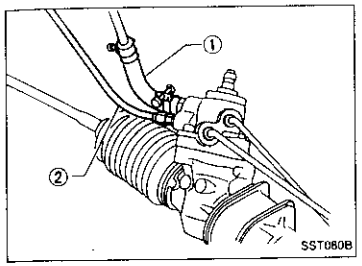

- Install pipe connector.
- Observe specified tightening torque when tightening high-pressure and low-pressure pipe connectors. Excessive tightening can damage threads or damaged connector O-ring.
  Connector tightening torque:
  Low-pressure side "1"
  27 - 39 N·m (2.8 - 4.0 kg-m, 20 - 29 ft-lb)
  High-pressure side "2"
  15 - 25 N·m (1.5 - 2.5 kg-m, 11 - 18 ft-lb)
- The O-ring in low-pressure pipe connector is larger than that in high-pressure connector. Take care to install the proper O-ring.

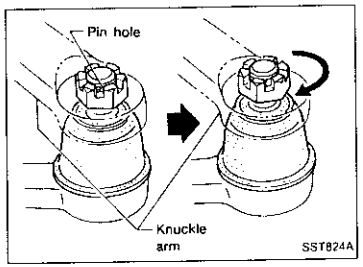

- Initially, tighten nut on tie-rod outer socket and knuckle arm to 29 to 39 N·m (3 to 4 kg-m, 22 to 29 ft-lb). Then tighten further to align nut groove with first pin hole so that cotter pin can be installed.

CAUTION:
Tightening torque must not exceed 49 N·m (5 kg-m, 36 ft-lb).

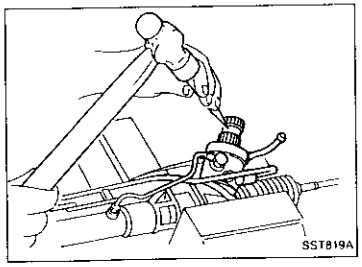

- Before removing lower joint from gear, set gear in neutral (wheels in straight-ahead position). After removing lower joint, put matching mark on pinion shaft and pinion housing to record neutral position.
- To install, set left and right dust boots to equal deflection. Attach lower joint by aligning matching marks of pinion shaft and pinion housing.

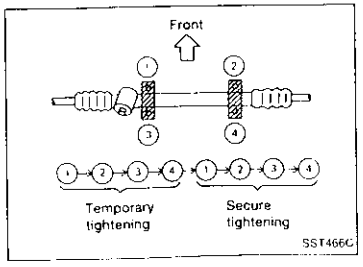

- Tighten gear housing mounting bracket bolts in the order shown.
  Temporary tightening torque:
  78 N·m (8.0 kg-m, 58 ft-lb)
  Secure tightening torque:
  88 - 108 N·m (9.0 - 11.0 kg-m, 65 - 80 ft-lb)

Disassembly and Assembly

SEC. 483-492

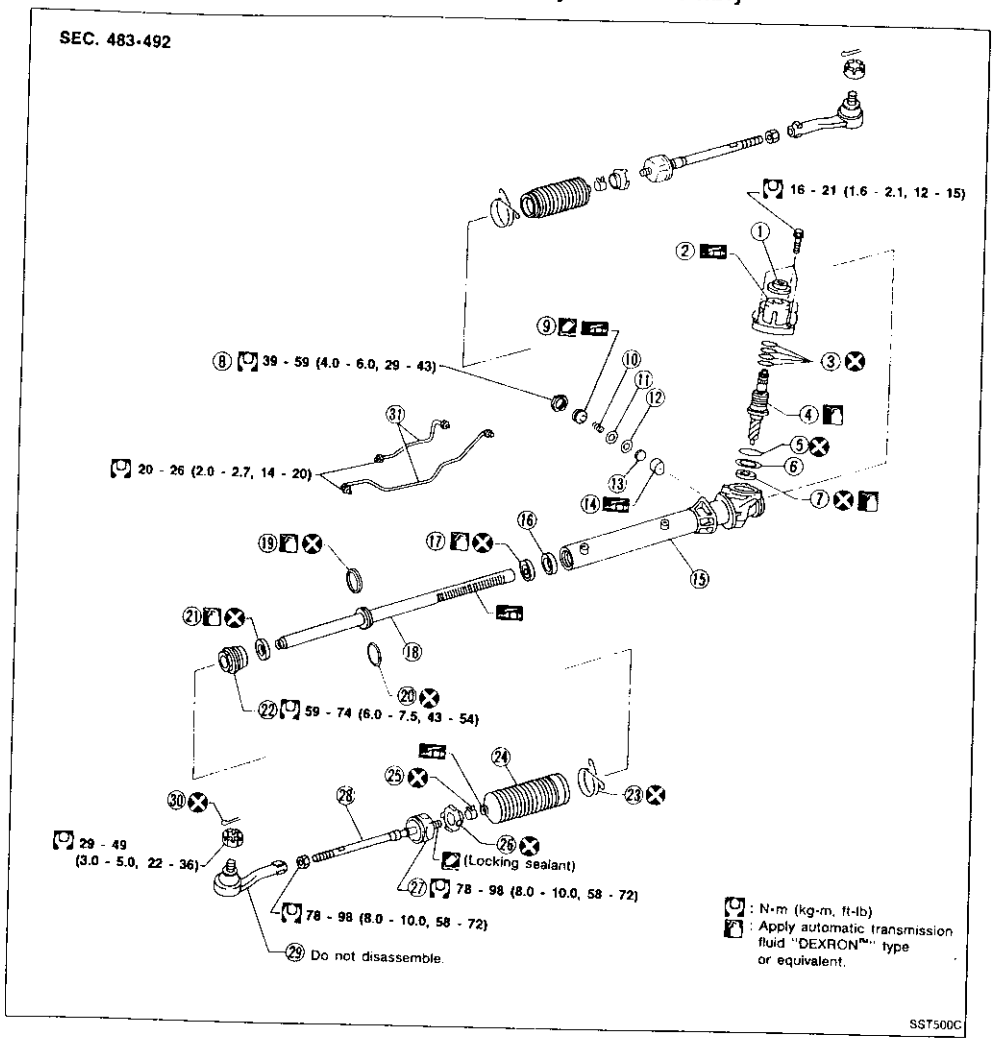

① Rear housing cover
② Rear housing assembly
③ Pinion seal ring
④ Pinion assembly
⑤ O-ring
⑥ Shim
⑦ Pinion oil seal
⑧ Lock nut
⑨ Adjusting screw
⑩ Spring
⑪ Spring disc
⑫ Washer
⑬ Spring seat
⑭ Retainer
⑮ Gear housing assembly
⑯ Center bushing
⑰ Rack oil seal
⑱ Rack assembly
⑲ Rack seal ring
⑳ O-ring
㉑ Rack oil seal
㉒ End cover assembly
㉓ Boot clamp
㉔ Dust boot
㉕ Boot band
㉖ Lock plate
㉗ Tie-rod inner socket
㉘ Tie-rod
㉙ Tie-rod outer socket
㉚ Cotter pin
㉛ Gear housing tube

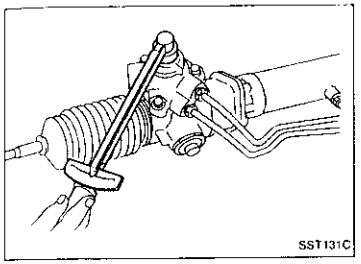

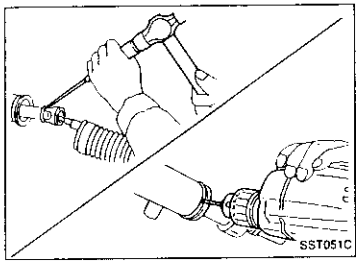

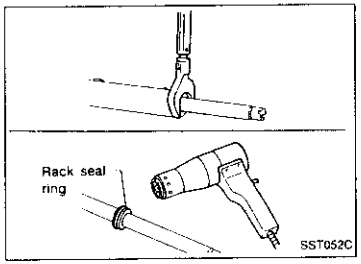

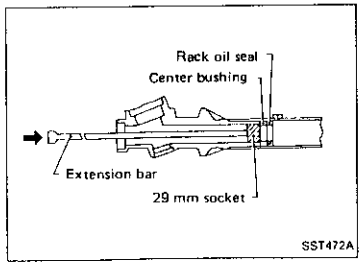

Disassembly

1. Prior to disassembling, measure pinion rotating torque. Record the pinion rotating torque as a reference.
- **Before measuring, disconnect cylinder tube and drain fluid.**
- **Use soft jaws when holding steering gear housing. Handle gear housing carefully, as it is made of aluminum. Do not grip cylinder in a vise.**
2. Remove pinion gear.

Be careful not to damage pinion gear when removing pinion seal ring.

3. Remove tie-rod outer sockets and boots.
4. Loosen tie-rod inner socket by prying up staked portion, and remove socket.
5. Remove retainer.
6. Remove pinion assembly.
7. Use a 2 to 2.5 mm (0.079 to 0.098 in) diameter drill to completely remove staked portion of gear housing end.
8. Remove gear housing end cover assembly with Tool.
9. Draw out rack assembly.
10. Remove rack seal ring.
- Using a heat gun, heat rack seal to approximately 40°C (104°F).
- Remove rack seal ring.

Be careful not to damage rack.

11. Remove center bushing and rack oil seal using tape wrapped socket and extension bar.

Do not scratch inner surfaces of pinion housing.

Inspection

Thoroughly clean all parts in cleaning solvent or automatic transmission fluid "DEXRON™" type or equivalent. Blow dry with compressed air, if available.

BOOT

Check condition of boot. If cracked excessively, replace it.

RACK

Thoroughly examine rack gear. If damaged, cracked or worn, replace it.

Inspection (Cont'd)

PINION ASSEMBLY

- Thoroughly examine pinion gear. If pinion gear is damaged, cracked or worn, replace it.
- Check that all bearings roll freely. Ensure that balls, rollers and races are not cracked, pitted or worn. Replace if necessary.

GEAR HOUSING CYLINDER

Check gear housing cylinder bore for scratches or other damage. Replace if necessary.

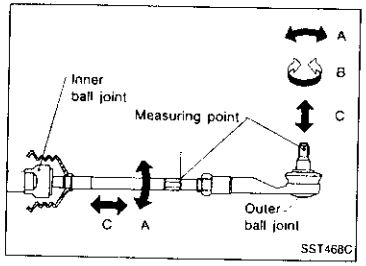

TIE-ROD OUTER AND INNER SOCKETS

- Check ball joints for swinging force.
  Tie-rod outer and inner ball joints swinging force "A":
  Refer to SDS (ST-27).
- Check ball joint for rotating torque.
  Tie-rod outer ball joint rotating torque "B":
  Refer to SDS (ST-27).
- Check ball joints for axial end play.
  Tie-rod outer and inner ball joints axial end play "C":
  Refer to SDS (ST-27).
- Check condition of dust cover. If cracked excessively, replace outer tie-rod.

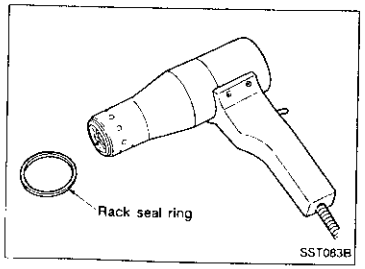

Assembly

1. Using a heat gun, heat new teflon rack seal ring to approximately 40°C (104°F). Then place it onto rack.

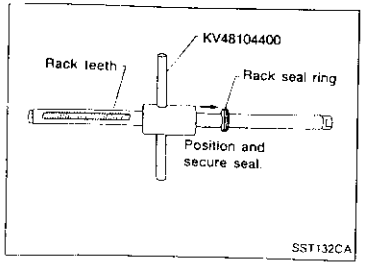

2. Using Tool, compress rack seal ring securely onto rack.
   Always insert the tool from the rack gear side.

Assembly (Cont'd)

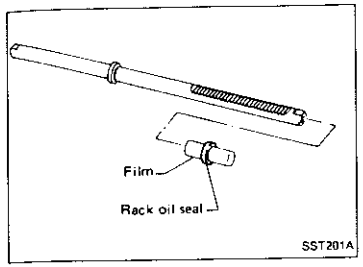

3. Insert rack oil seal.
   - **Place plastic film into rack oil seal to prevent damage by rack teeth.**
   - **Always remove plastic film after rack oil seal is positioned properly.**
   - **Make sure lips of rack oil seal face each other.**

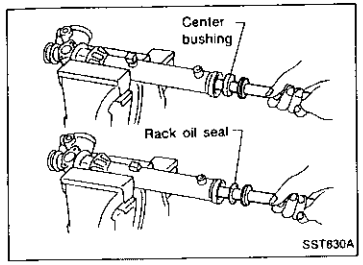

4. Install center bushing and rack oil seal with rack assembly.

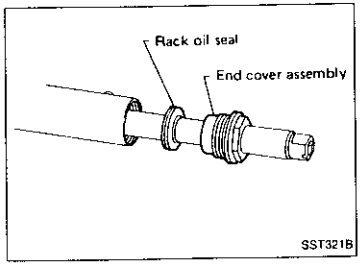

5. Insert rack oil seal and end cover assembly to rack. Then tighten end cover assembly.

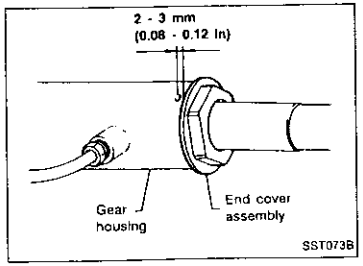

6. Fasten cylinder end cover assembly to gear housing by staking.

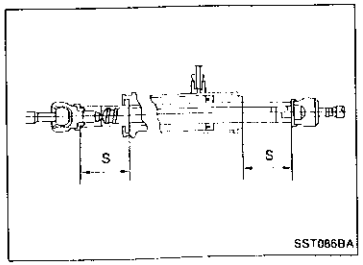

7. Set rack gear in the neutral position.
   Measured length "S":
   Refer to SDS (ST-27).

Assembly (Cont'd)

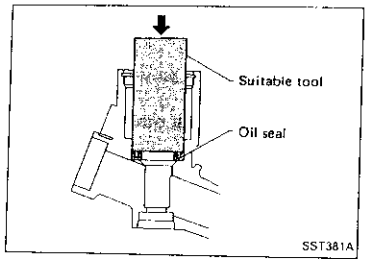

8. Coat seal lip of new pinion oil seal with multi-purpose grease. Install it into pinion housing of gear with a suitable tool.

Make sure lip of oil seal faces up when installed.

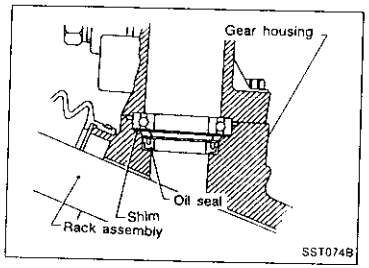

9. Install pinion bearing adjusting shim(s).

Whenever pinion assembly, gear housing and rear housing are disassembled, replace shim(s) with new ones. Always use the same number of shim(s) when replacing.

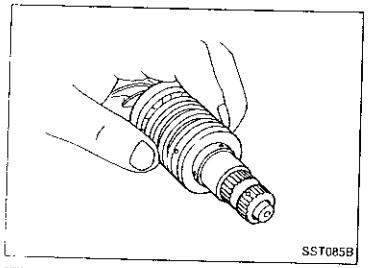

10. Install new pinion seal ring (made of Teflon) on pinion gear assembly.
- Using a heat gun, heat pinion seal ring to approximately 40°C (104°F) before installing it onto pinion gear assembly.
- Make sure pinion seal ring is properly settled in valve groove.

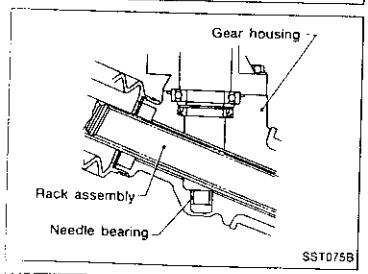

11. Apply a coat of multi-purpose grease to needle bearing roller and oil seal lip.

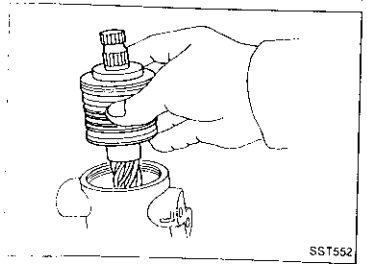

12. Install pinion assembly to rear housing.

Be careful not to damage pinion oil seal.

Assembly (Cont'd)

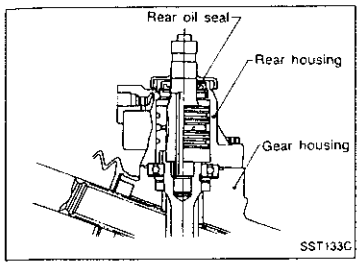

13. Apply a coat of multi-purpose grease to rear oil seal lip before installing rear housing.

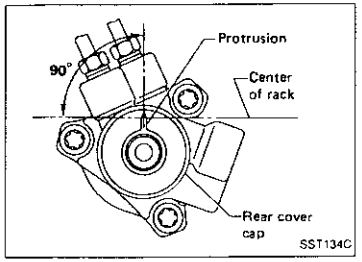

14. Ensure that the rack is centered. Install rear cover cap so that protrusion of rear housing cover is positioned as shown in figure.

Be careful not to damage worm ring and oil seal.

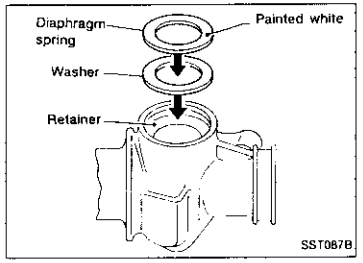

15. Install diaphragm spring at retainer.
- Always install retainer, spring washer and diaphragm spring in that order.
- Make sure convex end (painted white) of diaphragm spring faces outward when installing.

16. Install retainer spring and adjusting screw temporarily.

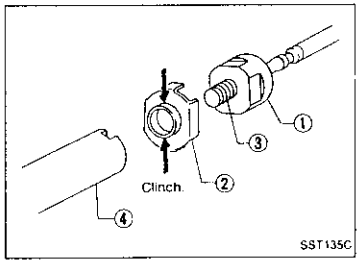

17. Install new lock plate.
- Attach lock plate ② to side rod inner socket ①.
- Apply locking sealant to inner socket threads ③. Screw inner socket into rack ④ and tighten to specified torque.
- Clinch two places of lock plate at rack's groove.

CAUTION:

To prevent scratching the boot, remove burrs from lock plate.

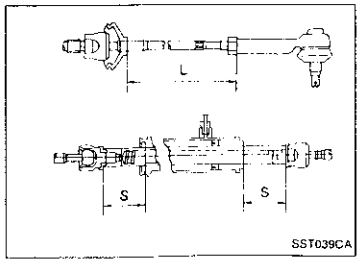

18. Tighten outer socket lock nut.

Tie-rod length "L":

Refer to SDS (ST-27).

19. Measure rack stroke.

Rack stroke "S":

Refer to SDS (ST-27).

Assembly (Cont'd)

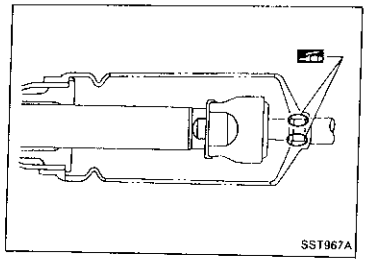

20. Before installing boot, coat the contact surfaces between boot and tie-rod with grease.

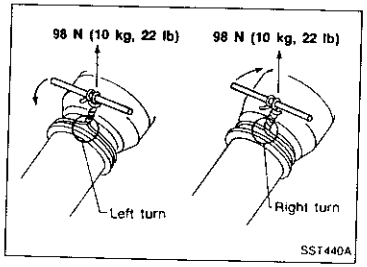

21. Install boot clamps.
- To install, wrap boot clamp around boot groove twice. To tighten clamp, place a screwdriver through both rings. Twist rings 4 to 4-1/2 turns while pulling with a force of approx. 98 N (10 kg, 22 lb).
- Twist boot clamp in the direction shown in figure at left.

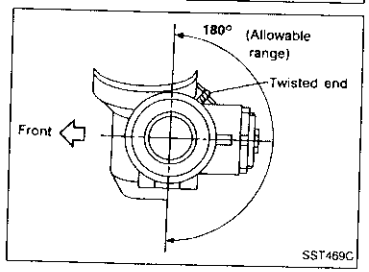

- Place twisted ends of boot clamp in the range shown. (This will prevent interference with other parts.)

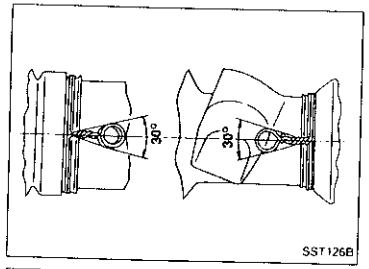

- After twisting boot clamp, bend twisted and diagonally so it does not contact boot.

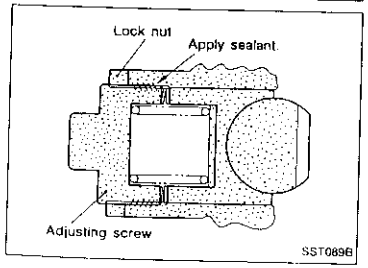

Adjustment

Adjust pinion rotating torque as follows:
1. Set gears to Neutral without fluid in the gear.
2. Coat the adjusting screw with locking sealant and screw it in.
3. Lightly tighten lock nut.
4. Tighten adjusting screw to a torque of 4.9 to 5.9 N·m (50 to 60 kg-cm, 43 to 52 in-lb).
5. Loosen adjusting screw, then retighten it to 0.2 N·m (2 kg-cm, 1.7 in-lb).
6. Move rack over its entire stroke several times.

Adjustment (Cont'd)

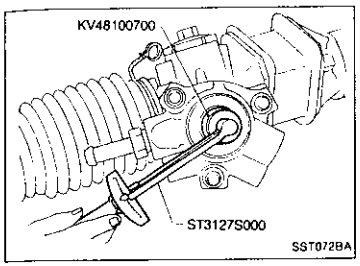

7. Measure pinion rotating torque within the range of 180° from neutral position.
   Stop the gear at the point of maximum torque.
8. Loosen adjusting screw, then retighten it to 4.9 N·m (50 kg-cm, 43 in-lb).
9. Loosen adjusting screw by 70° to 110°.

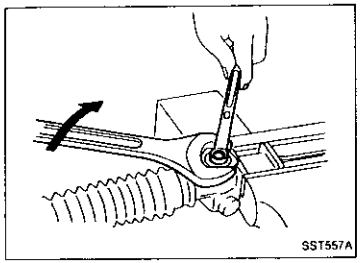

10. Prevent adjusting screw from turning, and tighten lock nut to specified torque.

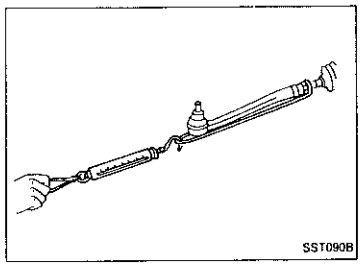

11. Check rack sliding force on vehicle as follows:
a. Install steering gear onto vehicle, but do not connect tie-rod to knuckle arm.
b. Connect all piping and fill with steering fluid.
c. Start engine and bleed air completely.
d. Disconnect steering column lower joint from the gear.
e. Keep engine at idle and make sure steering fluid has reached normal operating temperature.
f. Pull tie-rod slowly to move it from neutral position to ± 11.5 mm (± 0.453 in) at speed of 3.5 mm (0.138 in)/s. Check that rack sliding force is within specification.
   Average rack sliding force:
   186 - 245 N (19 - 25 kg, 42 - 55 lb)
   Maximum force deviation:
   98 N (10 kg, 22 lb)
g. Check sliding force outside above range at rack speed of 40 mm (1.57 in)/s.
   Maximum rack sliding force:
   294 N (30 kg, 66 lb)
   Maximum force deviation:
   147 N (15 kg, 33 lb)
- If rack sliding force is not within specification, readjust by repeating adjustment procedure from the beginning.
- If rack sliding force is still out of specification after readjustment, gear assembly needs to be replaced.

Disassembly and Assembly

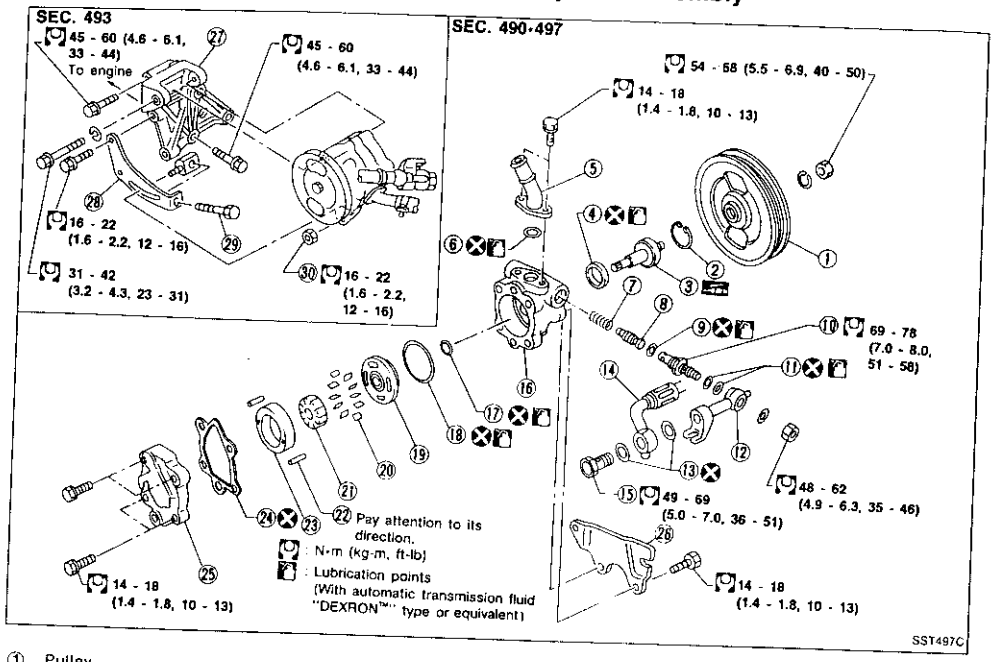

① Pulley
② Snap ring
③ Drive shaft assembly
④ Oil seal
⑤ Suction pipe
⑥ O-ring
⑦ Spring
⑧ Flow control valve
⑨ O-ring
⑩ Connector bolt
⑪ O-ring
⑫ Joint
⑬ Washer
⑭ Hose
⑮ Eye bolt
⑯ Casing
⑰ O-ring
⑱ O-ring
⑲ Front side plate
⑳ Vane
㉑ Rotor
㉒ Pin
㉓ Cam ring
㉔ Gasket
㉕ Rear cover
㉖ Front bracket
㉗ Power steering pump bracket
㉘ Adjusting bar
㉙ Adjusting bolt
㉚ Adjusting bolt lock nut

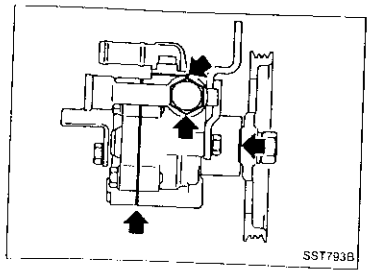

Pre-disassembly Inspection

Disassemble the power steering oil pump only if the following items are found.

- Oil leak from any point shown in the figure.
- Deformed or damaged pulley.
- Poor performance.

Disassembly

CAUTION:

- **Parts which can be disassembled are strictly limited. Never disassemble parts other than those specified.**
- **Disassemble in as clean a place as possible.**
- **Clean your hands before disassembly.**
- **Do not use rags; use nylon cloths or paper towels.**
- **Follow the procedures and cautions in the Service Manual.**
- **When disassembling and reassembling, do not let foreign matter enter or contact the parts.**

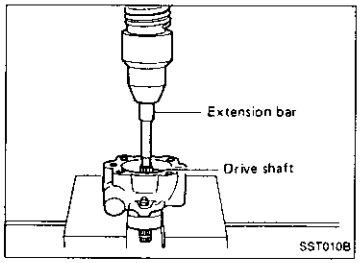

- Remove snap ring, then draw pulley shaft out.

Be careful not to drop pulley shaft.

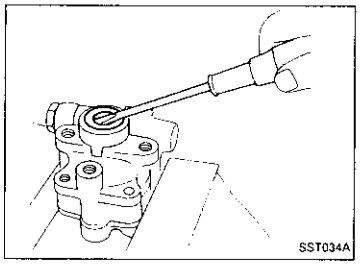

- Remove oil seal.

Be careful not to damage front housing.

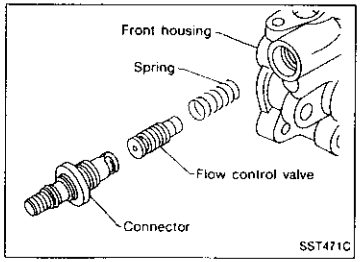

- Remove connector.

Be careful not to drop flow control valve.

Inspection

Inspect each component part for wear, deformation, scratches, and cracks. If damage is found, replace the part.

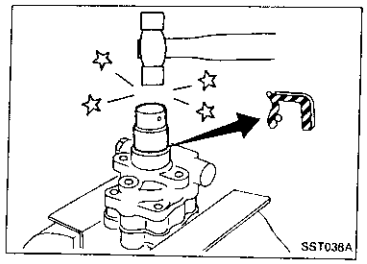

Assembly

Assemble oil pump, noting the following instructions.

- Make sure O-rings and oil seal are properly installed.
- Always install new O-rings and oil seal.
- Be careful of oil seal direction.
- Cam ring, rotor and vanes must be replaced as a set if necessary.
- Coat each part with ATF when assembling.

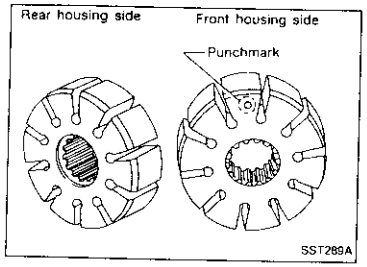

- Pay attention to the direction of rotor.

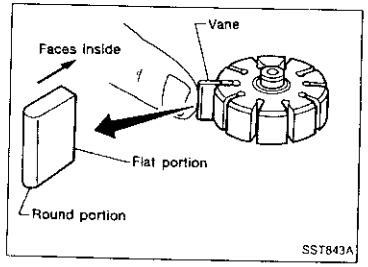

- When assembling vanes to rotor, rounded surfaces of vanes must face cam ring side.

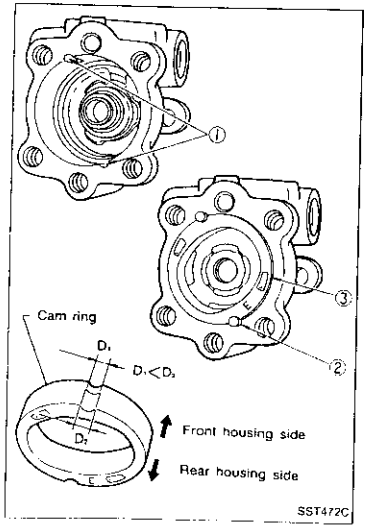

- Insert pin ② into pin groove ① of front housing and front side plate. Then install cam ring ③ as shown at left.

General Specifications

Applied model	All
Steering model	Power steering
Steering gear type	PR24AC
Steering overall gear ratio	17.2
Turns of steering wheel (Lock to lock)	3.1
Steering column type	Collapsible, tilt

Inspection and Adjustment

GENERAL

Steering wheel axial play mm (in)	0 (0)
Steering wheel play limit mm (in)	35 (1.38)
Allowable movement of gear housing mm (in)	±2 (±0.08)

STEERING COLUMN

Applied model	LHD	RHD
Steering column length "L_1" mm (in)	630.7 (24.83)	610.0 (24.02)
Steering column lower shaft length "L_2" mm (in)	323.7 (12.74)	341.0 (13.43)

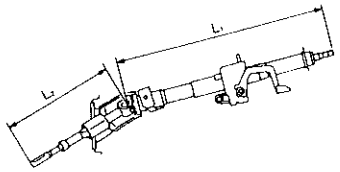

STEERING GEAR AND LINKAGE

Steering gear type	PR24AC
Tie-rod outer ball joint	
Swinging force at cotter pin hole "A" N (kg, lb)	6.9 - 65.7 (0.7 - 6.7, 1.5 - 14.8)
Rotating torque: "B" N·m (kg-cm, in-lb)	0.29 - 2.94 (3.0 - 30.0, 2.6 - 26.0)
Axial end play: "C" mm (in)	0 (0)
Tie-rod inner ball joint	
Swinging force*: "A" N (kg, lb)	6.9 - 56.9 (0.7 - 5.8, 1.5 - 12.8)
Axial end play: "C" mm (in)	0 (0)
Tie-rod standard length "L" mm (in)	169 (6.65)

*: Measuring point [ℓ: 137 mm (5.39 in)]

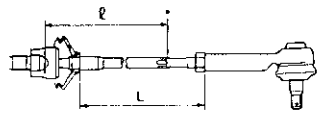

Rack stroke "S" mm (in)	68.5 (2.697)

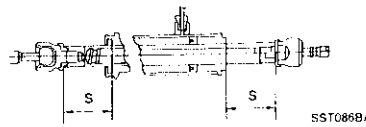

Inspection and Adjustment (Cont'd)

POWER STEERING

Steering gear type	PR24AC
Rack sliding force N (kg, lb)	
Under normal operating oil pressure	
Range within ±11.5 mm (±0.453 in) from the neutral position at rack speed of 3.5 mm (0.138 in)/s	
Average force	186 - 245 (19 - 25, 42 - 55)
Maximum force deviation	98 (10, 22)
Except for the above range	
Maximum sliding force	294 (30, 66)
Maximum force deviation	147 (15, 33)
Retainer adjustment	
Adjusting screw	
Initial tightening torque N·m (kg-cm, in-lb)	4.9 - 5.9 (50 - 60, 43 - 52)
Retightening torque after loosening	0.2 (2, 1.7)
Tightening torque after gear has settled	4.9 (50, 43)
Returning angle degree	70° - 110°
Steering wheel turning force (Measured at one full turn from the neutral position) N (kg, lb)	39 (4, 9) or less
Fluid capacity (Approximate) ℓ (Imp qt)	0.9 (3/4)
Oil pump maximum pressure kPa (bar, kg/cm², psi)	8,630 - 9,219 (86.3 - 92.2, 88 - 94, 1,251 - 1,337)

RESTRAINT SYSTEM

SECTION RS

CONTENTS

PRECAUTION 2
Supplemental Restraint System (SRS) "AIR BAG" and "SEAT BELT PRE-TENSIONER" 2
SEAT BELTS 3
Front Seat Belt 3
Rear Seat Belt 4
SUPPLEMENTAL RESTRAINT SYSTEM (SRS) 5
Precautions for SRS "Air Bag" and "Seat Belt Pre-tensioner" Service 5
Special Service Tools 5
Commercial Service Tool 6
Description 6
SRS Component Parts Location 6
Maintenance Items 7
Removal and Installation — Diagnosis Sensor Unit and Seat Belt Pre-tensioner 8
Removal — Air Bag Module and Spiral Cable 9
Removal — Front Passenger Air Bag Module 10
Installation — Air Bag Module and Spiral Cable 11
Installation — Front Passenger Air Bag Module 12
Disposal of Air Bag Module and Seat Belt Pre-tensioner 12
TROUBLE DIAGNOSES — Supplemental Restraint System (SRS) 17
Wiring Diagram — SRS — 17
Schematic 20
Self-diagnosis 21
Diagnostic Procedure 1 27
Diagnostic Procedure 2 27
Diagnostic Procedure 3 28
Collision Diagnosis 29

When you read wiring diagrams:
- Read GI section, "HOW TO READ WIRING DIAGRAMS".
- See EL section, "POWER SUPPLY ROUTING" for power distribution circuit.

When you perform trouble diagnoses, read GI section, "HOW TO FOLLOW FLOW CHART IN TROUBLE DIAGNOSES" and "HOW TO PERFORM EFFICIENT DIAGNOSIS FOR AN ELECTRICAL INCIDENT".

Supplemental Restraint System (SRS) "AIR BAG" and "SEAT BELT PRE-TENSIONER"

The Supplemental Restraint System "Air Bag" and "Seat Belt Pre-tensioner", used along with a seat belt, help to reduce the risk or severity of injury to the driver and front passenger in a frontal collision. The Supplemental Restraint System consists of air bag modules (located in the center of the steering wheel and on the instrument panel on the passenger side), seat belt pre-tensioners, a diagnosis sensor unit, warning lamp, wiring harness and spiral cable.

WARNING:

- **To avoid rendering the SRS inoperative, which could increase the risk of personal injury or death in the event of a collision which would result in air bag inflation, all maintenance must be performed by an authorized NISSAN dealer.**
- **Improper maintenance, including incorrect removal and installation of the SRS, can lead to personal injury caused by unintentional activation of the system.**
- **All SRS air bag electrical wiring harnesses and connectors are covered with yellow outer insulation. Do not use electrical test equipment on any circuit related to the SRS.**

CAUTION:

- **Before removing the seat belt assembly, turn the ignition switch off, disconnect battery ground cable and wait for at least 10 minutes. (For Europe model)**
- **Do not disassemble buckle or seat belt assembly.**
- **Replace anchor bolts if they are deformed or worn out.**
- **Never oil tongue and buckle.**
- **If any component of seat belt assembly is questionable, do not repair. Replace as seat belt assembly.**
- **If webbing is cut, frayed, or damaged, replace seat belt assembly.**
- **When replacing seat belt assembly, use a genuine seat belt assembly.**
- **After any collision, inspect all seat belt assemblies, including retractors and other attached hardwares (i.e., guide rail set).**

Front Seat Belt

① Remove rear seat. Refer to "SEAT" in BT section for details.
② Remove rear pillar lower garnish. Refer to "INTERIOR TRIM" in BT section for details.
③ Disconnect seat belt pre-tensioner connector. (For Europe model)
④ Remove floor anchor cover and the anchor bolt.
⑤ Remove pillar anchor cover and the anchor bolt.
⑥ Remove the screw and the anchor bolt securing front seat belt assembly.

SEC. 868

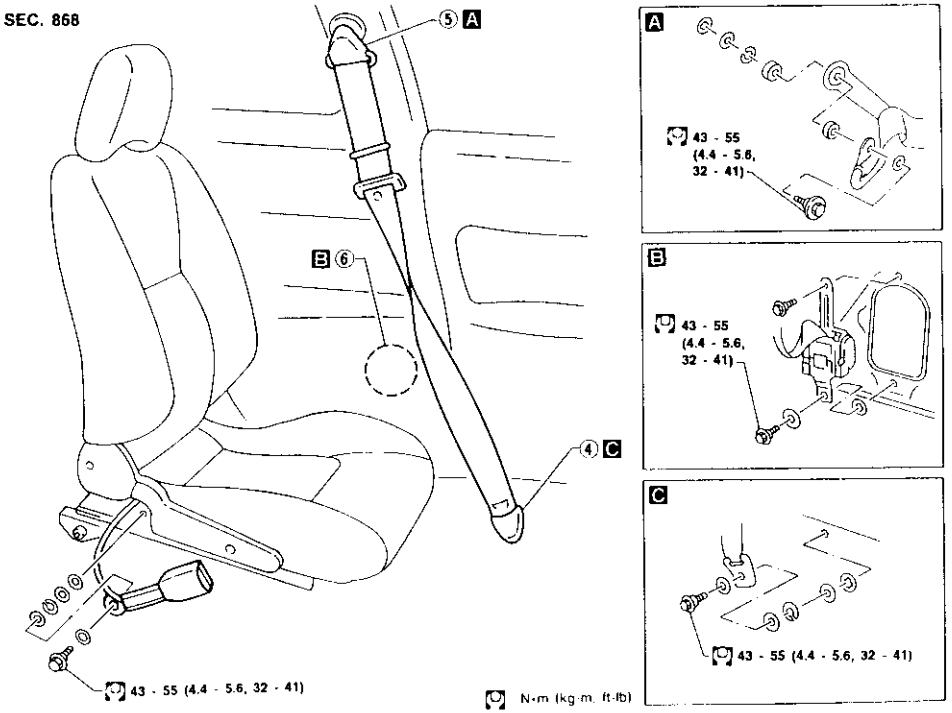

MRS009A

Rear Seat Belt

1. Remove rear seat. Refer to "SEAT" in BT section for details.
2. Remove rear pillar lower garnish. Refer to "INTERIOR TRIM" in BT section for details.
3. Remove each anchor bolt.
4. Remove the anchor bolt securing rear seat belt assembly.

SEC. 869

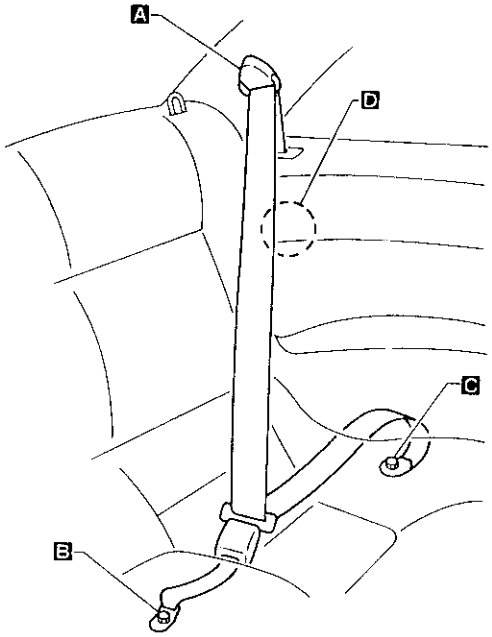

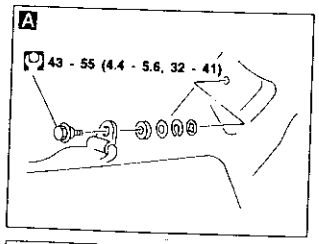

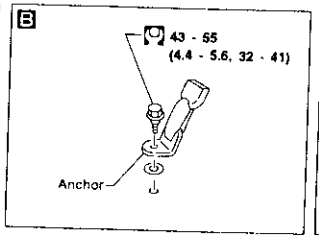

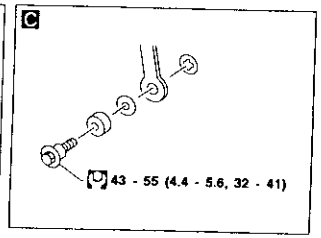

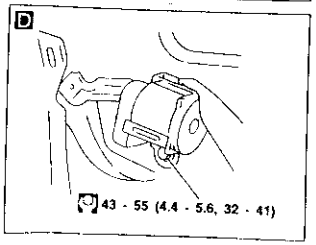

N·m (kg-m, ft-lb)

MBF497BA

Precautions for SRS "Air Bag" and "Seat Belt Pre-tensioner" Service

- Do not use a circuit tester to check SRS circuits.
- Before servicing the SRS, turn ignition switch "OFF", disconnect battery ground cable and wait for at least 10 minutes.
  For approximately ten minutes after the cables are removed, it is still possible for the air bag and seat belt pre-tensioner to deploy. Therefore, do not work on any SRS connectors or wires until at least ten minutes have passed.
- Diagnosis sensor unit must always be installed with their arrow marks "⇦" pointing towards the front of the vehicle for proper operation. Also check diagnosis sensor unit for cracks, deformities or rust before installation and replace as required.
- The spiral cable must be aligned with the neutral position since its rotations are limited. Do not attempt to turn steering wheel or column after removal of steering gear.
- Handle air bag module carefully. Always place it with the pad side facing upward.
- After removing any SRS parts, discard old bolts and replace with new ones. Conduct self-diagnosis to check entire SRS for proper function.
- After air bag inflates, the front instrument panel assembly should be replaced.

Special Service Tools

Tool number Tool name	Description
KV99106400 Deployment tool	Disposing of air bag module 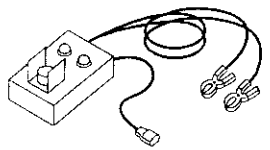 NT357
KV99106S0 Deployment tool adapters	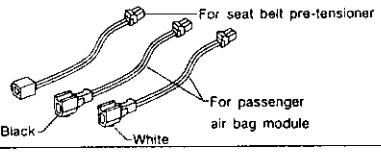 NT353
KV99105300 Passenger air bag bracket	Anchor the passenger air bag module 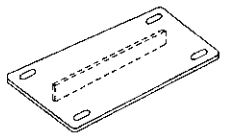 NT354

Commercial Service Tool

Tool name	Description
Special torx bit	Use for special bolts [TAMPER RESISTANT TORX (Size T50)] 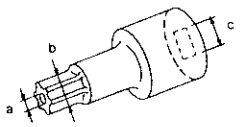 a: 3.5 (0.138) dia. b: 8.5 - 8.6 (0.335 - 0.339) dia. c: approx. 10 (0.39) sq. Unit: mm (in) NT361

Description

The air bag deploys if the diagnosis sensor unit activates while the ignition switch is in "ON" or "START" position.

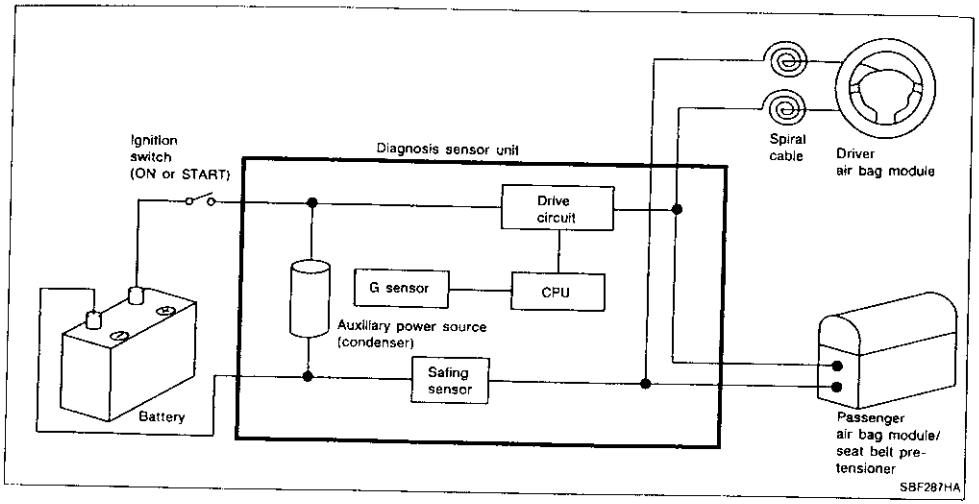

SRS Component Parts Location

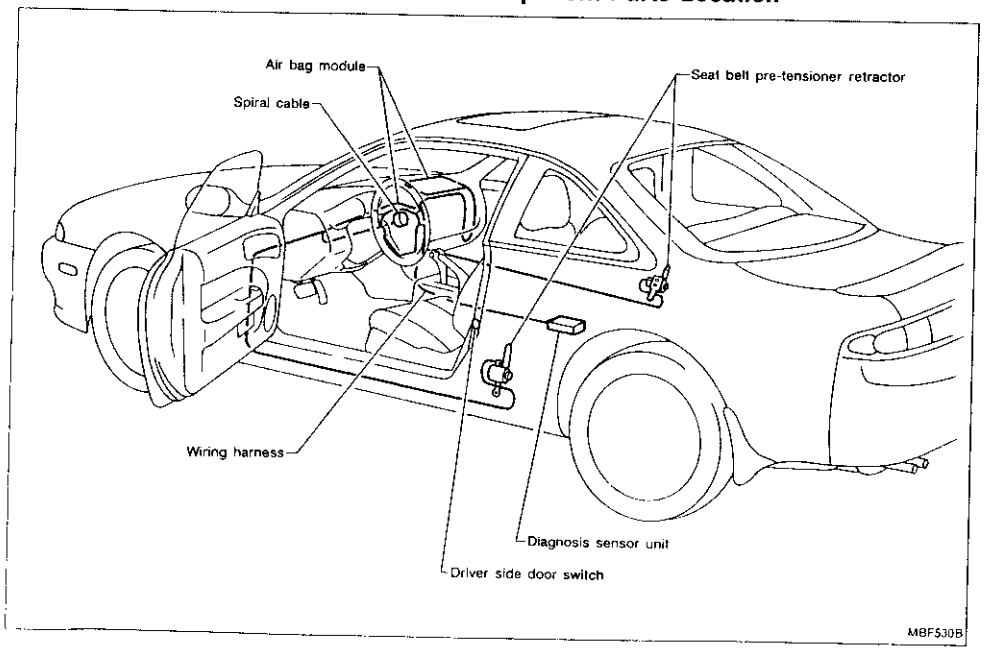

Maintenance Items

1. Check "AIR BAG" warning lamp (Models equipped with air bags)
   After turning ignition key to "ON" or "START" position, "AIR BAG" warning lamp illuminates for about 7 seconds. The "AIR BAG" warning lamp will go out after about 7 seconds, if no malfunction is detected.
   When a warning lamp flashes, check and correct cause of the problem.

2. Visually check SRS components

(1) Diagnosis sensor unit — Airbag
- Check case and bracket for dents, cracks or deformities.
- Check connectors for damage, and terminals for deformities.

(2) Main harness and air bag harness
- Check connectors for poor connections.
- Check harnesses for binding, connectors for damage, and terminals for deformities.

(3) Spiral cable
- Visually check lock (engagement) pins and combination switch for damage.
- Check connectors, flat cable and protective tape for damage.
- Check steering wheel for noise, binding or difficult operation.

(4) Air bag module and steering wheel
- Remove air bag module from steering wheel or instrument panel. Check harness cover and connectors for damage, terminals for deformities, and harness for binding.
- Install driver side air bag module to steering wheel to check fit or alignment with the wheel.
- Check steering wheel for excessive free play.
- Install passenger side air bag module to instrument panel to check fit or alignment with the instrument panel.

CAUTION:
Replace previously used screws with new ones.

(5) Seat belt pre-tensioner
- Check harness cover and connectors for damage, terminals for deformities, and harness for binding.
- Check belts for damage and anchors for loose mounting.
- Check retractor for smooth operation.
- Perform self-diagnosis for seat belt pre-tensioner using circuit tester. Refer to "Self-diagnosis" for details. (RS-21)

Removal and Installation — Diagnosis Sensor Unit and Seat Belt Pre-tensioner

CAUTION:

- **Before servicing SRS, turn the ignition switch off, disconnect battery ground cable and wait for at least 10 minutes.**
- **The special bolts are coated with bonding agent. Discard old ones after removal; replace with new ones.**
- **Check diagnosis sensor unit for proper installation.**
- **Check diagnosis sensor unit to ensure they are free of deformities, dents, cracks or rust. If they show any visible signs of damage, replace them with new ones.**
- **Check diagnosis sensor unit brackets to ensure they are free of deformities or rust.**
- **Do not attempt to disassemble seat belt pre-tensioner.**
- **Do not drop or impact seat belt pre-tensioner. If any portion is damaged, replace the seat belt pre-tensioner.**
- **Do not expose seat belt pre-tensioner to temperatures exceeding 80°C (176°F).**
- **Whenever seat belts (equipped with pre-tensioner) are moved, ensure that cylinder faces down. Do not hold cylinder.**

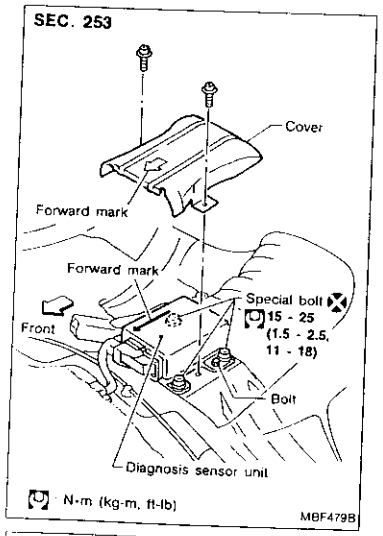

REMOVAL OF DIAGNOSIS SENSOR UNIT

1. Disconnect driver and passenger air bag module connectors. Also, disconnect seat belt pre-tensioner connector.
2. Remove rear seat assembly. Refer to "Rear Seat" in BT section.
3. Remove cover.
4. Disconnect diagnosis sensor unit connector.
5. Remove bolt and also remove special bolts using the TAMPER RESISTANT TORX (Size T50), from diagnosis sensor unit.
   Then remove the diagnosis sensor unit.

NOTE:

- **To install, reverse the removal procedure sequence.**

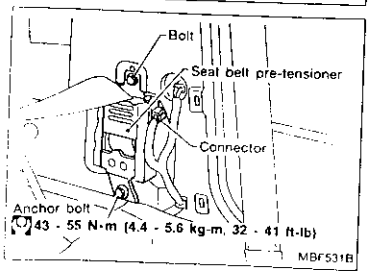

REMOVAL OF SEAT BELT PRE-TENSIONER

For removal of seat belt pre-tensioner, refer to "Front Seat Belt" for details. (RS-3)

NOTE:

- **To install, reverse the removal procedure sequence.**
- **After replacement, perform self-diagnosis for seat belt pre-tensioner using circuit tester. Refer to "Self-diagnosis" for details. (RS-21)**

Removal — Air Bag Module and Spiral Cable

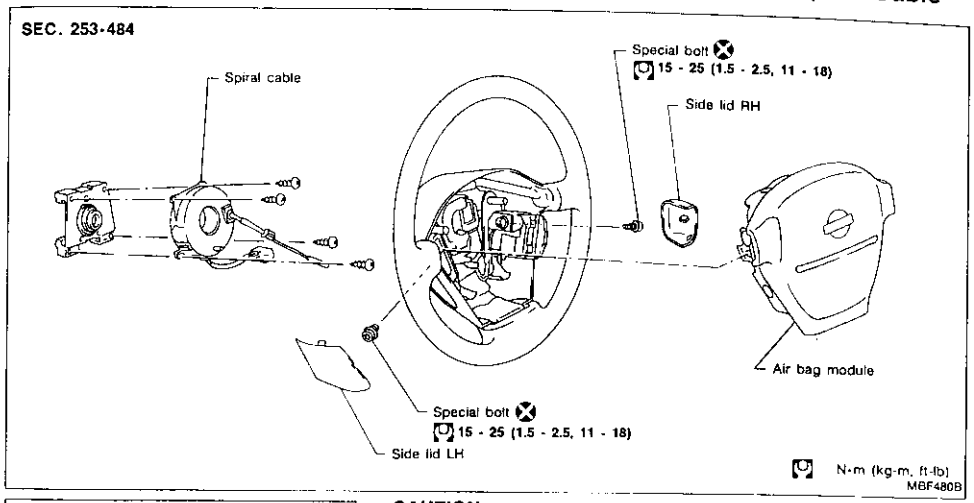

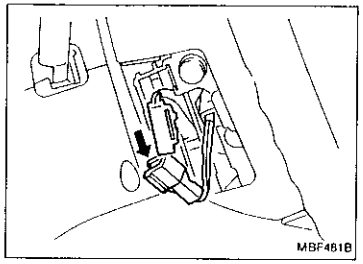

CAUTION:

Before servicing SRS, turn the ignition switch off, disconnect battery ground cable and wait for at least 10 minutes.

1. Remove side lid LH from steering wheel, and disconnect air bag module connector.

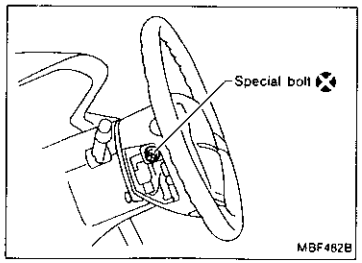

2. Remove side lid. Using the TAMPER RESISTANT TORX (Size T50), remove left and right special bolts. Air bag module can then be removed.

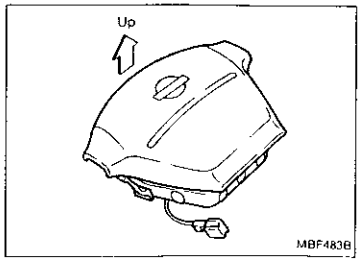

CAUTION:

- **Always place air bag module with pad side facing upward.**
- **Do not attempt to disassemble air bag module.**
- **The special bolts are coated with bonding agent. Discard old ones after removal; replace with new ones.**

Removal — Air Bag Module and Spiral Cable (Cont'd)

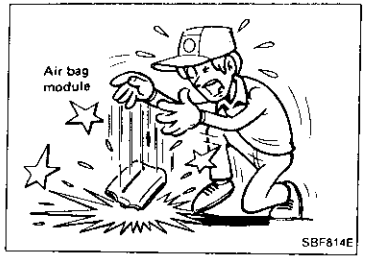

- **Do not drop or impact air bag module. If any portion is deformed or cracked, replace the module.**
- **Do not expose the air bag module to temperatures exceeding 93°C (199°F).**
- **Do not allow oil, grease or water to come in contact with the air bag module.**

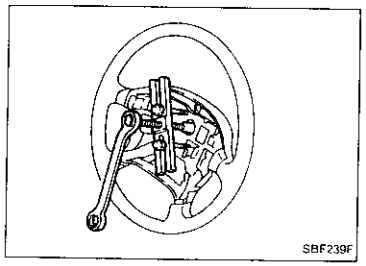

3. Set steering wheel in the neutral position.
4. Disconnect horn connector and remove nuts.
5. Using steering wheel puller, remove steering wheel. Be careful not to over-tighten puller bolt on steering wheel.
6. Remove steering column cover.
7. Disconnect connector and remove the four screws. The spiral cable can then be removed.

Removal — Front Passenger Air Bag Module

CAUTION:
Before servicing SRS, turn the ignition switch off, disconnect battery ground cable and wait for at least 10 minutes.

1. Remove connector bracket from air bag module and disconnect air bag module connector.

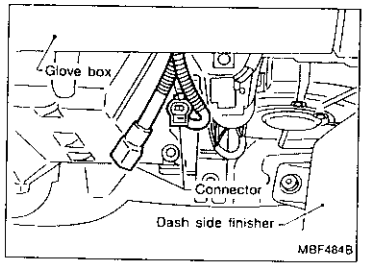

2. Remove instrument panel.
3. Remove the special bolts from left and right sides of front passenger air bag module. Then remove the air bag module from the steering member.
- Air bag module is heavy and should be supported using both hands during removal.

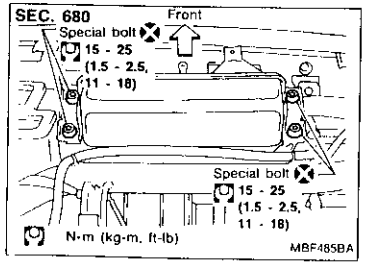

CAUTION:
- **Always place air bag module with pad side facing upward.**
- **Do not attempt to disassemble air bag module.**
- **The special bolts are coated with bonding agent. Discard old ones after removal; replace with new ones.**

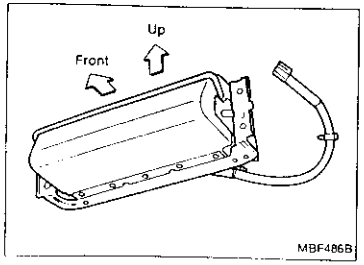

Removal — Front Passenger Air Bag Module (Cont'd)

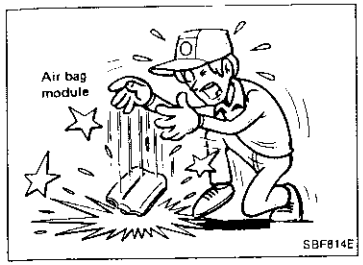

- **Do not drop or impact air bag module. If any portion is deformed or cracked, replace the module.**
- **Do not expose the air bag module to temperatures exceeding 93°C (199°F).**
- **Do not allow oil, grease or water to come in contact with the air bag module.**

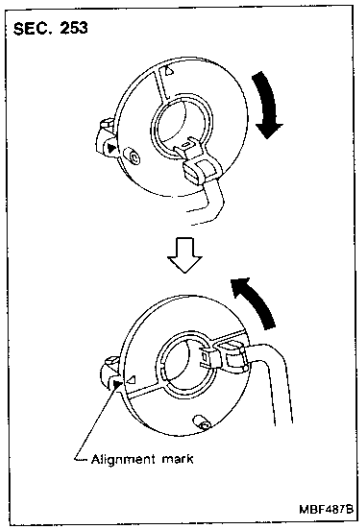

Installation — Air Bag Module and Spiral Cable

1. Set the front wheels in the straight-ahead position.
2. Make sure that the spiral cable is in the neutral position. The neutral position is detected by turning left 2.5 revolutions from the right end position. Align the two marks (▼).

CAUTION:
The spiral cable may snap due to steering operation if the cable is installed in an improper position.
Also, with the steering linkage disconnected, the cable may snap by turning the steering wheel beyond the limited number of turns. (The spiral cable can be turned up to 2.5 turns from the neutral position to both the right and left.)

3. Connect spiral cable connector and tighten with screws. Install steering column cover.

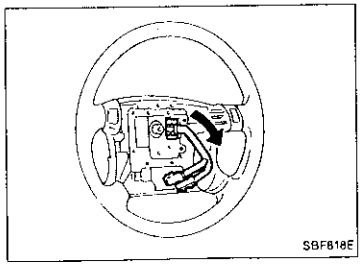

4. Install steering wheel setting spiral cable pin guides, and pull spiral cable through.
5. Connect horn connector and engage spiral cable with pawls in steering wheel.
6. Tighten nuts.

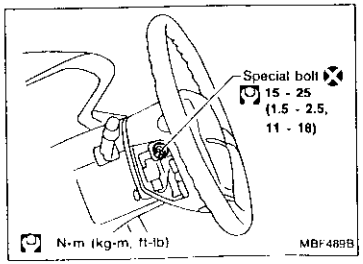

7. Position air bag module and tighten with new special bolts.
8. Connect air bag module connector.
9. Install all lids.
10. Conduct self-diagnosis to ensure entire SRS operates properly. (Use CONSULT or warning lamp check.)

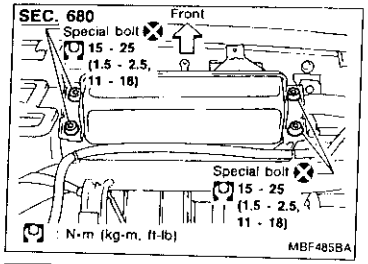

Installation — Front Passenger Air Bag Module

1. Install front passenger air bag module on steering member.
   - Ensure harness is not caught between rear of air bag module and steering member.
2. Install instrument panel.

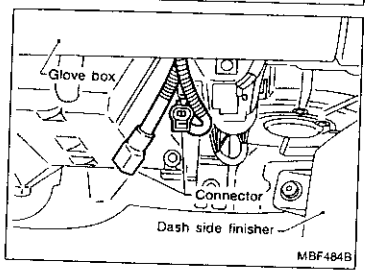

3. Connect air bag module connector to body harness connector.
4. Install air bag module connector on connector bracket.
5. Install connector bracket on air bag module.

Disposal of Air Bag Module and Seat Belt Pre-tensioner

- Make sure to deactivate air bag modules and seat belt pre-tensioners before disposing of them. Also, before disposing of a vehicle equipped with an SRS system, deactivate air bag modules and seat belt pre-tensioners. If such systems have already been deployed due to an accident, dispose of as indicated in "DISPOSING OF AIR BAG MODULE AND SEAT BELT PRE-TENSIONER".
- When deploying the air bag module and seat belt pre-tensioner, always use the Special Service Tool; Deployment tool KV99106400.
- When deploying the air bag module and seat belt pre-tensioner, stand at least 5 m (16 ft) away from the deployment component.
- Due to heat, do not touch air bag module for at least 30 minutes after deployment. Also do not touch seat belt pre-tensioner for at least 10 minutes after deployment.
- Be sure to wear gloves when handling a deployed air bag module and seat belt pre-tensioner.
- Never apply water to a deployed air bag module and seat belt pre-tensioner.
- Wash your hands clean after finishing work.

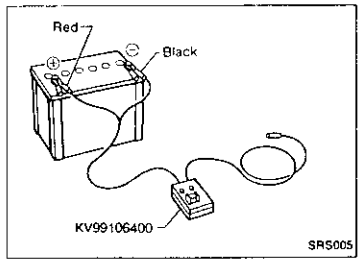

Disposal of Air Bag Module and Seat Belt Pre-tensioner (Cont'd)

CHECKING DEPLOYMENT TOOL

Connecting to battery

- Place vehicle outdoors with at least 6 m (20 ft) of open space on all sides.
- Use a voltmeter to make sure the vehicle battery is fully charged.

CAUTION:

The battery must show voltage of 9.6V or more.

Remove the battery from the vehicle and place it on dry wood blocks approximately 5 m (16 ft) away from the vehicle.

- Wait 10 to 12 minutes after the vehicle battery is disconnected before proceeding.
- Connect red clip of deployment tool to battery positive terminal and black clip to negative terminal.

CAUTION:

Make sure the polarity is correct. The right side lamp in the tool, marked "deployment tool power", should glow with a green light. If the right side lamp glows red, reverse the connections to the battery.

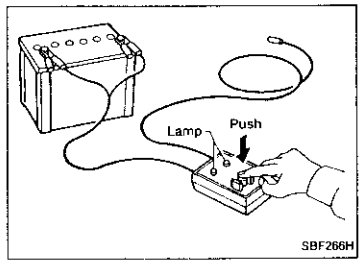

Deployment tool check

Press the deployment tool switch to the "ON" position. The left side lamp in the tool, marked "air bag connector voltage" should illuminate. If it does not illuminate, replace the tool.

Air bag deployment tool lamp illumination chart (Battery connected)

Switch operation	Left side lamp, green* "AIR BAG CONNECTOR VOLTAGE"	Right side lamp, green* "DEPLOYMENT TOOL POWER"
OFF	OFF	ON
ON	ON	ON

*: If this lamp glows red, the tool is connected to the battery incorrectly. Reverse the connections and make sure the lamp glows green.

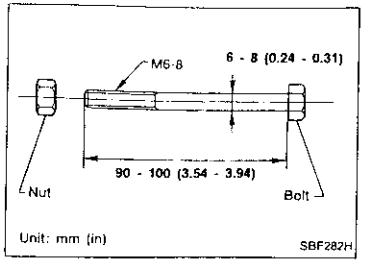

Disposal of Air Bag Module and Seat Belt Pre-tensioner (Cont'd)

DEPLOYMENT PROCEDURES FOR AIR BAG MODULE AS A UNIT

Deploying air bag module while it is mounted in vehicle may damage vehicle. Deploy air bag module as a unit except when disposing of vehicle.

Anchor air bag module in a vise secured to a firm foundation during deployment.

Deployment of driver's air bag module as a unit

1. Prepare two sets of nuts and bolts (see figure at left). These bolts are required to secure driver's air bag module to the vise.
2. Install one set of nuts and bolts to each side of the air bag module.

CAUTION:
Make sure to install two bolts and nuts on each side.

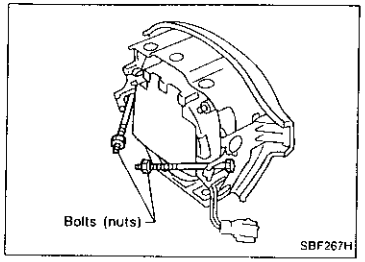

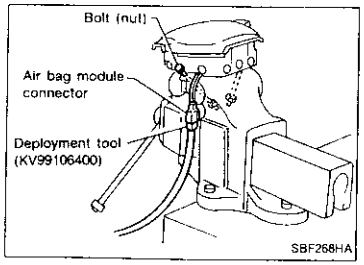

3. Firmly place two nuts (secured to air bag module) in the vise.

CAUTION:
Ensure these two nuts are equally placed in the vise. Never finish the installation with just one nut.

4. Connect deployment tool (SST: KV99106400) to air bag module connector.

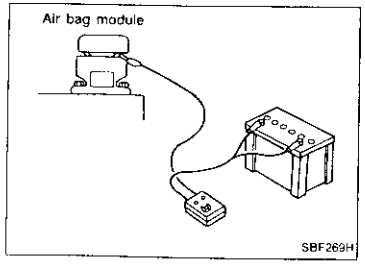

5. Connect red clip of deployment tool to battery positive terminal and black clip to negative terminal.
6. The lamp on the right side of the tool, marked "deployment tool power", should glow green, not red.
7. Press the button on the deployment tool. The left side lamp on the tool, marked "air bag connector voltage", will illuminate and the air bag module will deploy.

CAUTION:
When deploying the air bag module, stand at least 5 m (16 ft) away from the air bag module.

Deployment of passenger air bag module as a unit

1. Using wire, secure air bag module to passenger air bag bracket (SST: KV99105300) at two places.

CAUTION:
Use wire of at least 1 mm (0.04 in) in diameter.

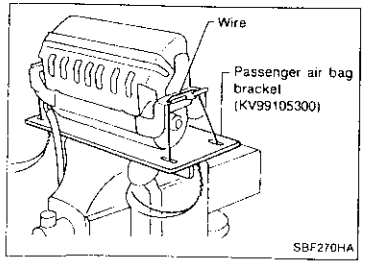

Disposal of Air Bag Module and Seat Belt Pre-tensioner (Cont'd)

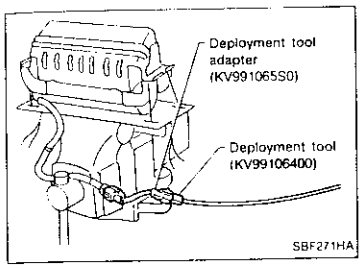

2. Firmly anchor passenger air bag bracket in a vise.
3. Connect deployment tool adapter (SST: KV991065S0) to deployment tool (SST: KV99106400) connector and connector on either side of air bag module.

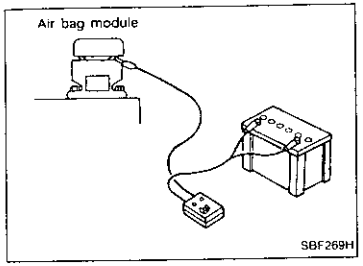

4. Connect red clip of deployment tool to battery positive terminal and black clip to negative terminal.
5. The lamp on the right side of the tool, marked "deployment tool power", should glow green, not red.
6. Press the button on the deployment tool. The left side lamp on the tool, marked "air bag connector voltage", will illuminate and the air bag module will deploy.

CAUTION:
When deploying the air bag module, stand at least 5 m (16 ft) away from the air bag module.

CAUTION:
Always activate one inflator at a time.

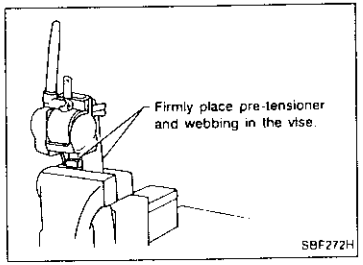

Deployment of seat belt pre-tensioner as a unit

1. Firmly anchor seat belt pre-tensioner in a vise.

CAUTION:
Ensure bracket and webbing are placed in the vise.

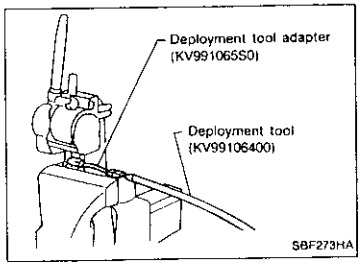

2. Connect deployment tool adapter (SST: KV991065S0) to deployment tool (SST: KV99106400) connector and seat belt pre-tensioner connector.

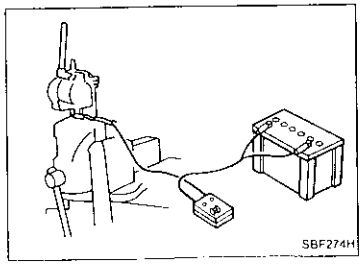

3. Connect red clip of deployment tool to battery positive terminal and black clip to negative terminal.
4. The lamp on the right side of the tool, marked "deployment tool power", should glow green, not red.
5. Press the button on the deployment tool. The left side lamp on the tool, marked "air bag connector voltage", will illuminate and the seat belt pre-tensioner will deploy.

CAUTION:
When deploying the seat belt pre-tensioner, stand at least 5 m (16 ft) away from the seat belt pre-tensioner.

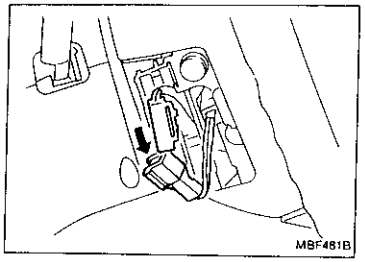

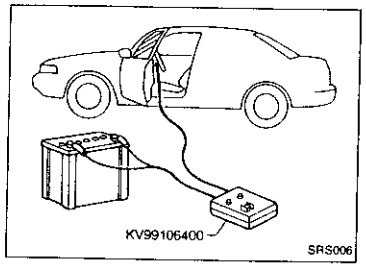

Disposal of Air Bag Module and Seat Belt Pre-tensioner (Cont'd)

DEPLOYMENT OF AIR BAG MODULE AND SEAT BELT PRE-TENSIONER WHILE MOUNTED IN VEHICLE

When disposing of a vehicle, deploy air bag modules and seat belt pre-tensioners while they are mounted in vehicle.

CAUTION:

When deploying air bag module or seat belt pre-tensioner, ensure vehicle is empty.

1. Disconnect battery ground cable and wait 10 minutes.
2. Disconnect air bag modules and seat belt pre-tensioners connector.
3. Connect deployment tool connector (SST: KV99106400) to air bag module or seat belt pre-tensioner.
   For front passenger air bag module and seat belt pre-tensioner, attach deployment tool adapters (SST: KV991065S0) to the tool connector.
4. Connect red clip of deployment tool to battery positive terminal and black clip to negative terminal.
5. The lamp on the right side of the tool, marked "deployment tool power", should glow green, not red.
6. Press the button on the deployment tool. The left side lamp on the tool, marked "air bag connector voltage", will illuminate and the air bag module or seat belt pre-tensioner will deploy.
7. After deployment, remove them from vehicle and seal them up in plastic bags, then dispose of them.

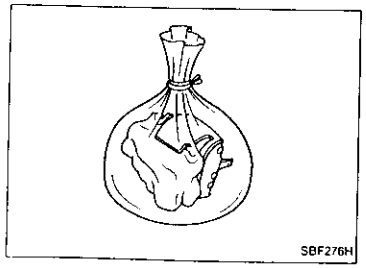

DISPOSING OF AIR BAG MODULE AND SEAT BELT PRE-TENSIONER

Deployed air bag modules and seat belt pre-tensioners are very hot. Before disposing of air bag module, and seat belt pre-tensioner, wait at least 30 minutes, and 10 minutes, respectively. Seal them in a plastic bag before disposal.

CAUTION:

- **Never apply water to a deployed air bag module and seat belt pre-tensioner.**
- **Be sure to wear gloves when handling a deployed air bag module and seat belt pre-tensioner.**
- **No poisonous gas is produced upon air bag module deployment. However, be careful not to inhale gas since it irritates throat and can cause choking.**
- **Do not attempt to disassemble air bag module and seat belt pre-tensioner.**
- **Air bag module and seat belt pre-tensioner can not be re-used.**
- **Wash your hands clean after finishing work.**

Wiring Diagram — SRS —

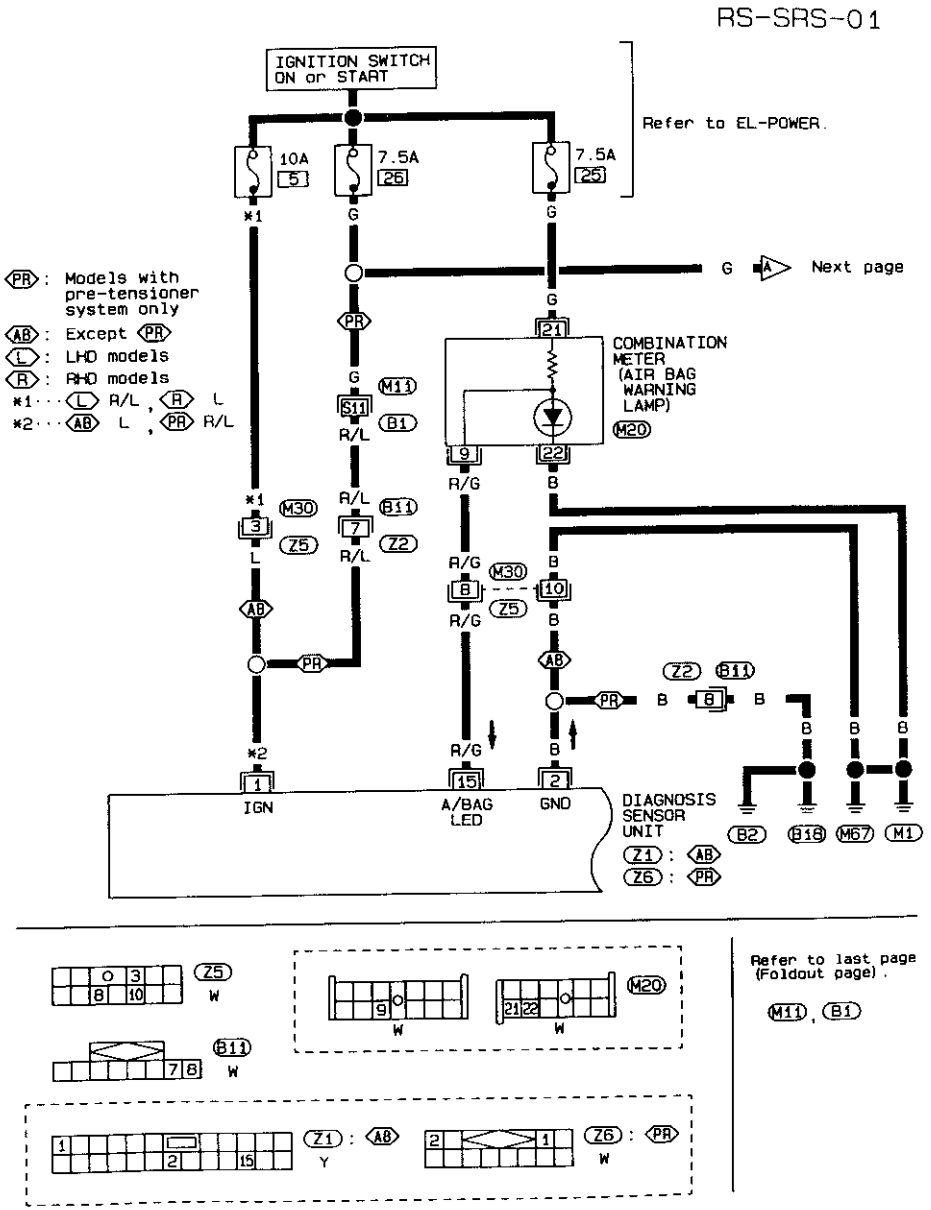

Wiring Diagram — SRS — (Cont'd)

RS-SRS-02

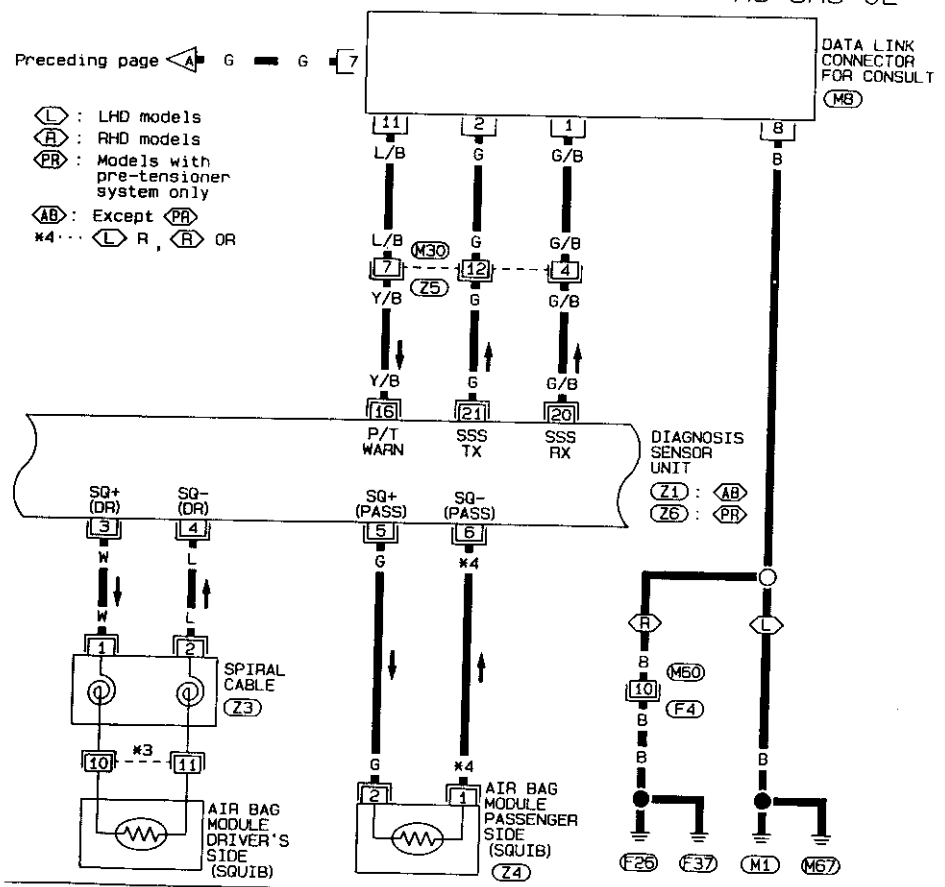

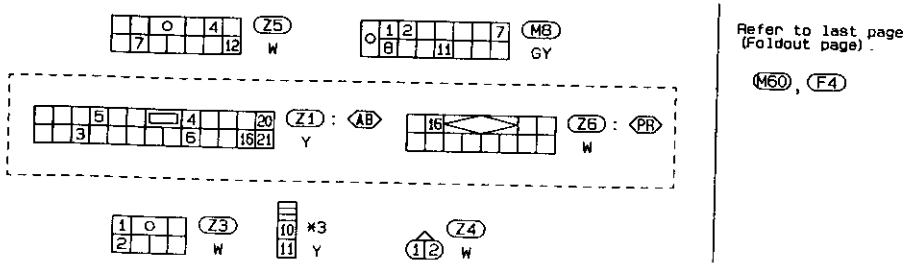

Refer to last page (Foldout page).

M60, F4

SRS008

Wiring Diagram — SRS — (Cont'd)

RS-SRS-03

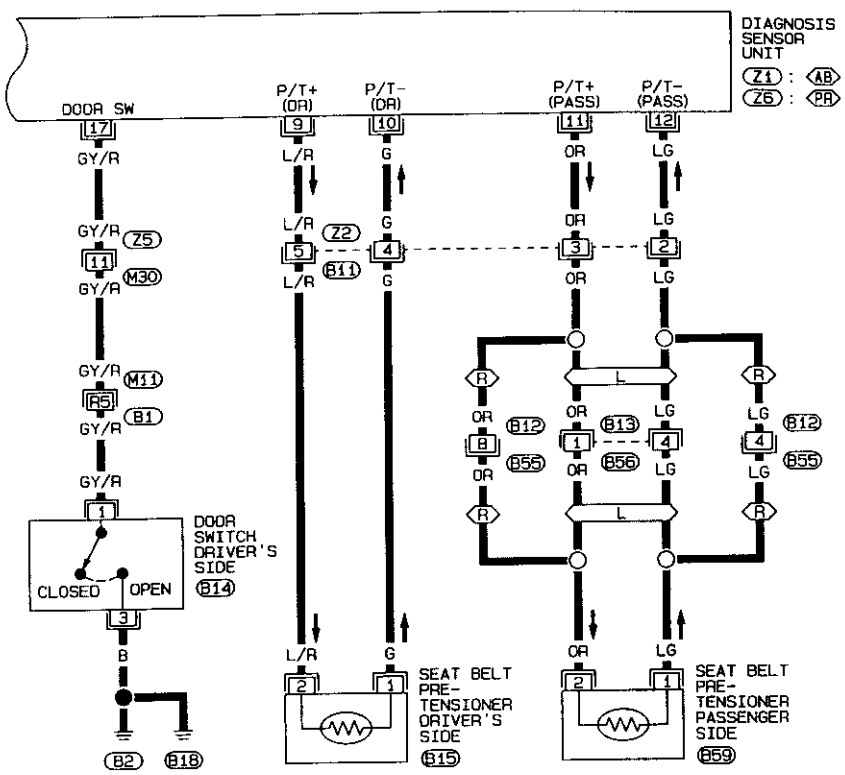

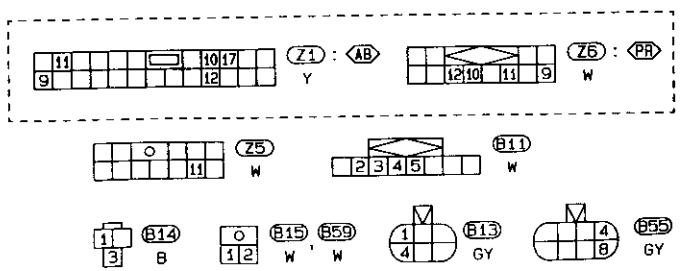

Refer to last page (Foldout page).

M11, B1

SRS009

Schematic

CAUTION:

- **Do not use a circuit tester to check SRS "Air Bag" harness connectors. The wiring harness and connectors have yellow outer insulation for easy identification.**
- **Do not attempt to repair, splice or modify the SRS "Air Bag" wiring harness. If the harness is damaged, replace it with a new one.**
- **Keep ground portion clean.**

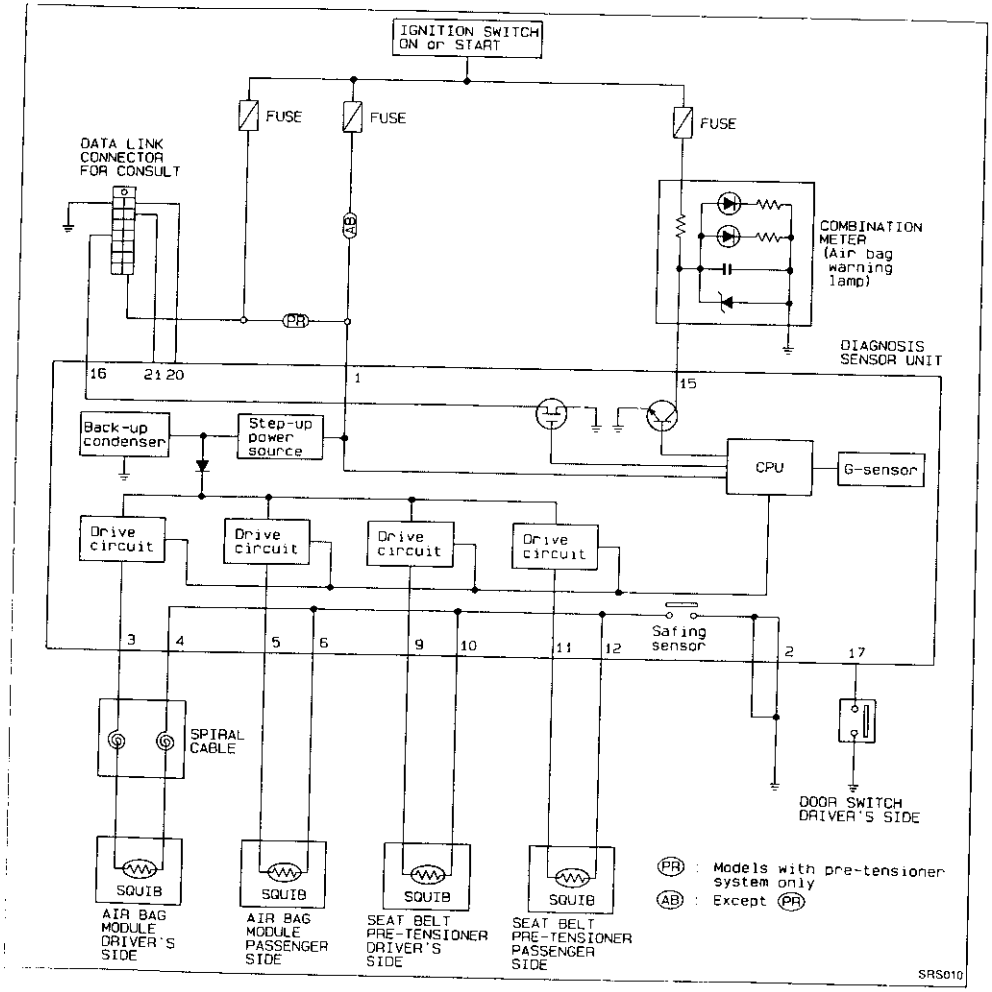

Self-diagnosis

The air bag and seat belt pre-tensioner can be put under self-diagnosis by the following methods.

		USING CIRCUIT TESTER	USING CONSULT	USING "AIR BAG" WARNING LAMP
		RS-21	RS-22	RS-24
For Europe	Seat belt pre-tensioner (Standard equipment)	○		
	Equipped with driver air bag			○
	Equipped with driver air bag and passenger air bag			○
Except for Europe	Equipped with driver air bag		○	○
	Equipped with driver air bag and passenger air bag			○
For Australia			○	○

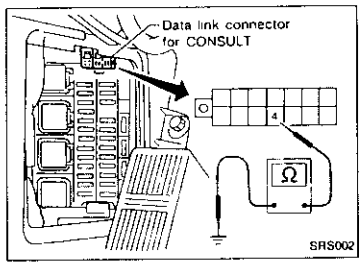

USING CIRCUIT TESTER

Seat belt pre-tensioner self-diagnosis results can be read by using a circuit tester as follows:

1. Measure resistance between data link connector for CONSULT and body ground.

2. Visually check the oscillation of circuit tester needle.

① Normal

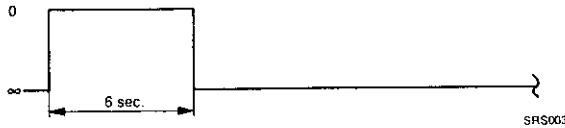

No problem.
The seat belt pre-tensioner is in good order

② Malfunction (including when seat belt pre-tensioner is deployed)

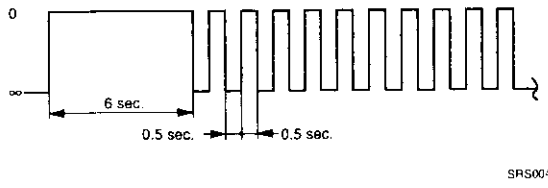

- Seat belt pre-tensioner circuit is open or shorted to some power supply circuit, or shorted to ground
1. Visually check wiring harness connections.
2. Replace seat belt assembly. (Before disposing, it must be deactivated)
3. Replace diagnosis sensor unit
4. Replace air bag harness
5. Replace main harness.

(Recheck seat belt pre-tensioner using circuit tester at each replacement.)

Self-diagnosis (Cont'd)

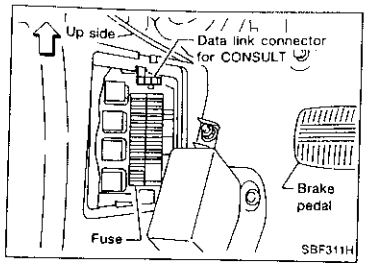

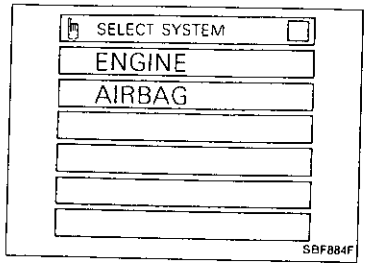

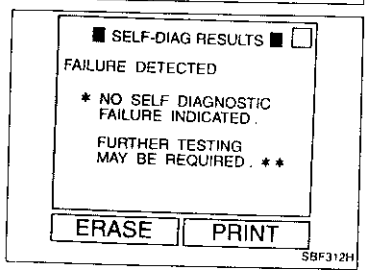

USING CONSULT

The self-diagnosis results can be read by CONSULT, as follows:

1. Connect "CONSULT" to data link connector for CONSULT. (Data link connector for CONSULT is located in left or right dash side panel.)
2. Turn ignition switch to "ON". (When CONSULT is connected, the "AIR BAG" warning lamp will be turned to present diagnosis mode.)
3. Touch "START" to operate "CONSULT".
4. Touch "AIR BAG" to choose air bag system.
5. Touch "SELF DIAG RESULTS" to read self-diagnosis results.
6. Problem codes are displayed on "SELF DIAG RESULTS".
7. When "PRINT" is pressed, information displayed on "SELF DIAG RESULTS" is printed out.

WARNING:

- **While CONSULT is displaying this "SELF-DIAG RESULTS" information, do not disconnect CONSULT from data link connector.**
- **When finishing diagnosis, make sure to change CONSULT display to SELECT SYSTEM mode by using BACK KEY.**

8. After repairing malfunctioning parts, press "ERASE" to clear self-diagnosis results.
   - **"ERASE" function requires selecting "ERASE", and completing step 9.**
9. Push BACK KEY of CONSULT until SELECT SYSTEM mode appears to make "SELF-DIAGNOSIS" user mode.
   - **If malfunctioning parts are not completely repaired, "AIR BAG" warning lamp will blink every 0.5 seconds.**
10. Push the power off switch.
11. Turn off ignition switch, disconnect CONSULT.
12. Turn ignition switch to "ON".
    "AIR BAG" warning lamp should come on for about 7 seconds and then go off.

Self-diagnosis (Cont'd)

Self-diagnosis results

Diagnostic item	Explanation/Possible causes	Repair order * Recheck SRS using CONSULT at each replacement.
NO SELF DIAGNOSTIC FAILURE INDICATED.	• Normal. SRS system is in good order	—
AIRBAG MODULE [OPEN]	• Driver's air bag module circuit is open (including the spiral cable).	1. Visually check wiring harness connections 2. Replace spiral cable. 3. Replace driver's air bag module. (Before disposing of it, it must be deployed.) 4. Replace diagnosis sensor unit. 5. Replace air bag harness. 6. Replace main harness
AIRBAG MODULE [VB-SHORT]	• Driver's air bag module circuit is shorted to some power supply circuit (including the spiral cable).	
AIRBAG MODULE [GND-SHORT]	• Driver's air bag module circuit is shorted to ground (including the spiral cable).	
AIRBAG MODULE [SHORT]	• Driver's air bag module circuits are shorted to each other.	
ASSIST A/B MODULE*1 [OPEN]	• Front passenger air bag module circuit is open.	1. Visually check wiring harness connections 2. Replace front passenger air bag module. (Before disposal of it, it must be deployed.) 3. Replace diagnosis sensor unit. 4. Replace air bag harness. 5. Replace main harness.
ASSIST A/B MODULE*1 [VB-SHORT]	• Front passenger air bag module circuit is shorted to some power supply circuit.	
ASSIST A/B MODULE*1 [GND-SHORT]	• Front passenger air bag module circuit is shorted to ground.	
ASSIST A/B MODULE*1 [SHORT]	• Front passenger air bag module circuits are shorted to each other.	
CONTROL UNIT	• Diagnosis sensor unit is out of order.	1. Visually check wiring harness connections. 2. Replace diagnosis sensor unit. 3. Replace air bag harness. 4. Replace main harness.
INDEFINITE FAILURES [AIR BAG]	• A problem which cannot be specified occurs because more than two parts are out of order	1. Visually check wiring harness connections 2. Replace diagnosis sensor unit. 3. Replace spiral cable and air bag modules. 4. Replace air bag harness. 5. Replace main harness.

*1: For Australia model only

Self-diagnosis (Cont'd)

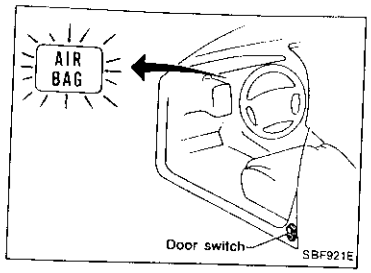

USING "AIR BAG" WARNING LAMP

Air bag self-diagnosis results can be read by using the "AIR BAG" warning lamp.
The "Air bag" warning lamp operates as shown below:

WARNING:
When the "AIR BAG" warning lamp is flashing, compare the flash time to the chart below.

How to alternate self-diagnosis

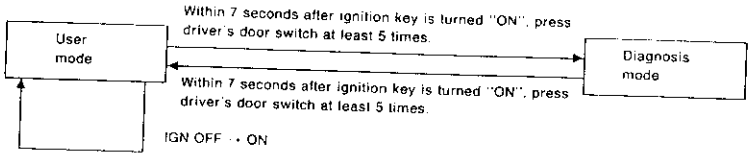

Problem codes are displayed in diagnosis mode (self-diagnosis results).

Warning lamp indication

- **After repairing malfunctioning part, use driver's door switch to return the system to user mode. This will clear self-diagnosis results from memory.**
- **If a malfunctioning part is not completely repaired, self-diagnosis results will not be cleared.**

User mode

① Normal (OFF) IGN ON Light check ON OFF 7 sec. SBF298H	No problem.
② Malfunction (blinking) ON OFF 0.5 sec. 0.5 sec. SBF299HA	The system has problem. Perform self-diagnosis with "Diagnosis mode".
③ Air bag is deployed or diagnosis sensor unit is malfunctioning and continuously sends an "ON" signal ON OFF SBF284HA	The system needs to be repaired. (Refer to page RS-26.)

Self-diagnosis (Cont'd)

Diagnosis mode (Self-diagnosis result)

- Indicate malfunctioning part — The system needs to be repaired.

ⓑ Start signal; Start signal identifies display modes

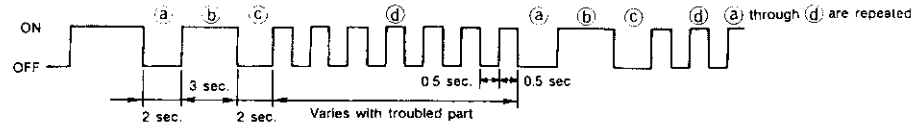

SBF300H

- No malfunctioning (or intermittent trouble/repair completion)

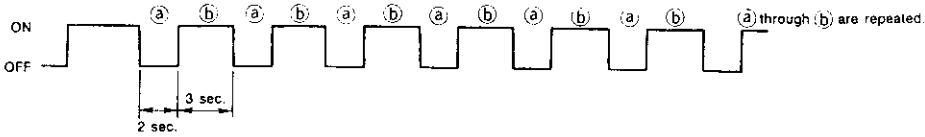

SBF285H

WARNING:

- **After the malfunctioning parts have been repaired, return the system to "User mode".**

Self-diagnosis results in diagnosis mode can be identified by number of flashes ⓓ. Refer to Table on next page for troubled parts.

Self-diagnosis (Cont'd)

Warning lamp flashing times and repair

Warning lamp	Flash code (#) (# of flashes)	Explanation/Possible causes	Repair order * Recheck SRS at each replacement
"AIR BAG" warning lamp	0	• Normal. SRS "Air Bag" is in good order.	—
	2	• Driver's air bag module circuit is out of order.	1. Visually check wiring harness connections. 2. Replace spiral cable. 3. Replace driver's air bag module. (Before disposal of it, it must be deployed.) 4. Replace diagnosis sensor unit. 5. Replace air bag harness. 6. Replace main harness.
	7	• Diagnosis sensor unit is out of order	1. Visually check wiring harness connections. 2. Replace diagnosis sensor unit. 3. Replace air bag harness. 4. Replace main harness.
	8	• Front passenger air bag module circuit is out of order.	1. Visually check wiring harness connections. 2. Replace front passenger air bag module. (Before disposal, it must be deployed.) 3. Replace diagnosis sensor unit. 4. Replace air bag harness. 5. Replace main harness.
	9	• More than two parts groups are out of order.	1. Visually check wiring harness connections. 2. Replace diagnosis sensor unit. 3. Replace all sensors, spiral cable and air bag module. 4. Replace air bag harness. 5. Replace main harness.

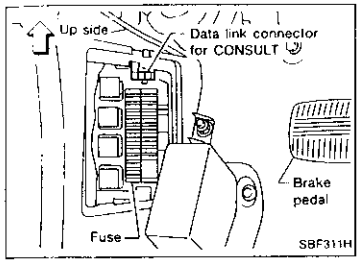

Diagnostic Procedure 1

SYMPTOM: "AIR BAG" warning lamp flashes.
WARNING:
Determine if the flash rate is every 0.5 seconds, or 3 seconds "ON" and 2 seconds "OFF".
If every 0.5 seconds, perform self-diagnosis.
If 3 seconds "ON" and 2 seconds "OFF", the system is in Present diagnosis mode, refer to page RS-24 for instructions.

Connect the CONSULT and operate it. Read the "SELF-DIAGNOSIS RESULTS". (Refer to page RS-22.) → Refer to SELF-DIAGNOSIS RESULTS and repair.

— OR —

Diagnosis using warning lamp. (Refer to page RS-24.) → Refer to the number of warning lamp flashes. Repair as necessary.

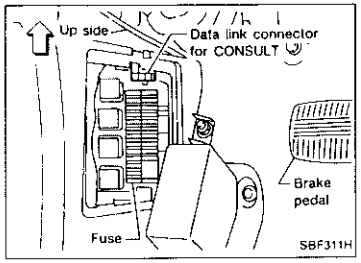

Diagnostic Procedure 2

SYMPTOM: "AIR BAG" warning lamp does not come on.

1. Check 7.5A fuse (No. 25, located in fuse block). — NG → Replace the fuse.
   ↓ OK
2. Connect the CONSULT unit and begin diagnosis. • Is "AIR BAG" displayed on the CONSULT screen? — NG → Replace the diagnosis sensor unit.
   ↓ OK
3. Read the SELF-DIAGNOSIS RESULTS. — NG → Refer to SELF-DIAGNOSIS RESULTS and repair.
   ↓ OK
4. Check the warning lamp bulb. — NG → Replace the warning lamp bulb
   ↓ OK
5. Check the warning lamp harness connection. — NG → Replace the harness.
   ↓ OK
6. Replace the diagnosis sensor unit.

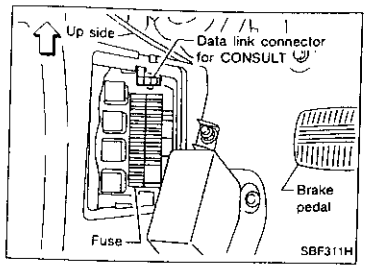

Diagnostic Procedure 3

SYMPTOM: Warning lamp does not go off.

1. Is the air bag module deployed?
   - Yes → Replace the air bag module
   - No ↓
2. Check 10A fuse No. [5] and 7.5A fuse No. [26].
   - NG → Replace the fuse.
   - OK ↓
3. Connect the CONSULT unit and operate it.
   - Is "AIR BAG" displayed on the CONSULT?
   - NG → Replace the diagnosis sensor unit.
   - OK ↓
4. Read the SELF-DIAGNOSIS RESULTS.
   - NG → Refer to SELF-DIAGNOSIS RESULTS and repair.

   — OR —

   Refer to the warning lamp self-diagnosis.
   - NG → Refer to the warning lamp flashing times and repair as necessary.
   - OK ↓
5. Check the harness connection between the warning lamp and the diagnosis sensor unit.
   - NG → Replace the harness.
   - OK ↓
6. Replace the diagnosis sensor unit.

Collision Diagnosis

To repair the SRS, perform the following steps.

When air bag deploys in a collision:

① Replace the diagnosis sensor unit.
② Remove the air bag modules and seat belt pre-tensioners.
③ Check the SRS components using the table shown below:
- Replace any SRS components showing visible signs of damage (dents, cracks, deformation).

④ Conduct self-diagnosis. Refer to "Self-diagnosis" for details (RS-21). Ensure the remainder of the SRS is operating properly.
⑤ Install new air bag modules.
⑥ Conduct self-diagnosis again.

When air bag does not deploy in a collision:

① Check the SRS components using the table shown below:
- Replace any SRS components showing visible signs of damage (dents, cracks, deformation).

② Conduct self-diagnosis. Refer to "Self-diagnosis" for details (RS-21). Ensure entire SRS operates properly.

SRS inspection

Part	Air bag deployed	Air bag did NOT deploy
Air bag module (driver and passenger side)	REPLACE Install with new bolts.	1. Remove air bag module. Check harness cover and connectors for damage, terminals for deformities, and harness for binding. 2-1. Install driver air bag module into the steering wheel to check fit and alignment with the wheel. 2-2. Install passenger air bag module into the instrument panel to check fit with the instrument panel. 3. No damage found, reinstall with new bolts. 4. If damaged—REPLACE. Air bag must be deployed before discarding.
Instrument panel	REPLACE Install with new bolts.	1. Check instrument panel for bending, deformities, or cracks. 2. If no damage is found, reinstall with new bolts. 3. If damaged—REPLACE.
Seat belt pre-tensioner assembly	REPLACE Install with new bolts.	1. Remove seat belt pre-tensioners. Check harness cover and connectors for damage, terminals for deformities, and harness for binding. 2. Check belts for damage and anchors for loose mounting. 3. Check retractor for smooth operation. 4. If no damage is found, reinstall with new bolts. 5. If damaged—REPLACE.
Diagnosis sensor unit	REPLACE Install with new bolts.	1. Check case and bracket for dents, cracks or deformities. 2. Check connectors for damage, and terminals for deformities. 3. If no damage is found, reinstall with new bolts. 4. If damaged—REPLACE.
Steering wheel	1. Check harness (built into steering wheel) and connectors for damage, and terminals for deformities. 2. Install air bag module to check fit or alignment with steering wheel. 3. Check steering wheel for excessive free play. 4. If no damage is found, reinstall with new bolts. 5. If damaged—REPLACE.	
Spiral cable	1. Visually check lock (engagement) pins and combination switch for damage. 2. Check connectors, flat cable and protective tape for damage. 3. Check steering wheel for noise, binding or heavy operation. 4. If no damage is found, reinstall with new bolts. 5. If damaged—REPLACE.	
Harness and Connectors	1. Check connectors for poor connection, damage, and terminals for deformities. 2. Check harness for binding, chafing, cuts, or deformities. 3. If no damage is found, reinstall. 4. Damaged—REPLACE damaged section of harness. Do not attempt to repair, splice or modify any SRS harness.	

SECTION BT

CONTENTS

GENERAL SERVICING 2
- Precautions 2
- Supplemental Restraint System (SRS) "AIR BAG" and "SEAT BELT PRE-TENSIONER" 2
- Clip and Fastener 3

BODY END 6
- Body Front End 6
- Body Rear End and Opener 8

DOOR 10
- Door Glass Fitting Adjustment 11

INSTRUMENT PANEL 14
INTERIOR TRIM 17
EXTERIOR TRIM 22
SEAT 27
- Front Seat 27
- Rear Seat 30

SUN ROOF 31
WINDSHIELD AND WINDOWS 35
- Windshield and Rear Window 35
- Side Window 36

DOOR MIRROR 37
FRONT AND REAR AIR SPOILER 38
- Front Air Spoiler 38
- Rear Air Spoiler 38

BODY ALIGNMENT 39
- Engine Compartment 39
- Underbody 41

★ **For seat belt, refer to MA and RS sections.**
★ **For body electrical systems, refer to EL section.**

Precautions

- When removing or installing various parts, place a cloth or padding onto the vehicle body to prevent scratches.
- Handle trim, molding, instruments, grille, etc. carefully during removing or installation. Be careful not to soil or damage them.
- Apply sealing compound where necessary when installing parts.
- When applying sealing compound, be careful that the sealing compound does not protrude from parts.
- When replacing any metal parts (for example body outer panel, members, etc.), be sure to take rust prevention measures.

Supplemental Restraint System (SRS) "AIR BAG" and "SEAT BELT PRE-TENSIONER"

The Supplemental Restraint System "Air Bag" and "Seat Belt Pre-tensioner", used along with a seat belt, help to reduce the risk or severity of injury to the driver and front passenger in a frontal collision. The Supplemental Restraint System consists of air bag modules (located in the center of the steering wheel and on the instrument panel on the passenger side), seat belt pre-tensioners, a diagnosis sensor unit, warning lamp, wiring harness and spiral cable. Information necessary to service the system safely is included in the **RS section** of this Service Manual.

WARNING:

- **To avoid rendering the SRS inoperative, which could increase the risk of personal injury or death in the event of a collision which would result in air bag inflation, all maintenance must be performed by an authorized NISSAN dealer.**
- **Improper maintenance, including incorrect removal and installation of the SRS, can lead to personal injury caused by unintentional activation of the system.**
- **All SRS air bag electrical wiring harnesses and connectors are covered with yellow outer insulation. Do not use electrical test equipment on any circuit related to the SRS.**

Clip and Fastener

- Clips and fasteners in BT section correspond to the following numbers and symbols.
- Replace any clips and/or fasteners which are damaged during removal or installation.

Symbol No.	Shapes	Removal & Installation
C101	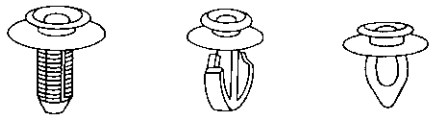 SBF302H	**Removal:** Remove by bending up with flat-bladed screwdrivers or clip remover. SBF367BA
C103	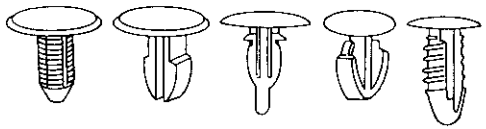 SBF303H	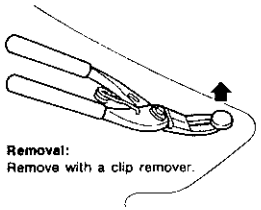 **Removal:** Remove with a clip remover. SBF423H
C203	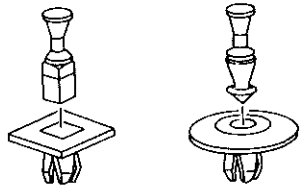 SBF258G	Push center pin to catching position. (Do not remove center pin by hitting it.) Push Push **Installation:** SBF708E
C205	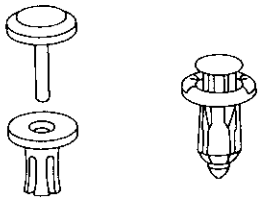 MBF518B	**Removal:** 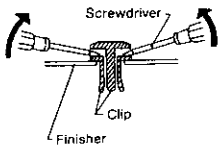 Screwdriver Clip Finisher SBF638C

Clip and Fastener (Cont'd)

Symbol No.	Shapes	Removal & Installation
C206	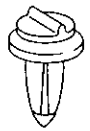 MBF519B	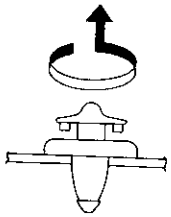 MBF520B
CE103	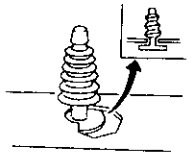 SBF104B	**Removal:** 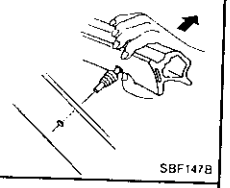 SBF147B
CE106	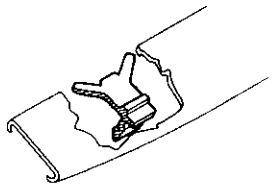 SBF653B	**Removal:** **Type 1** ② Then bend up ① Push Clip Molding 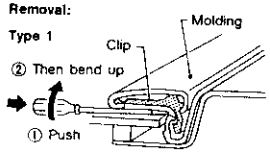 SBF654B **Type 2** Remove molding by cutting off the clip. Clip Molding Cutter 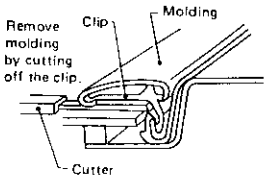 SBF914B
CR103	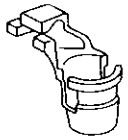 SBF768B	**Removal:** Holder portion of clip must be spread out to remove rod. 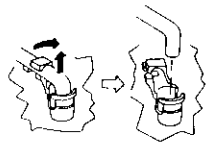 SBF770B

Clip and Fastener (Cont'd)

Symbol No.	Shapes	Removal & Installation
CS101	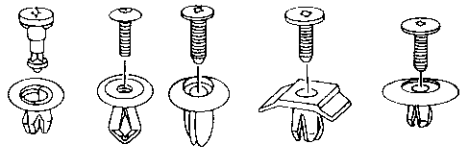 SBF078B	**Removal:** 1. Screw out with a Phillips screwdriver. 2. Remove female portion with flat-bladed screwdriver 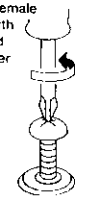 SBF992G

Body Front End

- When removing or installing hood, place a cloth or other padding on hood. This prevents vehicle body from being scratched.
- Bumper fascia is made of plastic. Do not use excessive force and be sure to keep oil away from it.
- Hood adjustment: Adjust at hinge portion.
- Hood lock adjustment: After adjusting, check hood lock control operation. Apply a coat of grease to hood locks engaging mechanism.
- Hood opener: Do not attempt to bend cable forcibly. Doing so increases effort required to unlock hood.

REMOVAL — Front bumper assembly

① Remove bolts securing bumper fascia to engine undercover.
② Remove screws and clips (C203) securing left and right sides of front fender protector. Then remove the front fender protector.
③ Remove clips (CS101) securing front grille, then remove the front grille.
④ Remove clip (C205) securing bumper fascia bracket to hood lock stay A.
⑤ Remove screws located at wheel opening.
⑥ Remove the screw securing each side of front clearance lamp assembly, then remove the front clearance lamp assembly.
⑦ Remove the screw securing each side of front turn signal lamp assembly. Then remove the front turn signal lamp assembly.
⑧ Remove bolts securing each side of front fender bracket.
⑨ Remove nuts securing left and right front fenders to bumper fascia bracket B.
⑩ Remove nuts and bolts securing bumper assembly to front side member.
⑪ Extract bumper assembly.
⑫ Remove bolts securing bumper fascia bracket to bumper fascia.
⑬ Disassemble bumper fascia and bumper fascia bracket.

Body Front End (Cont'd)

SEC. 260·261·262·263· 620·623·630·650·747

Hood lock adjustment
- Adjust hood so that hood primary lock meshes at a position 1 to 1.5 mm (0.039 to 0.059 in) lower than fender.
- After hood lock adjustment, adjust bumper rubber
- When securing hood lock, ensure it does not tilt. Striker must be positioned at the center of hood primary lock.
- After adjustment, ensure that hood primary and secondary lock operate properly.

Hood lock secondary latch hooking length

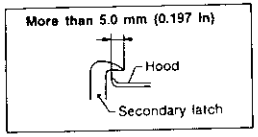

Bumper rubber adjustment
- Adjust so that hood is aligned with fender. At that time deflection is approx. 2 mm (0.08 in).

[Bumper rubber free height is approx. 13 mm (0.51 in).]

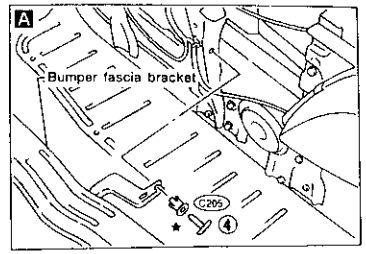

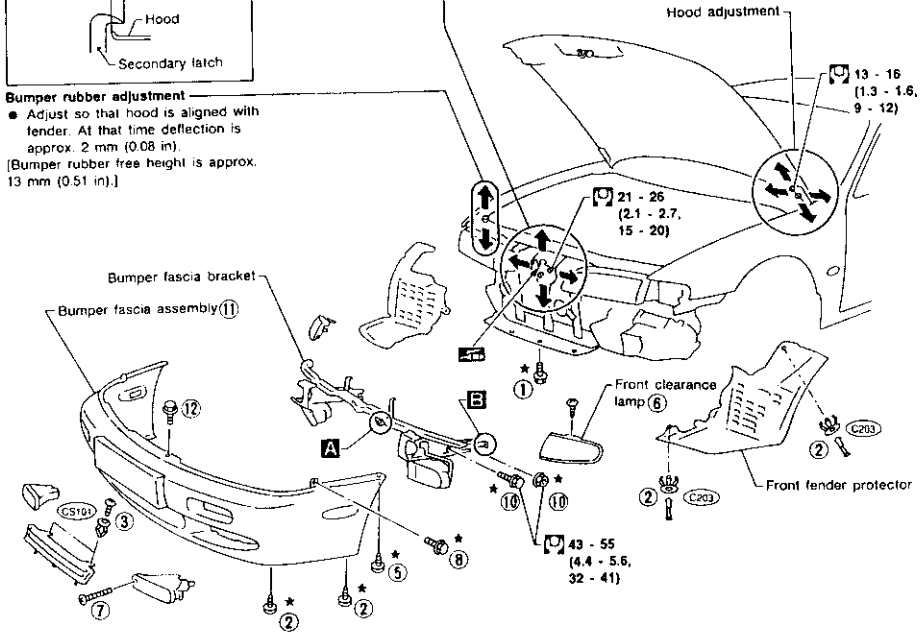

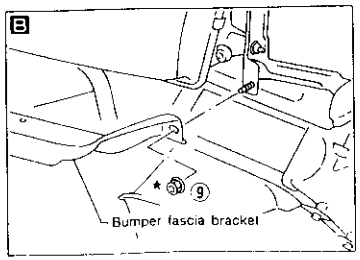

★ Bumper assembly mounting bolts, nuts and clips
: N·m (kg-m, ft-lb)

MBF527B

Body Rear End and Opener

- When removing or installing trunk lid, place a cloth or other padding on trunk lid. This prevents vehicle body from being scratched.
- Trunk lid adjustment: Adjust at hinge-trunk lid portion for proper trunk lid fit.
- Trunk lid lock system adjustment: Adjust striker so that it is in the center of the lock. After adjustment, check trunk lid lock operation.
- Opener cable: do not attempt to bend cable using excessive force.
- After installation, make sure that trunk lid and fuel filler lid open smoothly.

REMOVAL — Rear bumper assembly

① Remove trunk trim. Refer to "TRUNK ROOM TRIM" in "INTERIOR TRIM" for details. (BT-21)
② Remove clips (CS101) securing rear panel upper to bumper fascia.
③ Remove clips (CS101) securing rear panel lower to bumper fascia.
④ Remove bolts from lower side of each side bumper.
⑤ Working inside trunk, remove nuts securing left and right rear fenders to bumper fascia G .
⑥ Extract bumper assembly H .

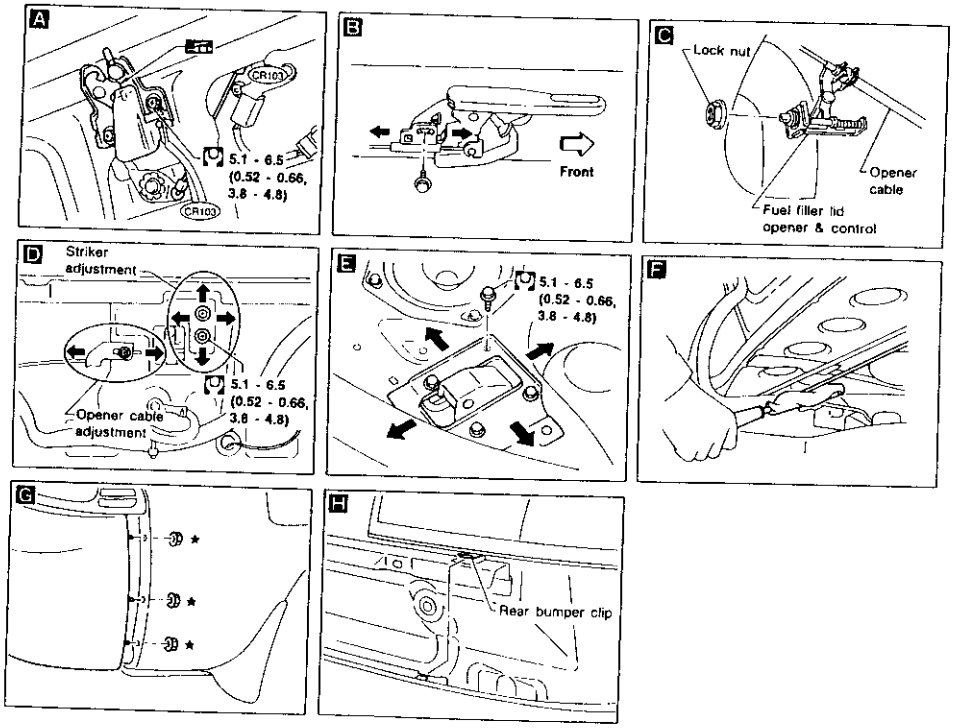

N·m (kg-m, ft-lb)

Body Rear End and Opener (Cont'd)

SEC. 843•850

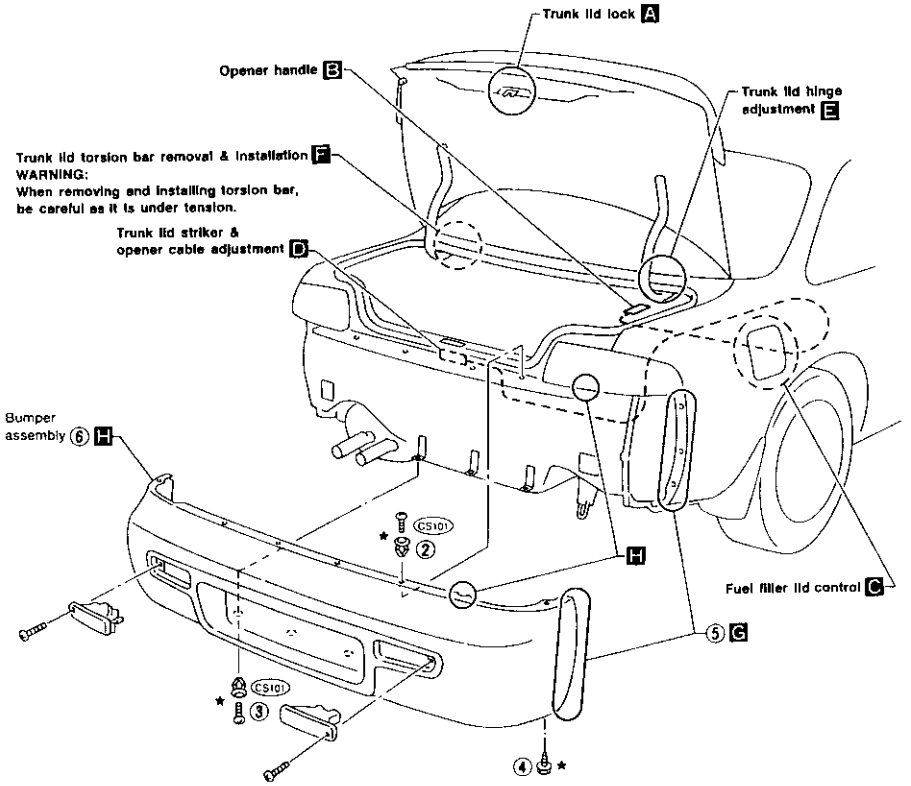

★ Bumper assembly mounting bolts, nuts and clips

MBF528B

- For removal of door trim, refer to "DOOR TRIM" in "INTERIOR TRIM" for details (BT-19).
- After adjusting door or door lock, check door lock operation.

SEC. 800•803•805

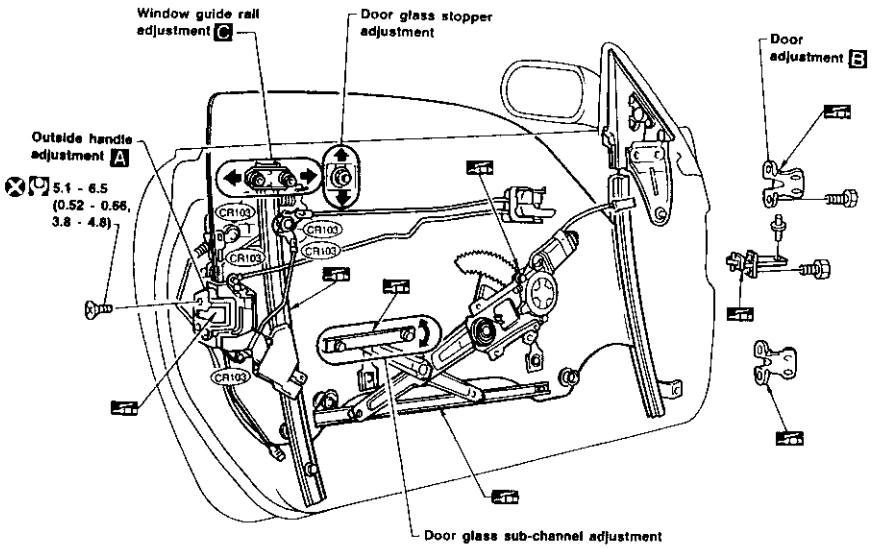

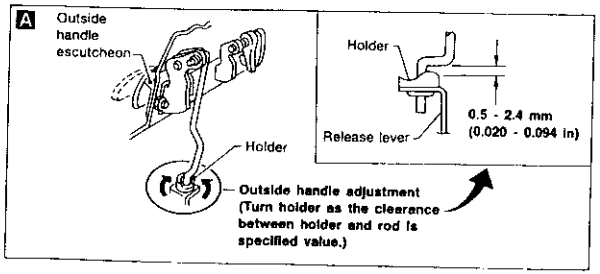

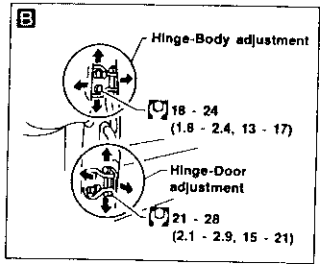

Striker adjustment

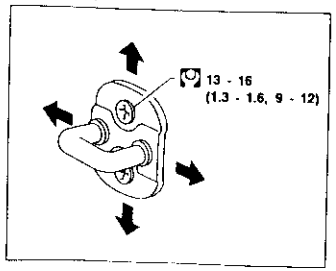

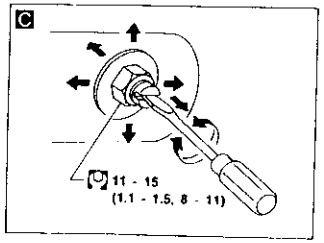

N•m (kg-m, ft-lb)

MBT042A

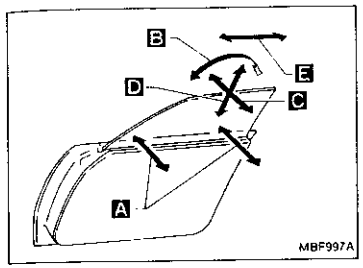

MBF997A

Door Glass Fitting Adjustment

The door glass is properly adjusted using the following five methods:

- A In-out adjustment (at the glass waist)
- B Fore-aft tilt adjustment
- C In-out tilt adjustment (at the glass upper stop)
- D Up-stop adjustment
- E Fore-aft adjustment

NOTICE:

When adjusting the door glass, it is not necessary to remove the outside door molding.

Adjustment locations

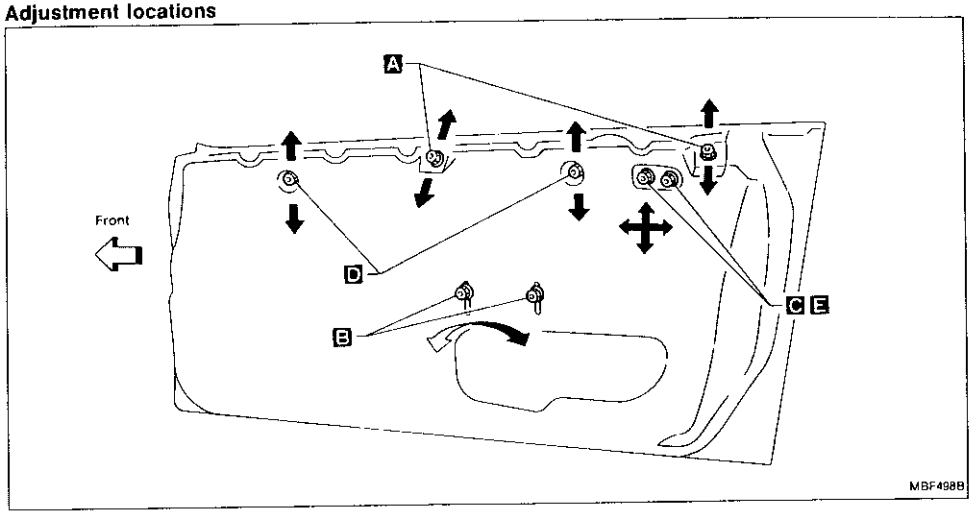

MBF498B

Adjustment standard clearance

SEC. 803

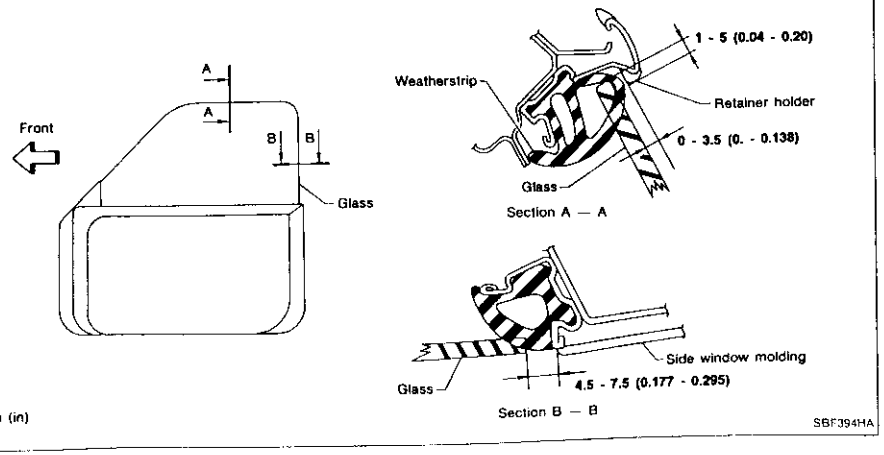

SBF394HA

Door Glass Fitting Adjustment (Cont'd)

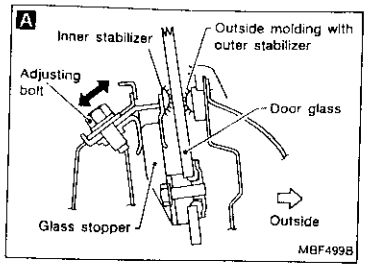

A IN-OUT ADJUSTMENT (at the glass waist)

1. Raise door glass until glass stopper is in contact with inner stabilizer, just before the window stops.
2. Loosen adjusting bolts.
3. Lightly press door glass upper end outward so that glass outer surface contacts outer stabilizer. With glass held in that position, press inner stabilizer to glass inner surface and tighten adjusting bolt.

CAUTION:

Make sure nap portions of stabilizers are clean and free from oil, grease, etc.

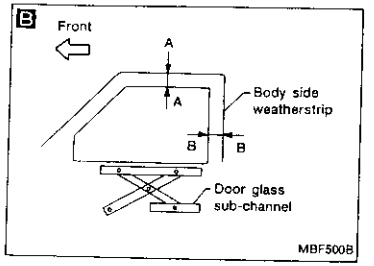

B FORE-AFT TILT ADJUSTMENT

- Adjust door glass sub-channel so that the adjustment standard clearances A – A and B – B (Refer to BT-11) are obtained at the glass and retainer holder/body side weatherstrip locations.

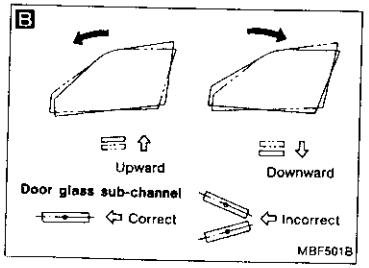

- For sub-channel adjustment procedures, refer to figure at left as a guide.

CAUTION:

- **Make sure door glass sub-channel is horizontal.**
- **The fore-aft tilt adjustment must be made at the same time the fore-aft adjustment E is made.**

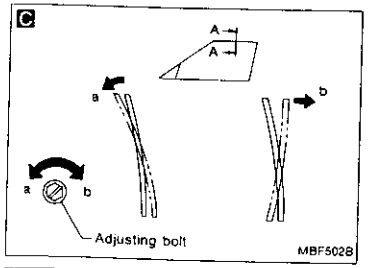

C IN-OUT TILT ADJUSTMENT (at glass upper stop)

1. Adjust door glass-to-holder clearance to 0 to 3.5 mm (0 to 0.138 in) (A) with the adjusting bolts.

CAUTION:

- **Turn adjusting bolt clockwise to move door glass upper end outward.**
- **Turn adjusting bolt counterclockwise to move door glass upper end inward.**

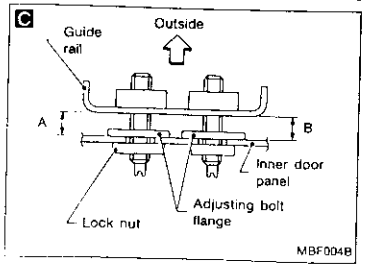

- For sub-channel adjustment procedures, refer to figure at left as a guide.

CAUTION:

- **Make sure door glass sub-channel is horizontal.**
- **The fore-aft tilt adjustment must be made at the same time the fore-aft adjustment E is made.**

Door Glass Fitting Adjustment (Cont'd)

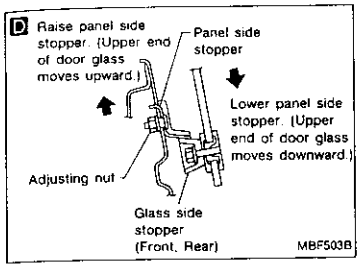

D UP-STOP ADJUSTMENT

1. Adjust panel stopper height so that clearance at upper edge of door meets the adjustment standard clearance A – A (Refer to BT-11). Make sure front and rear glass stoppers lightly contact front and rear panel stoppers, then tighten adjusting nuts.
2. If stoppers do not contact each other, adjust sub-channel nut. Refer to "B Fore-aft tilt adjustment".
3. Open and close doors to make sure upper end of door glass does not contact holder.

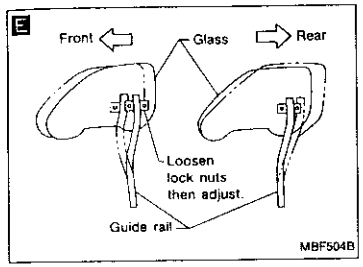

E FORE-AFT ADJUSTMENT

1. Adjust guide rail in the fore-aft direction so that when door is closed or opened the clearance between upper edge of door glass and holder conforms to the adjustment standard clearance A – A (Refer to BT-11).
2. If outer perimeter of door glass interferes with holder when door is opened or closed, refer to "B Fore-aft tilt adjustment" for procedures.

CAUTION:

When loosening guide rail lock nut, prevent adjusting bolt from turning by holding it with a standard screwdriver.

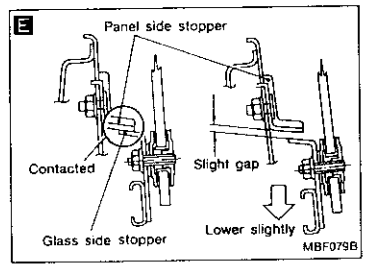

3. Lower the glass slightly until the glass side stopper comes off the panel side stopper.

CAUTION:

Do not lower the glass excessively.

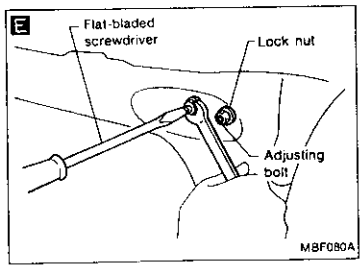

- **After completing door glass adjustment, retighten all lock nuts.**

CAUTION:

While tightening lock nuts, hold adjusting bolts using a standard screwdriver to prevent them from turning.

CAUTION:

- **Disconnect ground terminal from battery in advance.**
- **Disconnect air bag system line in advance.**
- **Never tamper with or force air bag lid open, as this may adversely affect air bag performance.**
- **Be careful not to scratch pad and other parts.**

REMOVAL — Instrument panel assembly

Instrument panel assembly | Combination meter | Audio & A/C control | Glove box

Remove air bag module (driver) and steering wheel. Refer to "SUPPLEMENTAL RESTRAINT SYSTEM" in RS section for details.

① Steering column cover and combination switch
- Remove screws.

② A/T finisher or M/T shift lever boots **A**

③ Instrument lower cover on driver side **B**
- Remove screws.

④ Instrument lower reinforcement
- Remove bolts.

⑤ Cluster lid A **C**
- Remove screws then disconnect harness connectors.

⑥ Combination meter
- Remove screws then disconnect harness connectors.

⑦ Center ventilation assembly **D**
- Pull out with a flat-bladed screwdriver.

⑧ Cluster lid C and audio **E**
- Remove screws

⑨ A/C or heater control
- Remove screws

⑩ Glove box assembly
- Remove screws.

⑪ Console box **F**
- Remove screws then disconnect harness connectors.

⑫ Instrument side finisher **G**

⑬ Defroster grille **H**

⑭ Front pillar garnish
- Refer to "SIDE AND FLOOR TRIM" for details.

⑮ Instrument panel and pads **I**
- Remove bolts.

SEC. 248·487·680·685·969

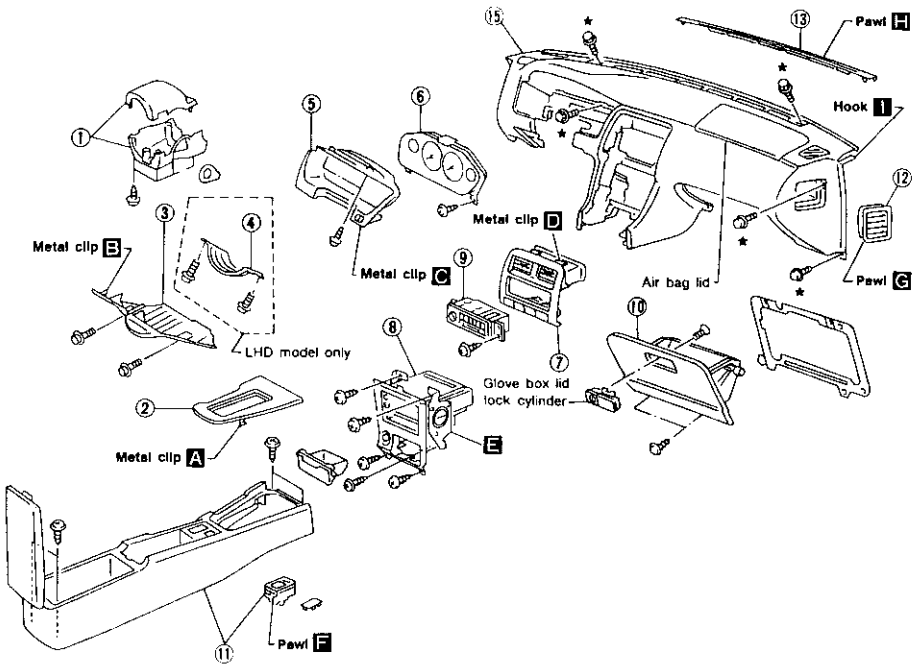

★ : Instrument panel assembly mounting bolts and nuts

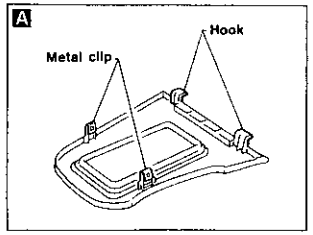

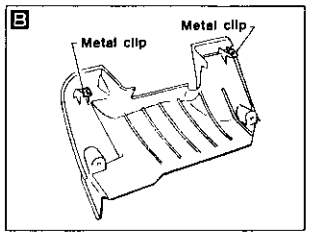

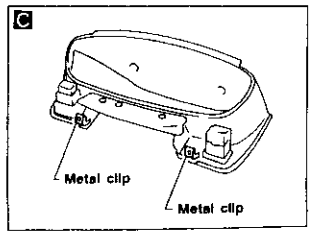

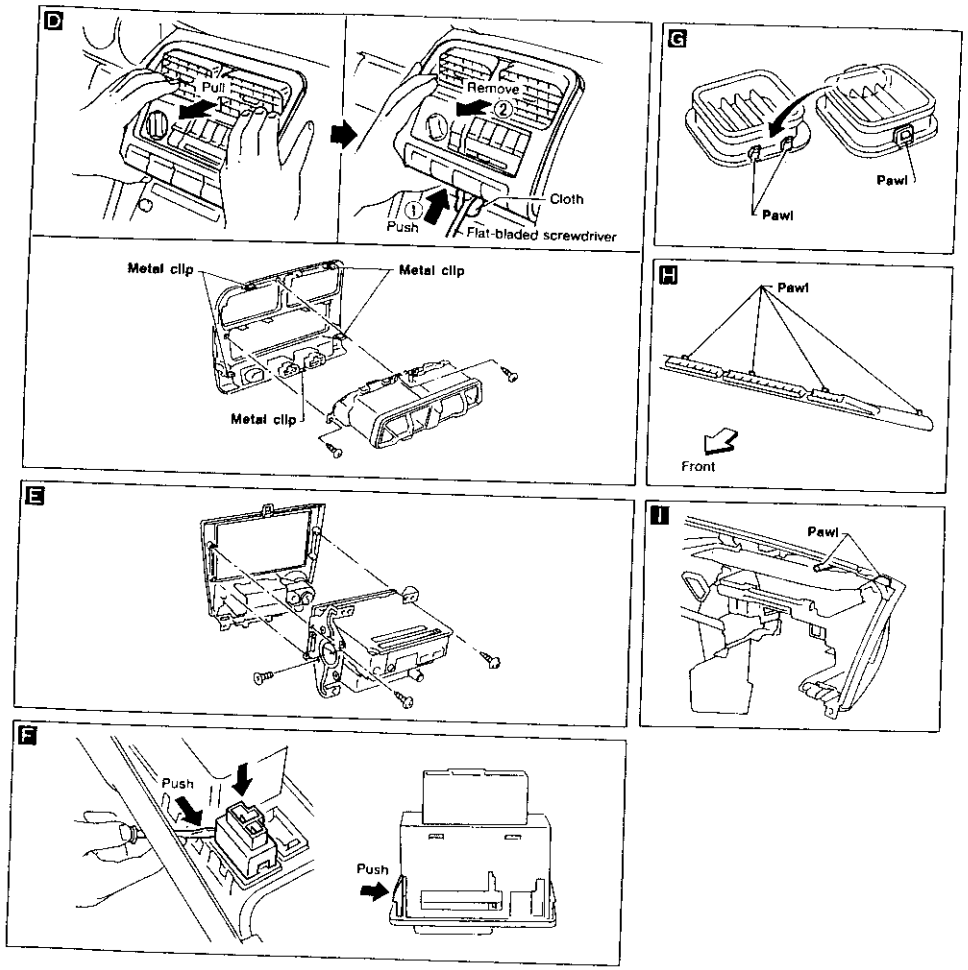

MBF529B

SIDE AND FLOOR TRIM

CAUTION:
Wrap the tip of flat-bladed screwdriver with a cloth when removing metal clips from garnishes.

REMOVAL — Body side trim

① Remove front and rear seat. Refer to "SEAT" for details (BT-27).
② Remove dash side finisher.
③ Remove kicking plate.
④ Remove front pillar garnish.
⑤ Remove rear side finisher.
⑥ Remove rear pillar finisher.
⑦ Remove rear parcel shelf.
⑧ Remove seat back finisher welt. Refer to "TRUNK ROOM TRIM" for details (BT-21).
⑨ Remove seat back finishers (Right, Center, Left).

SEC. 678·749·769·799·809

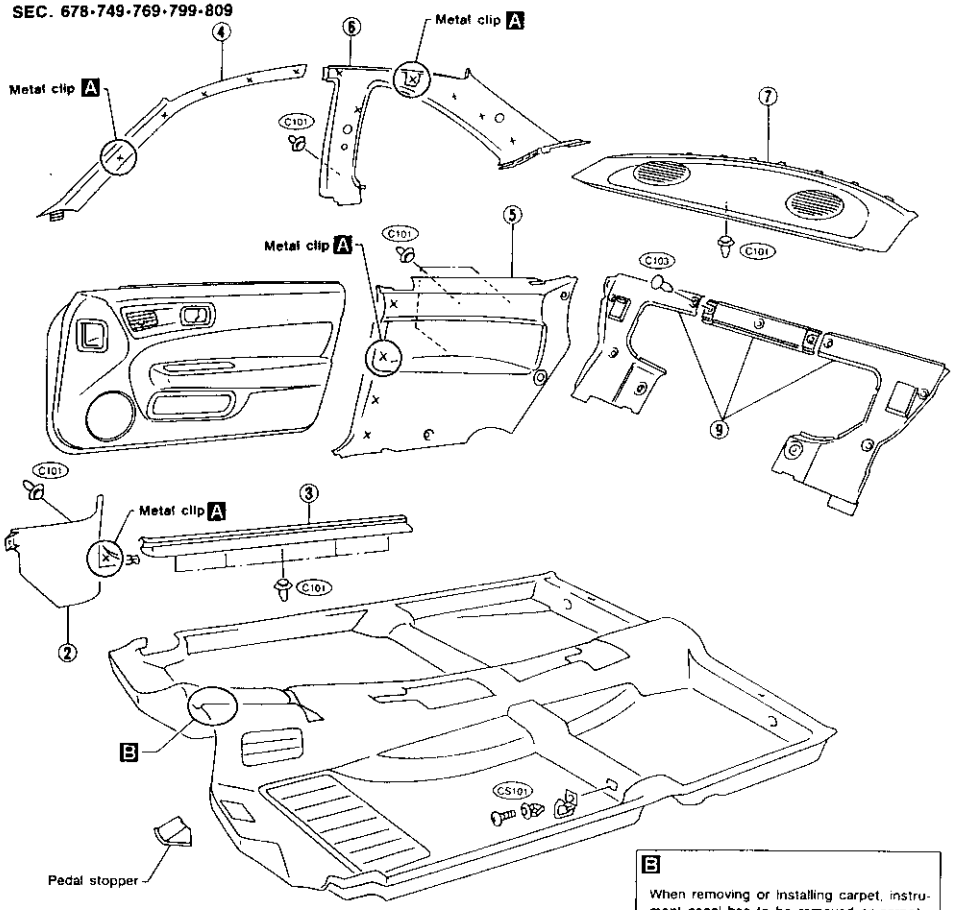

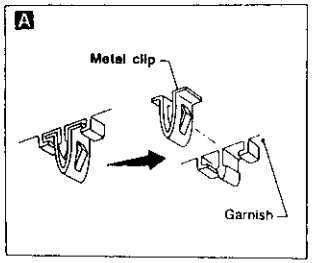

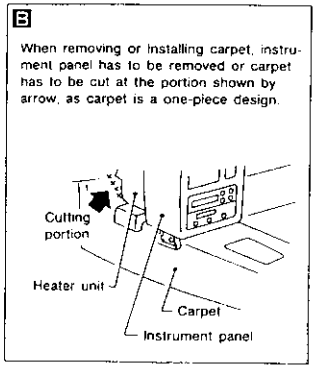

MBF445BA

DOOR TRIM

REMOVAL — Door trim

① Remove screws securing inside handle escutcheon, then remove the inside handle escutcheon A .
② Remove power window switch B .
③ Remove screws securing door finisher.
④ Remove clips (C103) securing door finisher.
⑤ Pull door finisher to remove clips (C101) and metal clips C from door panel and remove door finisher. Disconnect harness connectors.
⑥ Remove ventilator grille and ventilator duct assembly from door finisher D .

SEC. 809

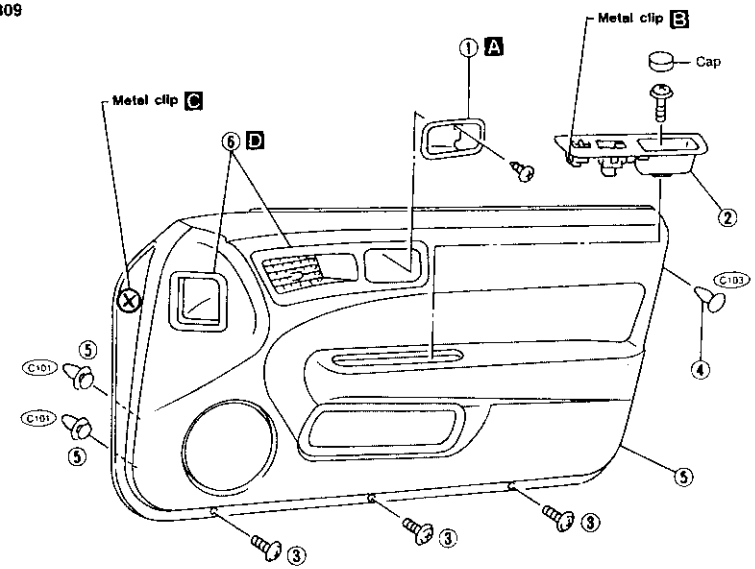

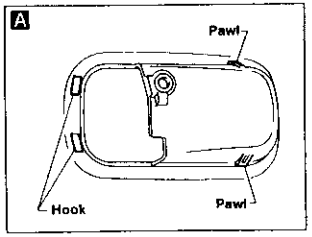

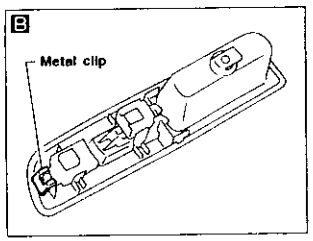

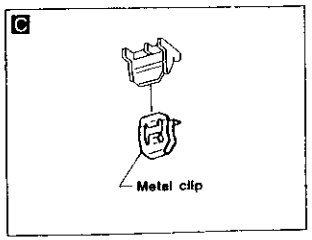

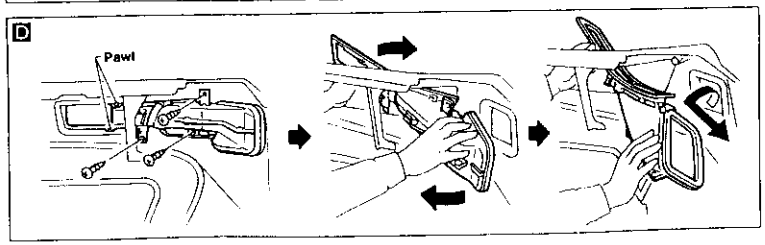

MBF447BA

ROOF TRIM

REMOVAL — Headlining

① Remove rear seat. Refer to "Rear Seat" for details (BT-30).
② Remove seat belt adjuster cover over anchor bolt.
③ Remove front and rear seat belts. Refer to "Seat Belt" in RS section for details.
④ Remove body side trim. Refer to "SIDE AND FLOOR TRIM" for details (BT-17).
⑤ Remove sunroof switch A .
⑥ Remove inside mirror assembly.
⑦ Remove sun visors B .
⑧ Remove interior lamp assembly.
⑨ Remove sunroof welt C .
⑩ Remove clips (C103) securing each side of headlining.
⑪ Remove metal clips securing headlining D .
⑫ Remove headlining.

SEC. 738-963-964

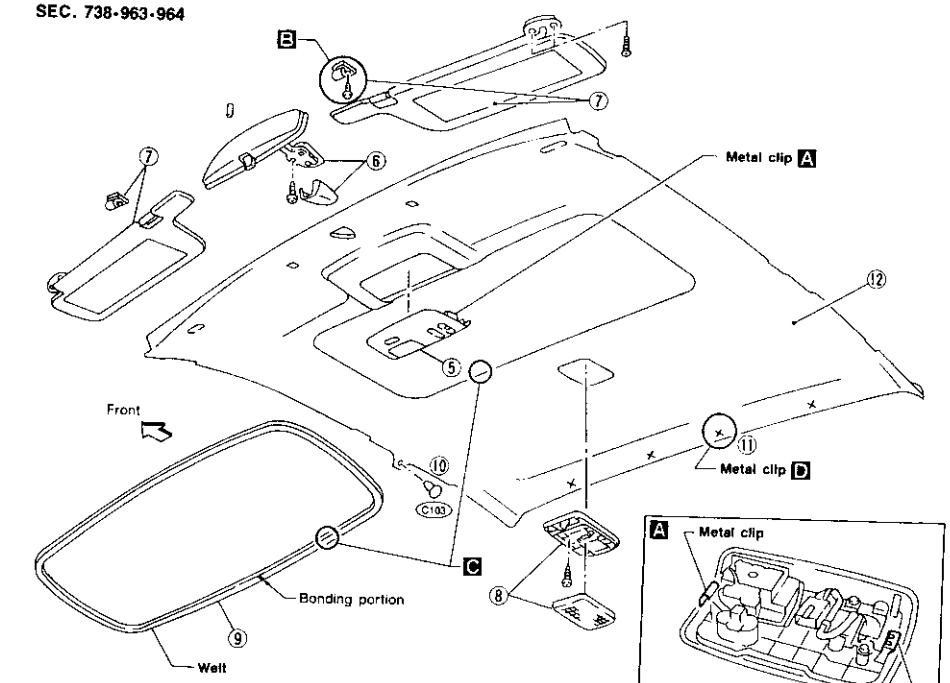

MBF446BA

TRUNK ROOM TRIM

SEC. 799-849

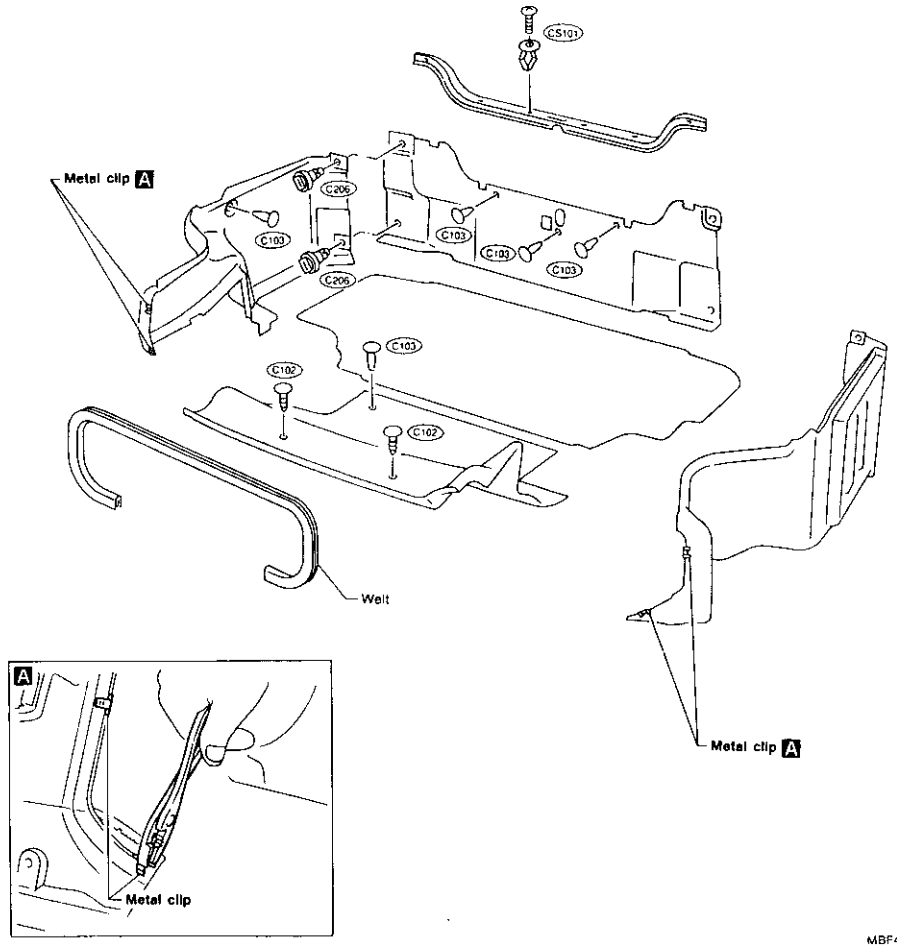

MBF448BA

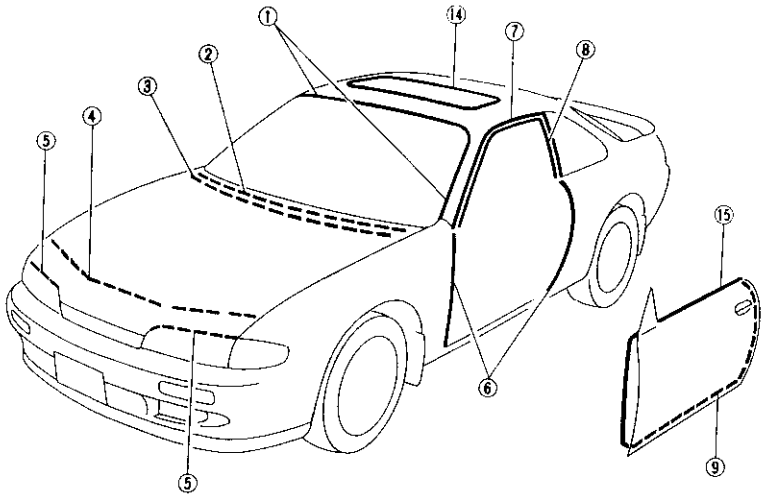

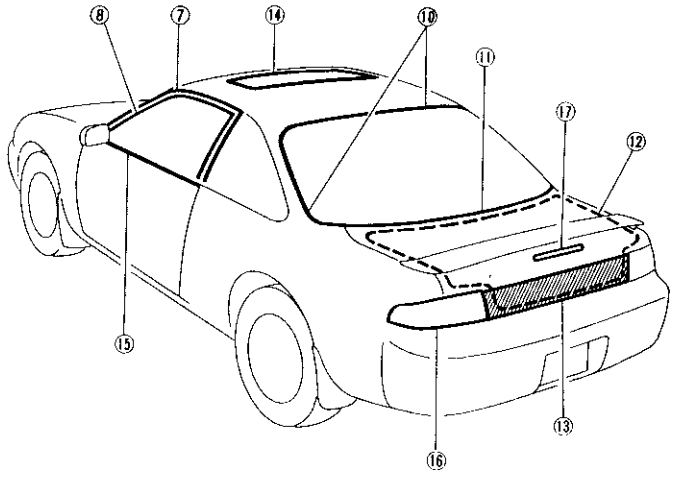

MBF449B

① Windshield upper and side molding

Method 1

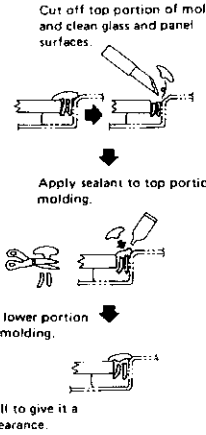

Method 2

1. Cut off sealant at glass end.
2. Clean the side on which panel was mounted.
3. Set molding fastener and apply sealant to body panel, and apply primer to molding and body.

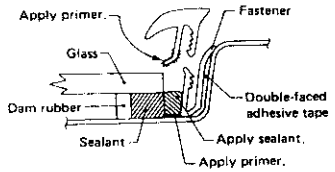

4. Install molding by aligning the molding mark located on center with vehicle center.
   Be sure to install tightly so that there is no gap around the corner.

SBF161F

②, ③ Cowl top grille and hood rear sealing rubber

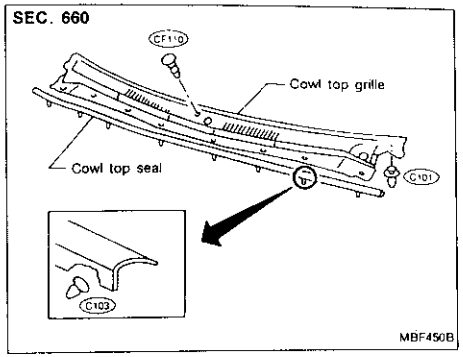

MBF450B

④, ⑤ Hood front sealing rubber

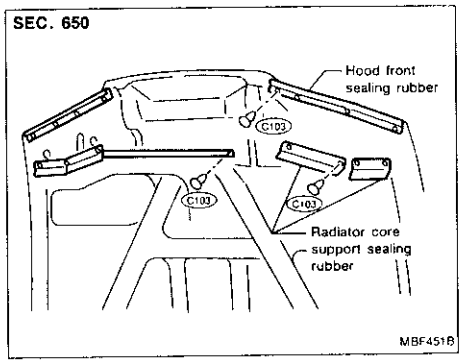

MBF451B

⑥ Body side welt

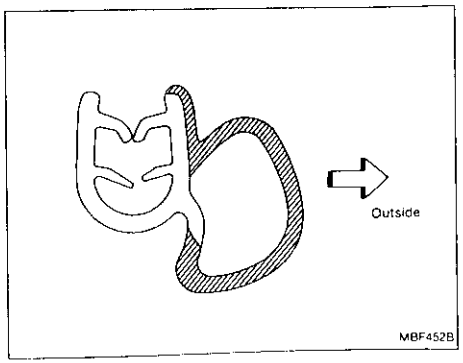

MBF452B

⑦, ⑧ Body side weatherstrip and weatherstrip retainer

SEC. 766

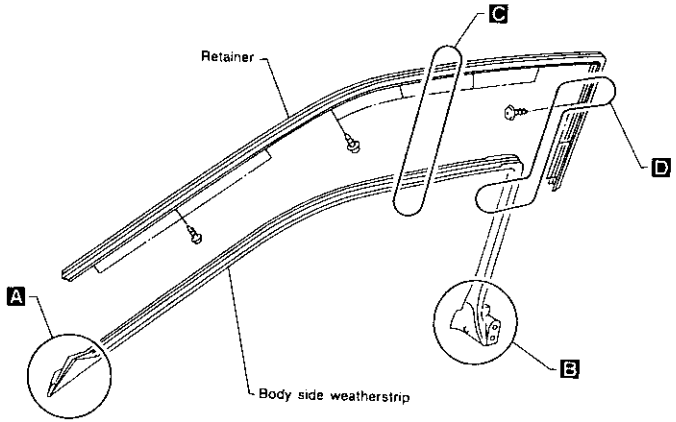

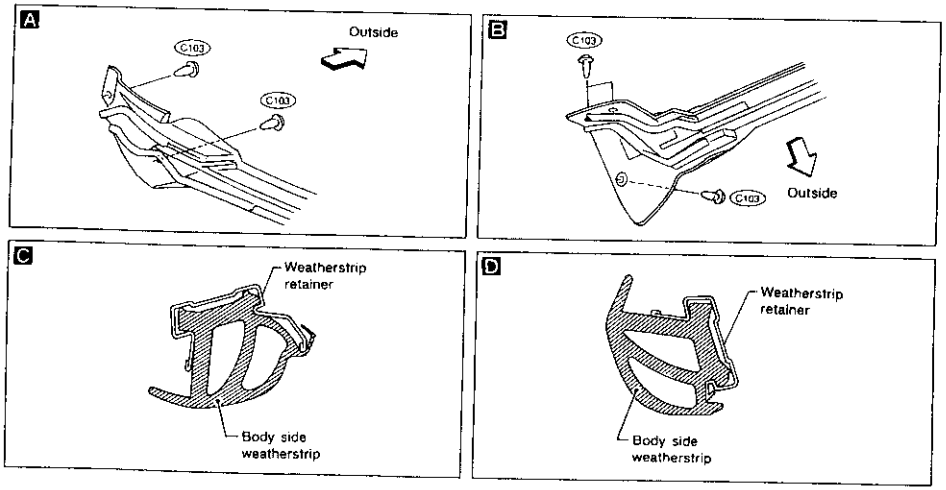

MBF453BA

⑨ Door weatherstrip

Before removing door weatherstrip, remove door trim. Refer to "DOOR TRIM" for details (BT-19).

SEC. 800

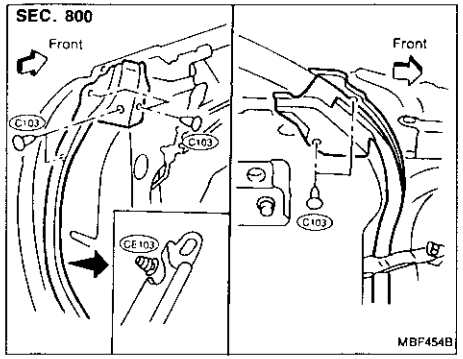

⑩ Back window upper and side molding (SEC. 797)

Basically the same as windshield upper and side molding.

⑪ Back window lower molding (SEC. 797)

It is mounted with screws.

⑫ Trunk lid weatherstrip

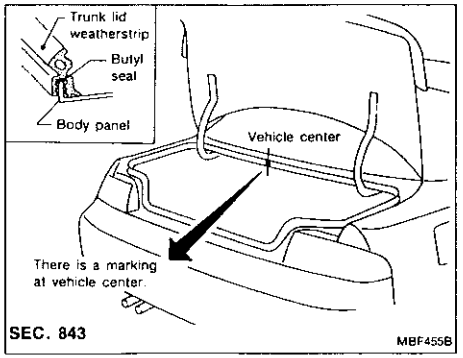

⑬ Rear panel finisher

SEC. 265

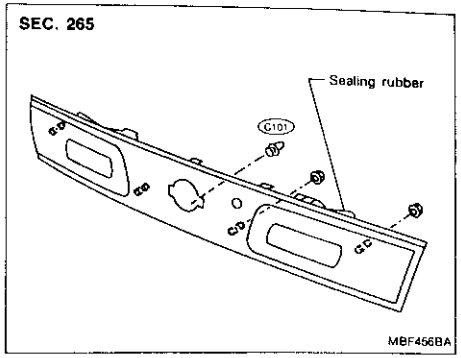

⑭ Sun roof lid weatherstrip

SEC. 736

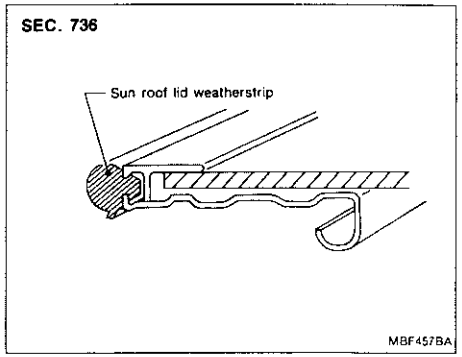

⑮ Door waist outside molding

SEC. 800

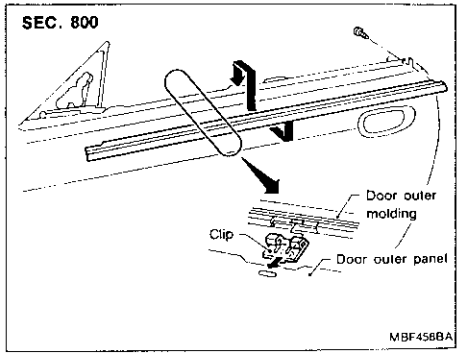

⑯ Rear combination lamp

SEC. 265

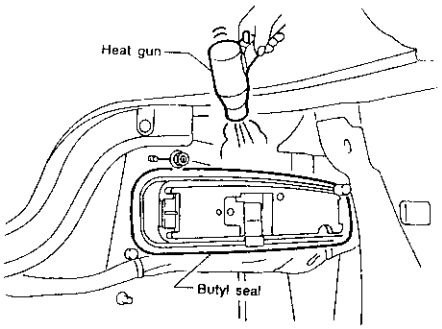

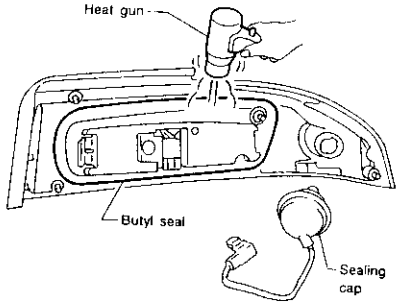

- Warm up lamp assembly area to a temperature a little below 60°C (140°F).
- Apply butyl seal evenly as it tends to become thin in the corners.
- Warm up lamp assembly area to a temperature a little below 60°C (140°F).

MBF459B

⑰ High-mounted stop lamp

SEC. 268

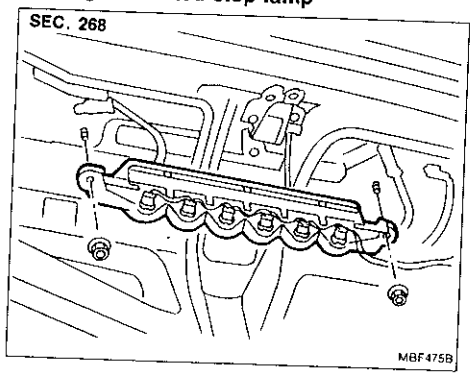

MBF475B

- When removing or installing the seat trim, carefully handle it to keep dirt out and avoid damage.

Front Seat

SEC. 870

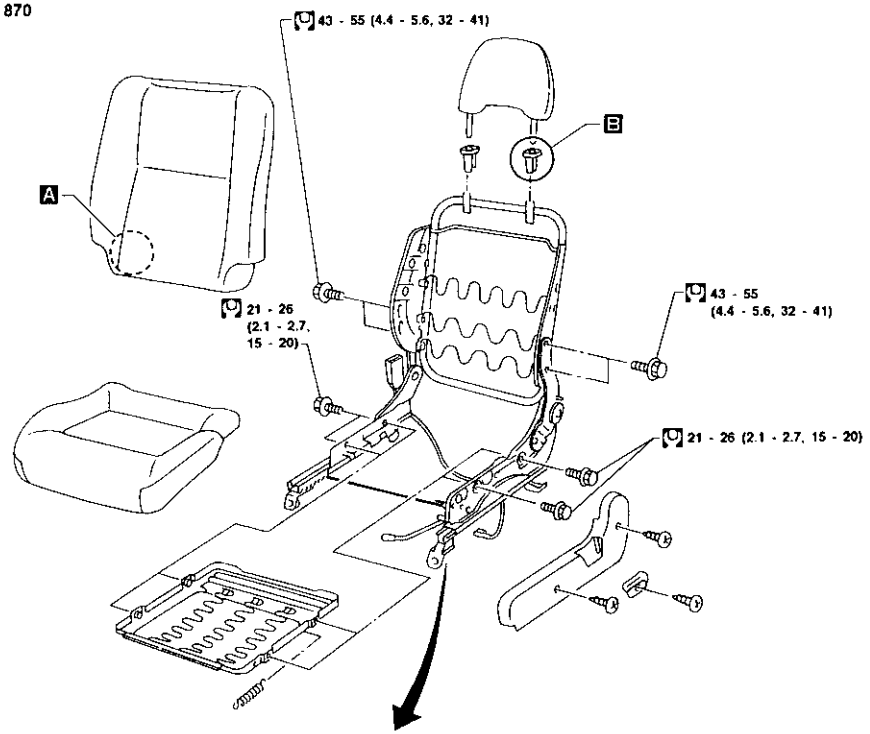

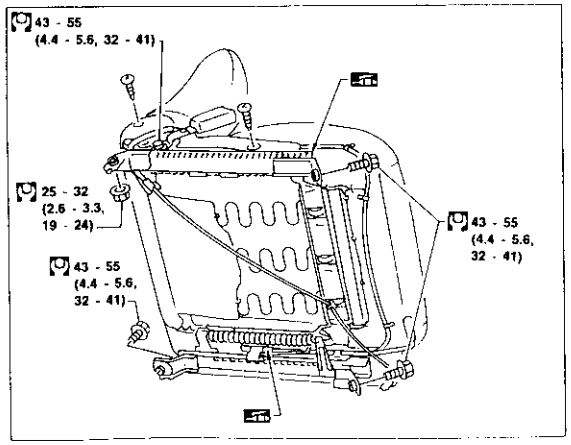

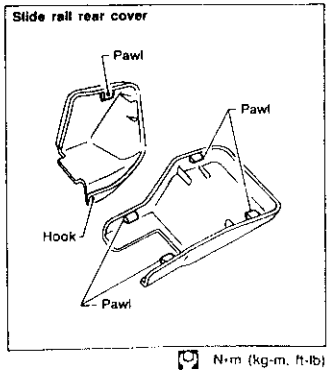

N·m (kg-m, ft-lb)

MBF460BA

Front Seat (Cont'd)

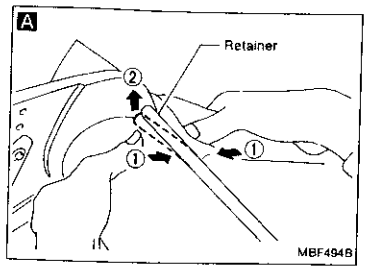

Remove retainer from lower side of seatback with fingers.

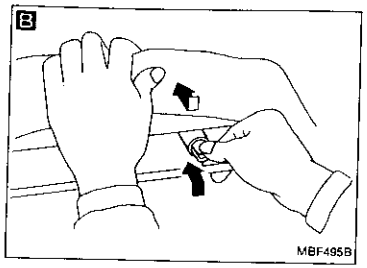

Roll up seatback trim all the way to gain access to headrest holder pawls. Disengage and push headrest holder pawls to unlock holder. Lift off headrest holder.

Front Seat (Cont'd)

HEATED SEAT

- When handling seat, be extremely careful not to scratch heating unit.
- To replace heating unit, seat trim and pad should be separated.
- Do not use any organic solvent, such as thinner, benzene, alcohol, gasoline, etc. to clean trims.

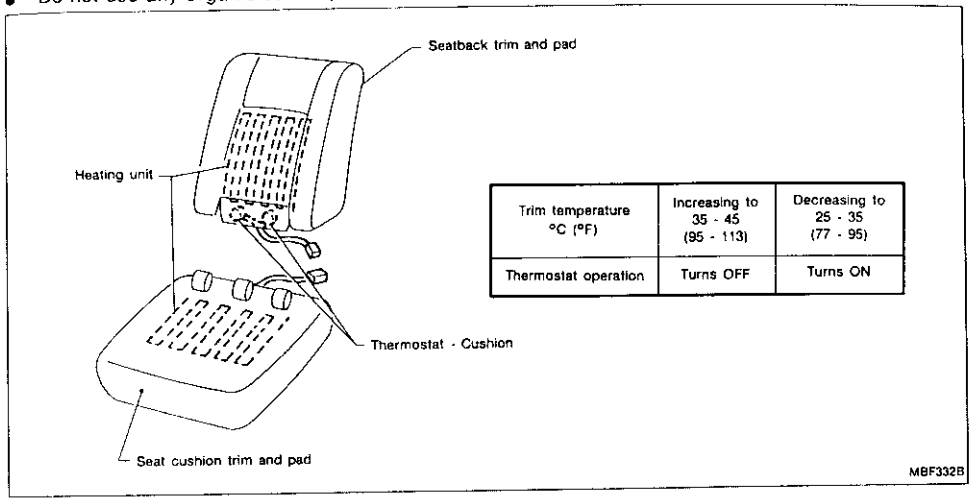

Trim temperature °C (°F)	Increasing to 35 - 45 (95 - 113)	Decreasing to 25 - 35 (77 - 95)
Thermostat operation	Turns OFF	Turns ON

★ **For Wiring Diagram, refer to "HEATED SEAT" in EL section.**

Rear Seat

SEC. 880

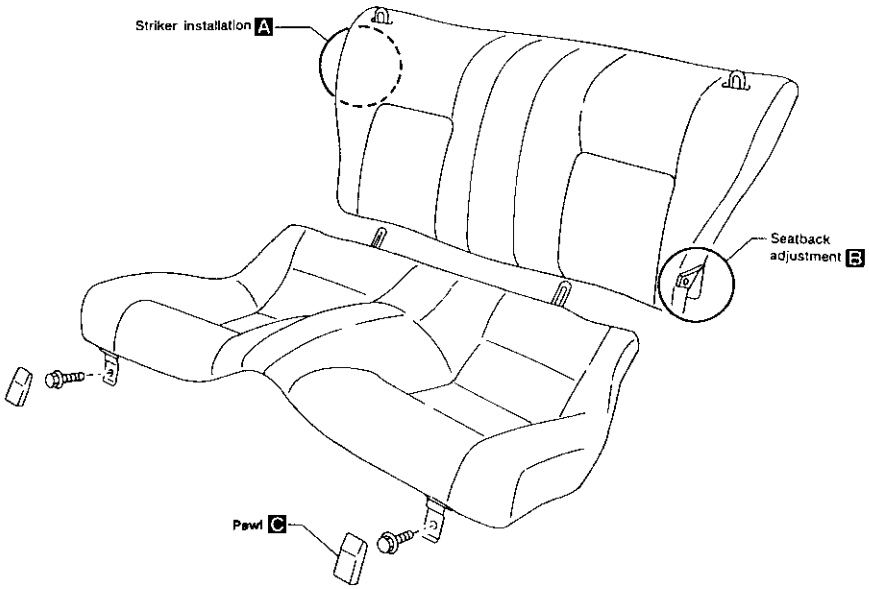

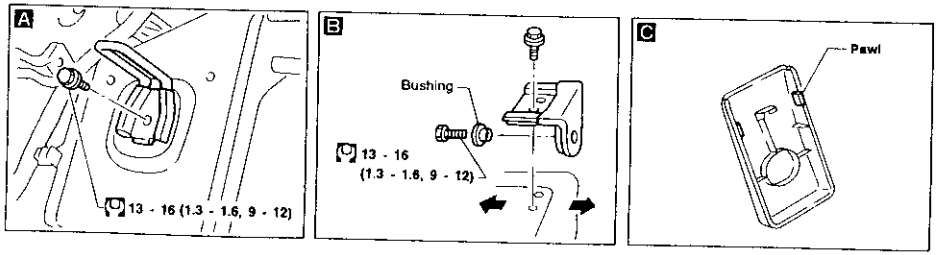

N·m (kg-m, ft-lb)

MBF461BA

★ For Wiring Diagram, refer to "ELECTRIC SUN ROOF" in EL section.

ADJUSTMENT

Install motor & limit SW assembly and sunroof rail assembly in the following sequence:

1. Arrange equal lengths of link and wire assemblies on both sides of sunroof opening.
2. Connect sunroof connector to sunroof switch and positive (+) power supply.
3. Set lid assembly to fully closed position A by operating OPEN switch and TILT switch.
4. Fit outer side of lid assembly to the surface of roof on body outer panel.
5. Remove motor, and keep OPEN switch pressed until motor pinion gear reaches the end of its rotating range.
6. Install motor.
7. Check that motor drive gear fits properly in wires.
8. Press TILT-UP switch to check lid assembly for normal tilting.
9. Check sunroof lid assembly for normal operations (tilt-up, tilt-down, open, and close).

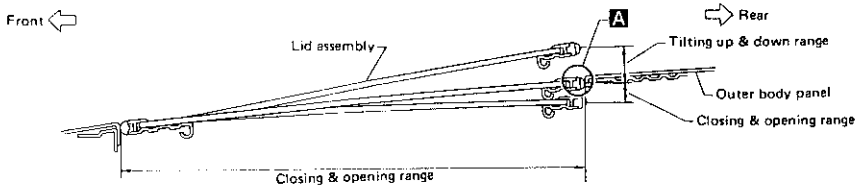

SBF920F

- After any adjustment, check sun roof operation and lid alignment.
- Handle finisher plate and glass lid with care so not to cause damage.
- It is desirable for easy installation to mark each point before removal.

CAUTION:
Always work with a helper.

Link and wire assembly	Sun roof frame assembly	Shade assembly	Lid assembly	Motor assembly

Tilt glass lid up.

① Side trim
- Remove side trim clips.

② Sun roof lid mount nuts

③ Lid assembly

④ Rear drain mount screws

⑤ Rear drain assembly

Operate sun roof switch to tilt glass lid down.

⑥ Shade assembly A

Sun roof switch/interior accessories/headlining
- Refer to "ROOF TRIM" (BT-20).

⑦ Motor switch bracket

⑧ Motor assembly

⑨ Window deflector holder B1-B3

⑩ Window deflector mount screw

⑪ Window deflector assembly

⑫ Drain hoses

⑬ Sun roof unit bracket

⑭ Sun roof frame assembly

⑮ Guide stopper

⑯ Rear guide

⑰ Link and wire assembly

SEC. 264·736

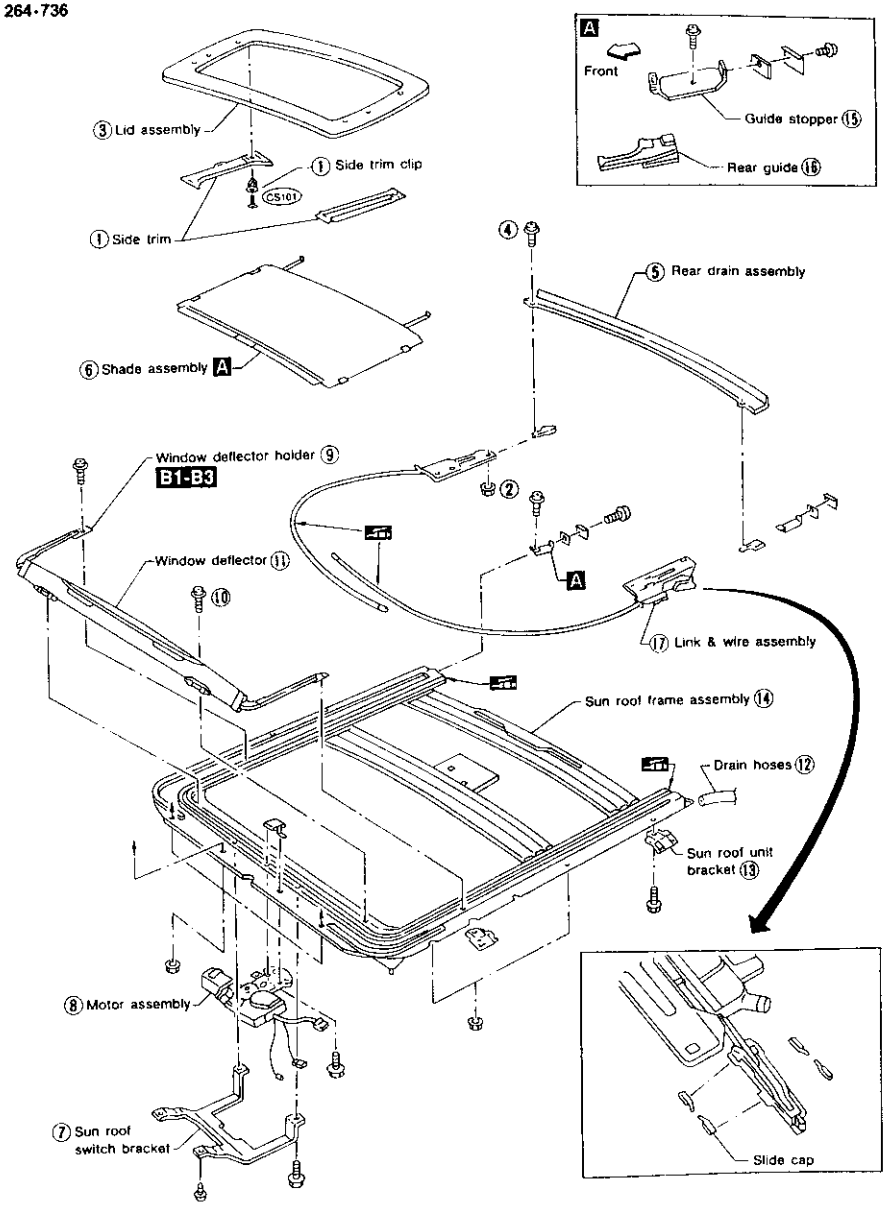

SBT007

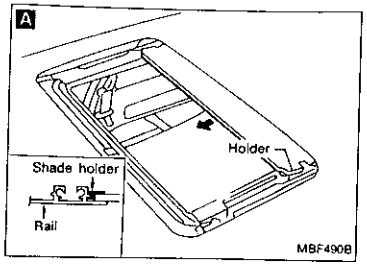

A Using flat-bladed screwdriver, pry shade assembly holder off rail. Then pull shade assembly forward to remove it from rail.

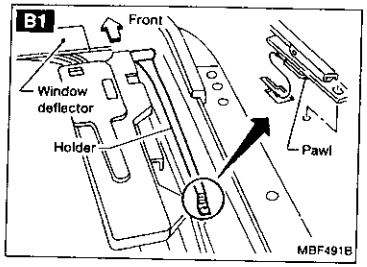

B1 Disengage pawls from rail, then remove window deflector holder.

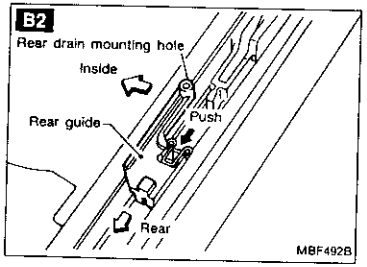

B2 Using flat-bladed screwdriver, pry stopper spring off rail groove. Then slide rear guide backward to remove it from rail.

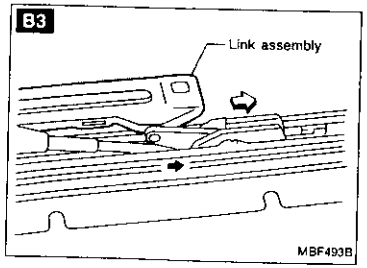

B3 Remove wire and link assembly from rail while pushing link back with flat-bladed screwdriver.

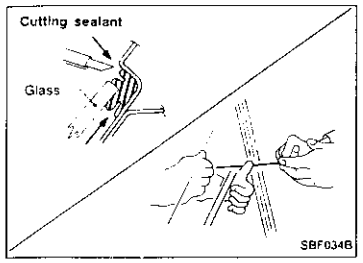

REMOVAL

After removing moldings, remove glass.

CAUTION:

Be careful not to scratch glass when removing.

INSTALLATION

- **Use genuine Nissan Sealant kit or equivalent. Follow instructions furnished with it.**
- **After installation, the vehicle should remain stationary until the sealant hardens.**

WARNING:

Keep heat and open flames away as primers are flammable.

CAUTION:

Advise users not to drive the vehicle on rough roads until sealant has properly vulcanized.

- **Do not use sealant which is past its usable term.**
- **Do not leave cartridge unattended with its cap open.**
- **Keep primers and sealant in a cool, dry place. Ideally, they should be stored in a refrigerator.**
- **Molding must be installed securely so that it is in position and leaves no gap.**

Windshield and Rear Window

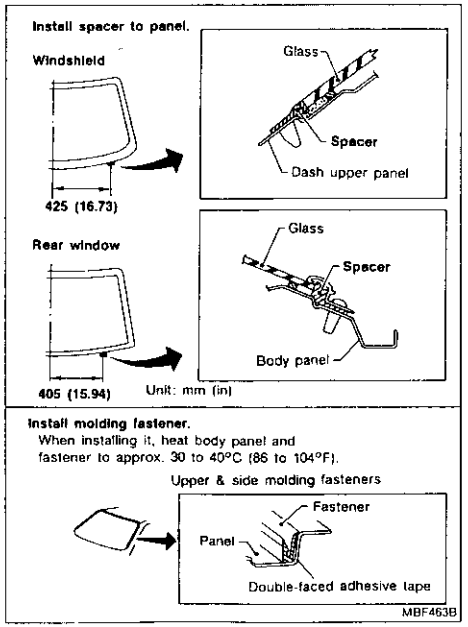

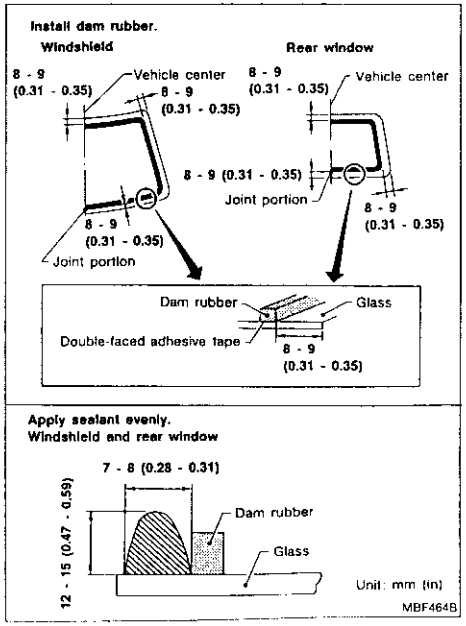

REPAIRING WATER LEAKS FOR WINDSHIELD AND WINDOWS

Leaks can be repaired without removing and reinstalling glass.

If water is leaking between caulking material and body or glass, determine the extent of leaking. This can be determined by applying water while pushing glass outward.

To stop the leak, apply primer and then sealant to the leak point.

Side Window

SEC. 830

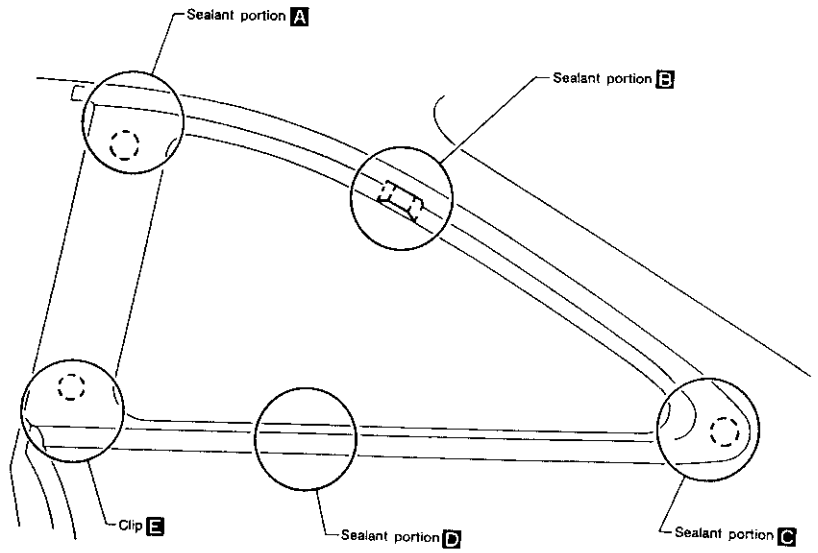

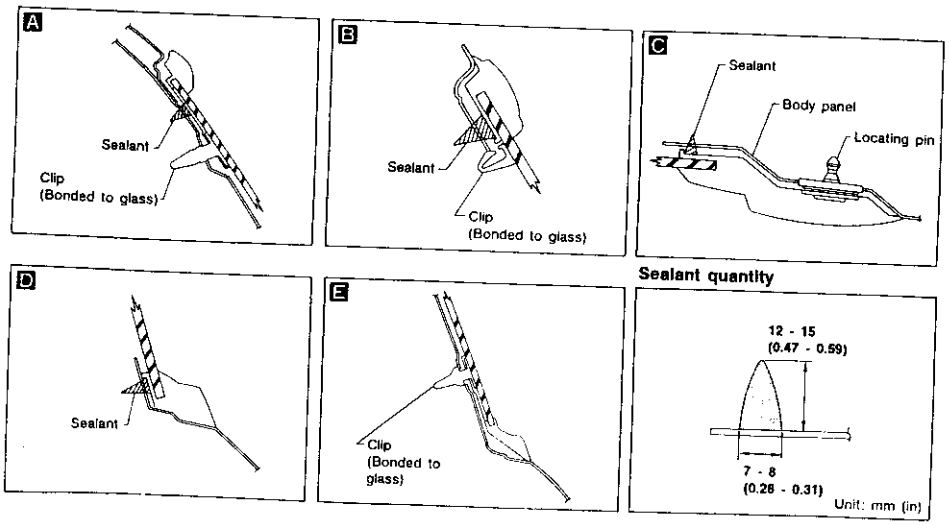

MBF465BA

★For Wiring Diagram, refer to "POWER DOOR MIRROR" in EL section.

CAUTION:
Be careful not to scratch door rearview mirror body.

REMOVAL — Door mirror

① Remove door trim. Refer to "DOOR TRIM" in "INTERIOR TRIM" for details (BT-19).
② Remove inner cover front corner of door A .
③ Disconnect door mirror harness connector.
④ Remove harness clips.
⑤ Remove three bolts securing door mirror, then remove door mirror.

SEC. 963

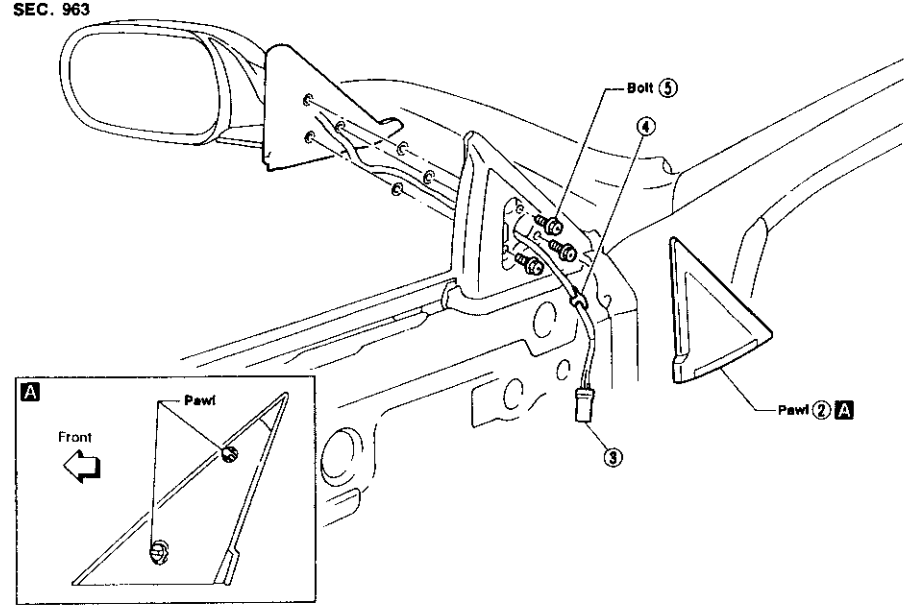

Removal:
- Wrap flat-bladed of screwdriver with a cloth to prevent scratching rear of door mirror. Do not insert screwdriver too far.

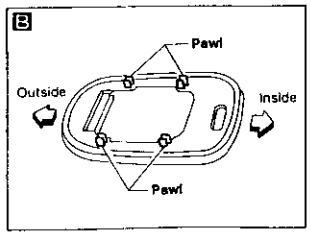

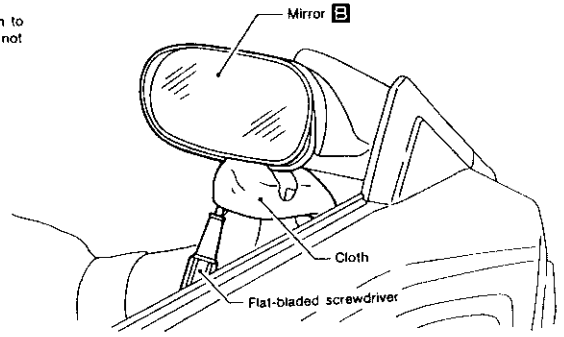

MBF466BA

- When installing, make sure that there are not gaps or waves at ends of air spoiler.
- Before installing spoiler, clean and remove oil from surface where spoiler will be mounted.

Front Air Spoiler

SEC. 960

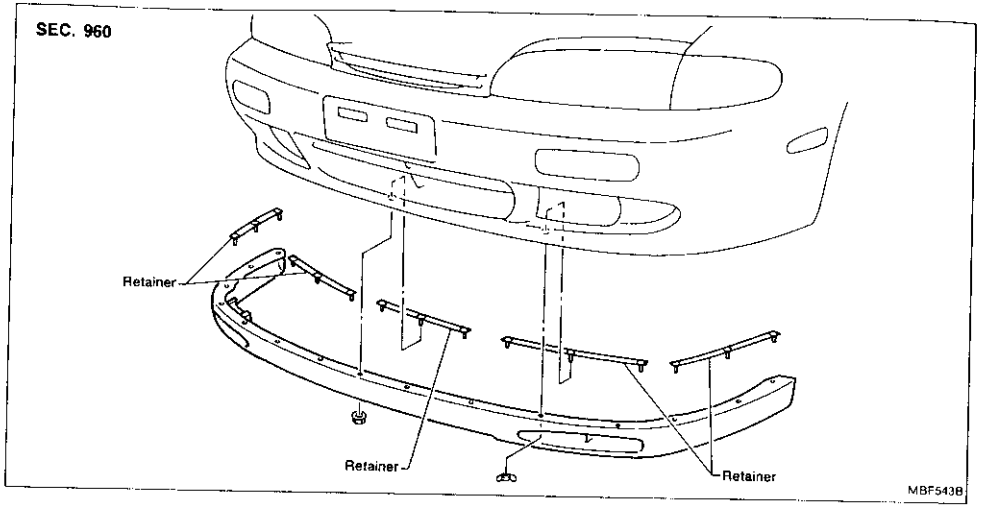

Rear Air Spoiler

SEC. 960

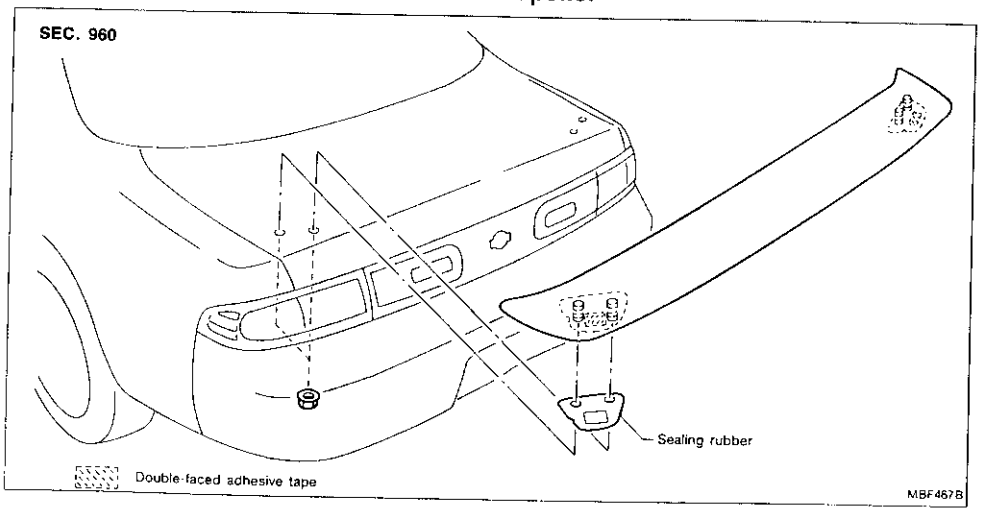

- All dimensions indicated in figures are actual ones.
- When using a tracking gauge, adjust both pointers to equal length. Check the pointers and gauge itself to make sure there is no free play.
- When a measuring tape is used, check to be sure there is no elongation, twisting or bending.
- Measurements should be taken at the center of the mounting holes.
- An asterisk (*) following the value at the measuring point indicates that the measuring point on the other side is symmetrically the same value.
- The coordinates of the measurement points are the distances measured from the standard line of "X", "Y" and "Z".

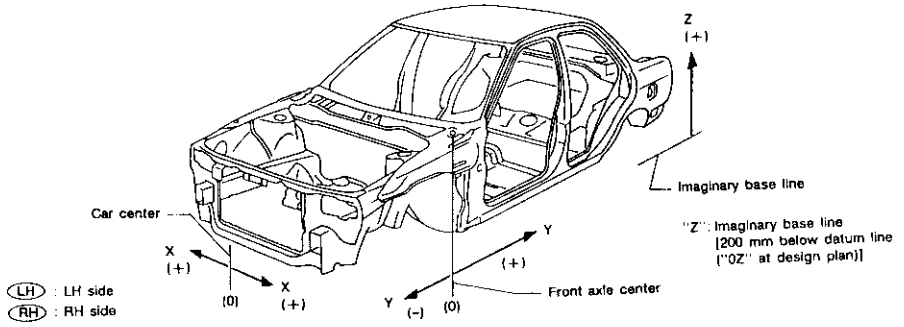

Engine Compartment

MEASUREMENT

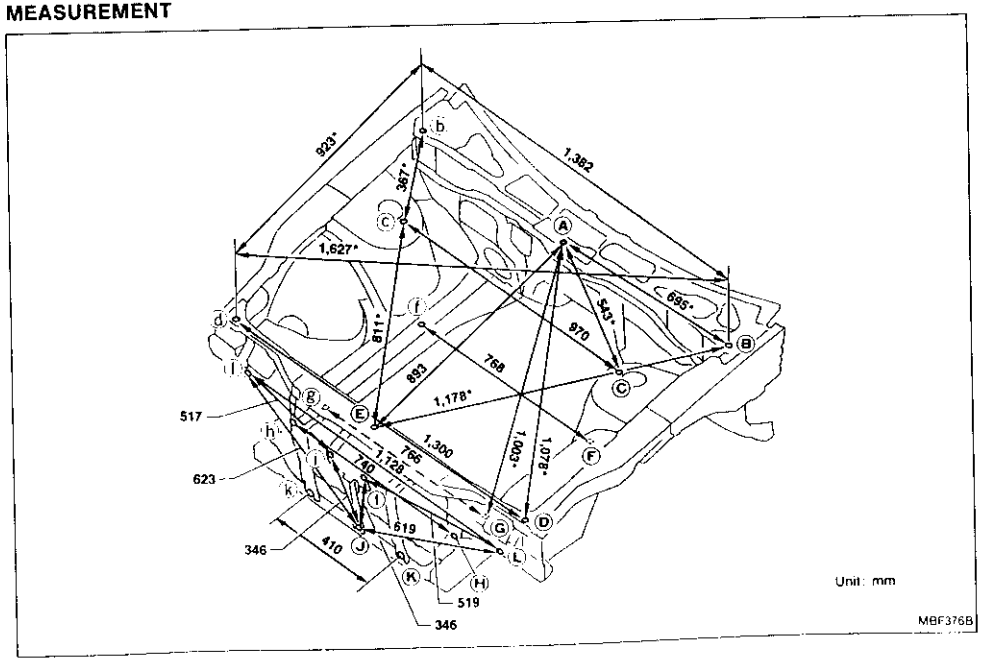

- All dimensions indicated in figures are actual ones.
- When using a tracking gauge, adjust both pointers to equal length. Check the pointers and gauge itself to make sure there is no free play.
- When a measuring tape is used, check to be sure there is no elongation, twisting or bending.
- Measurements should be taken at the center of the mounting holes.
- An asterisk (*) following the value at the measuring point indicates that the measuring point on the other side is symmetrically the same value.
- The coordinates of the measurement points are the distances measured from the standard line of "X", "Y" and "Z".

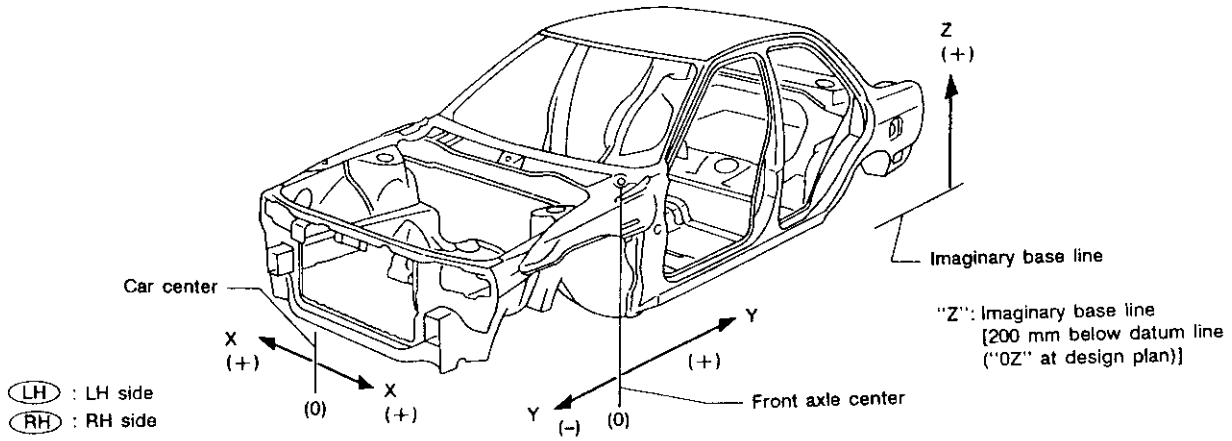

SBF874G

Engine Compartment

MEASUREMENT

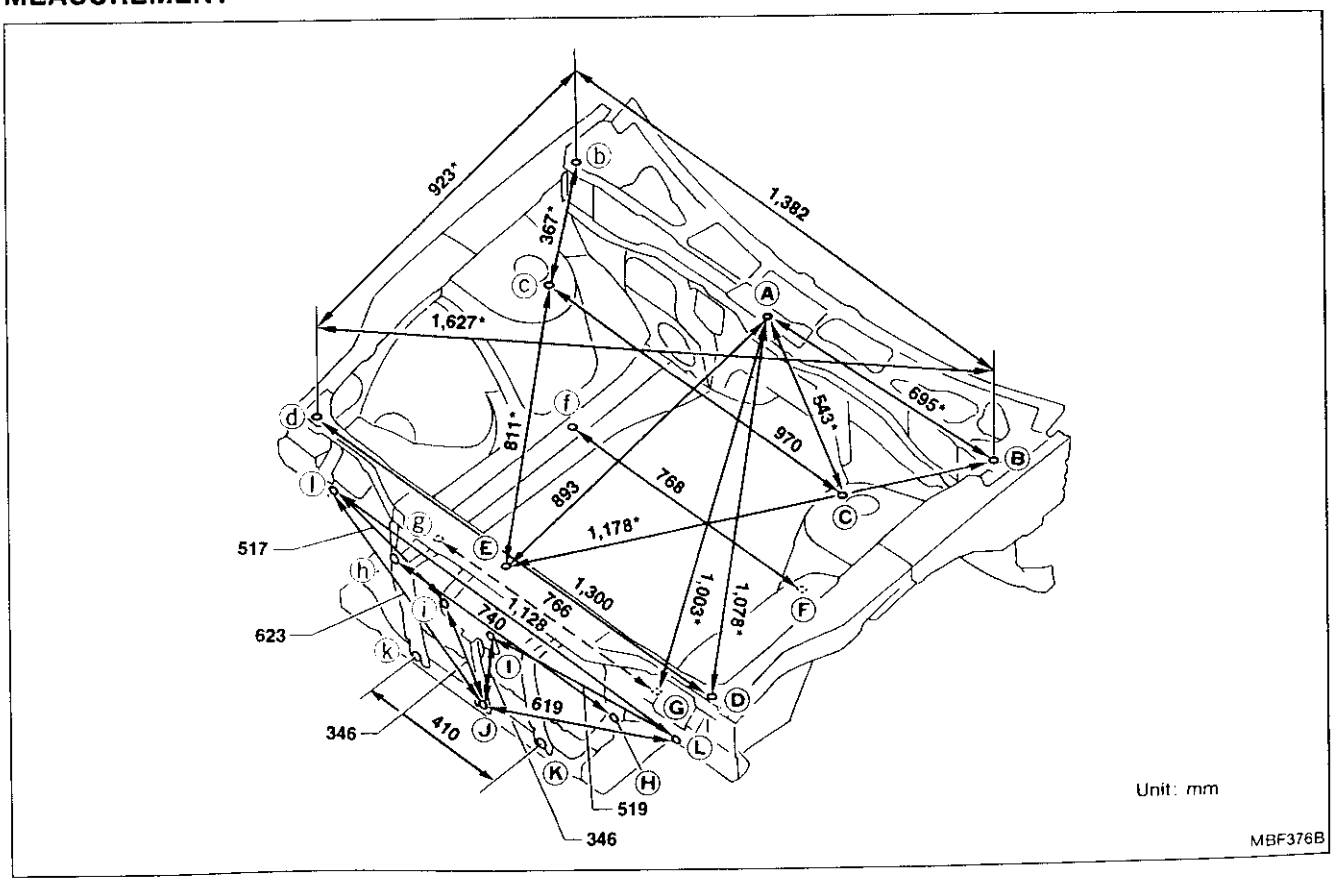

MBF376B

FRONT AND REAR AIR SPOILER

- When installing, make sure that there are not gaps or waves at ends of air spoiler.
- Before installing spoiler, clean and remove oil from surface where spoiler will be mounted.

Front Air Spoiler

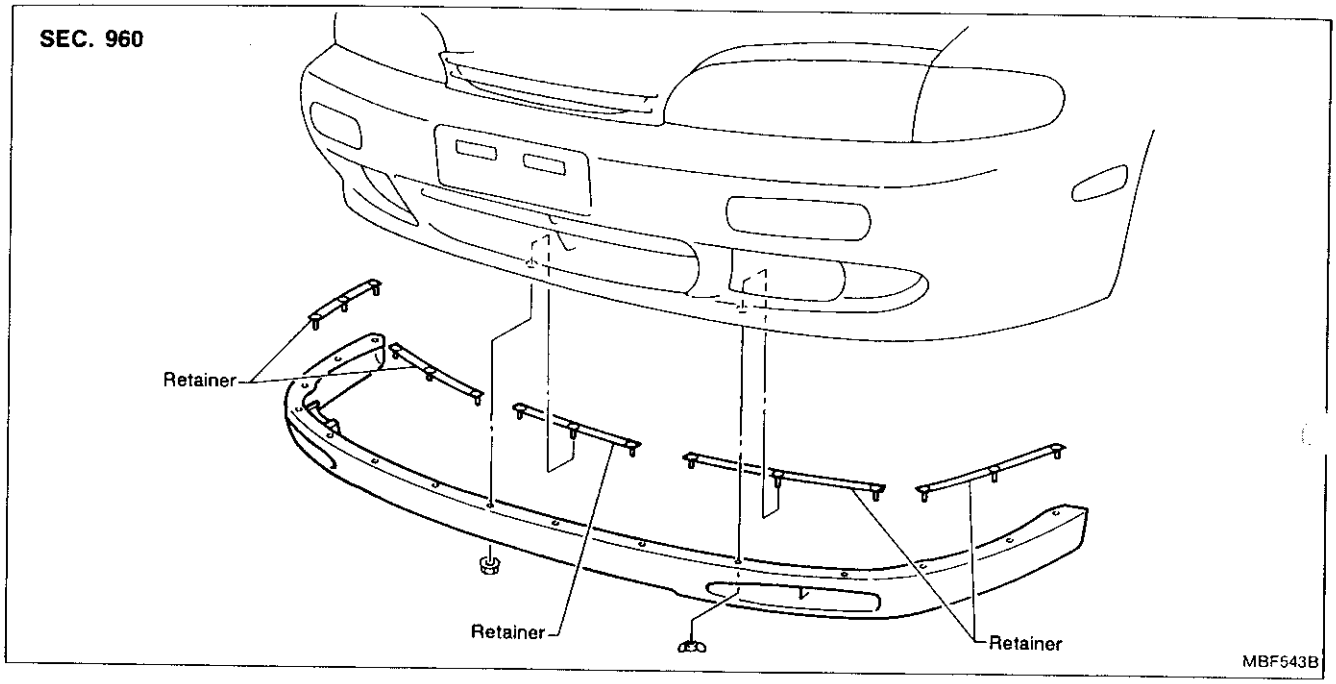

Rear Air Spoiler

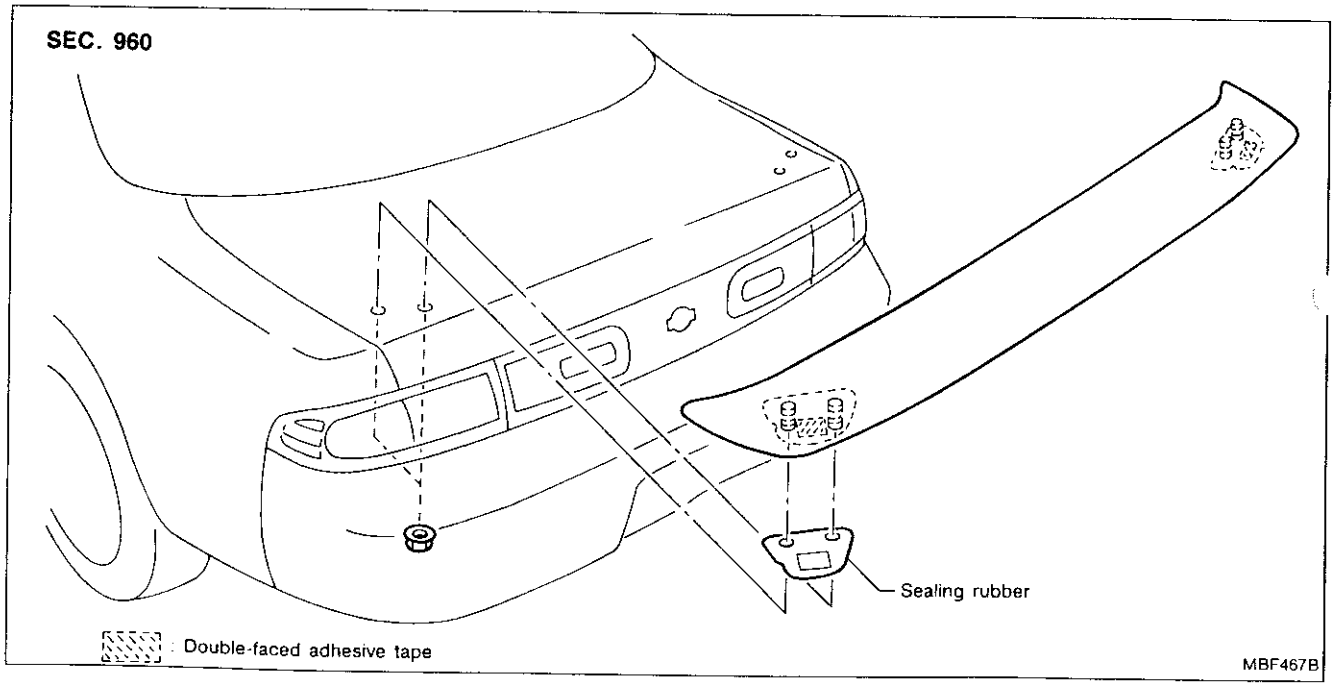

Underbody

MEASUREMENT

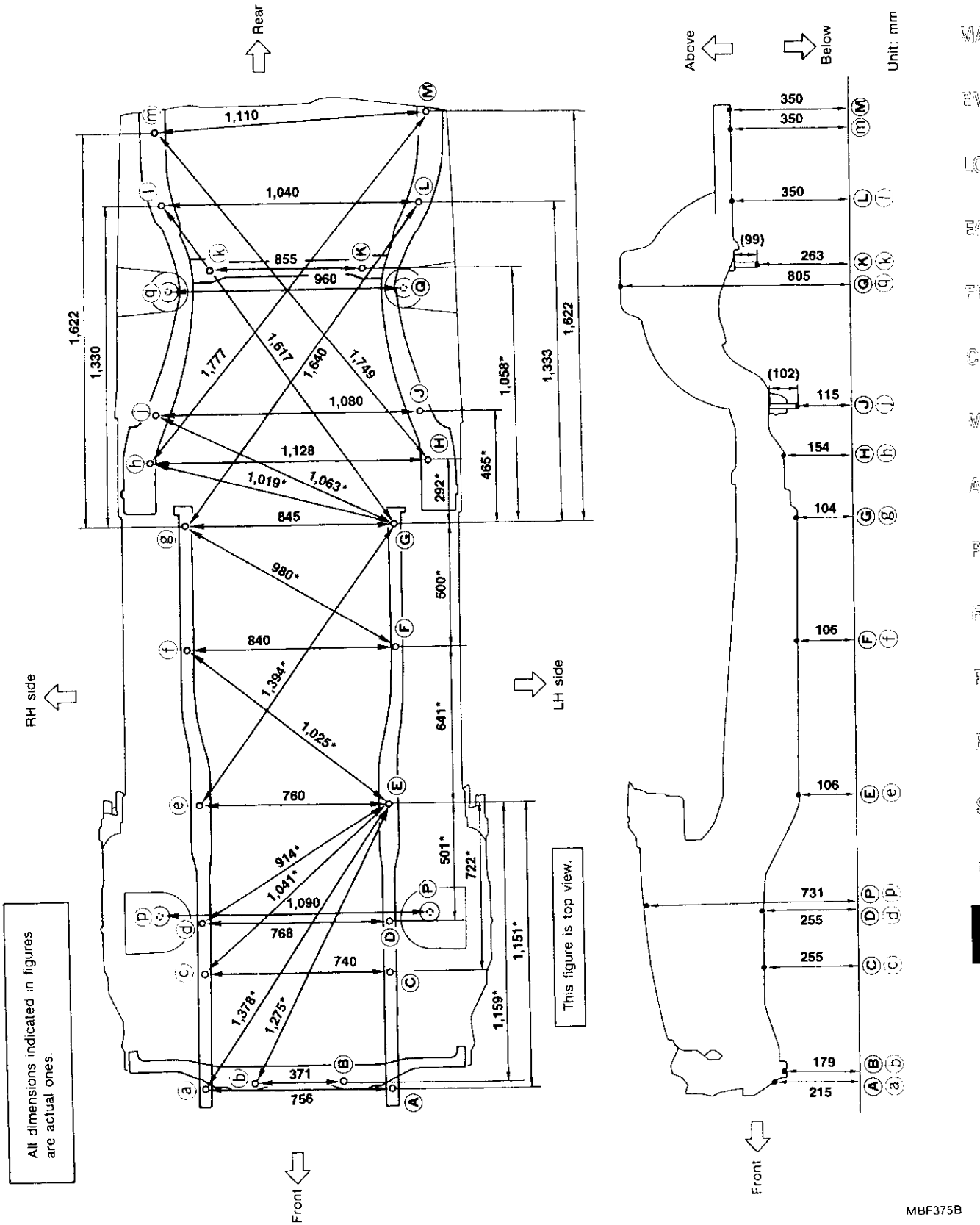

Engine Compartment (Cont'd)

MEASUREMENT POINTS

Unit: mm

Cowl top center

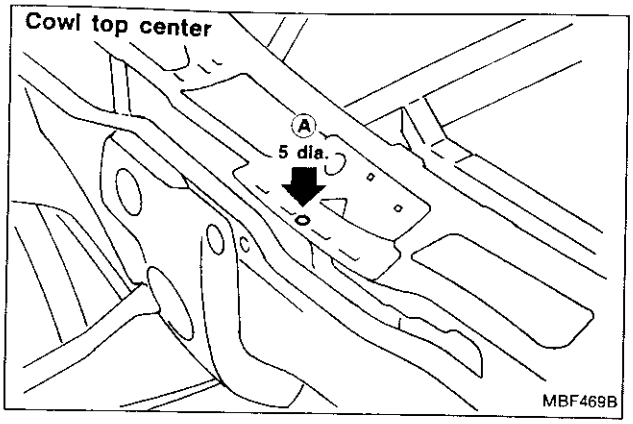

Radiator core support upper and hood lock mounting reinforcement

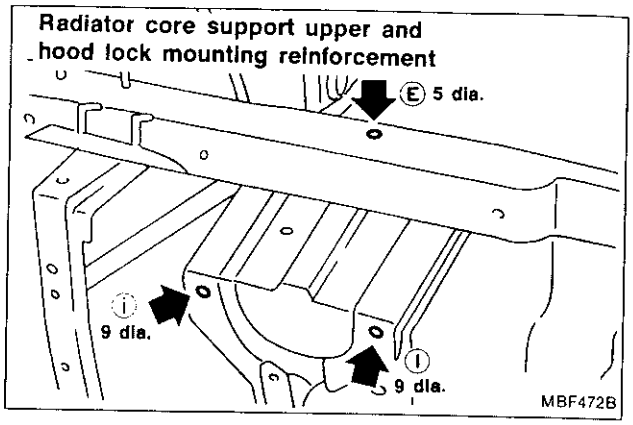

Strut tower and cowl top side

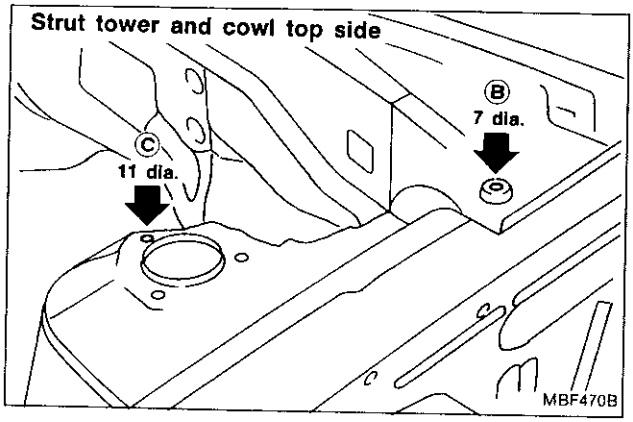

Front side member

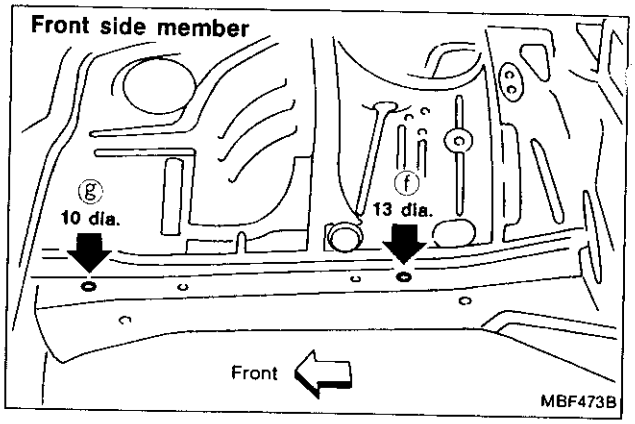

Radiator core support upper and side

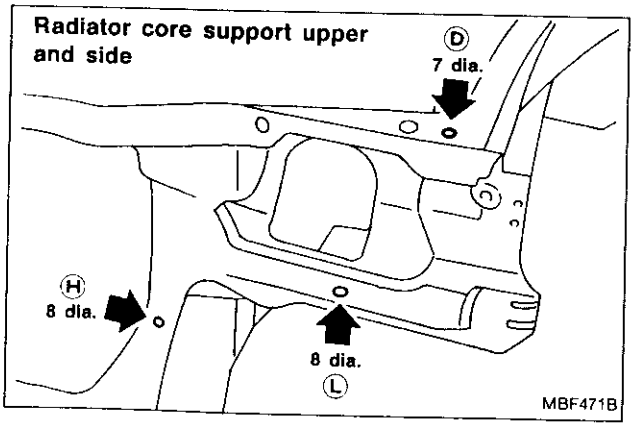

Radiator core support lower

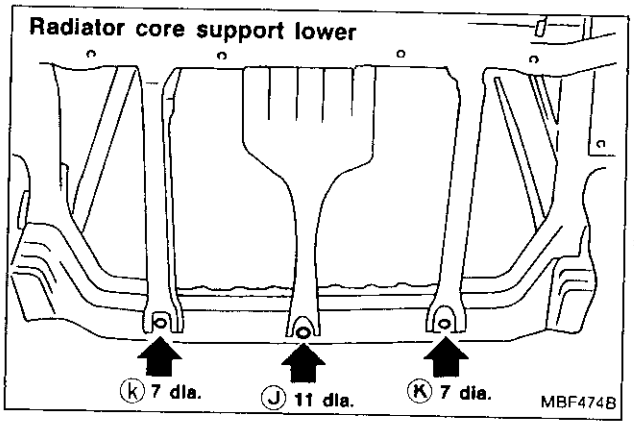

MEASUREMENT POINTS

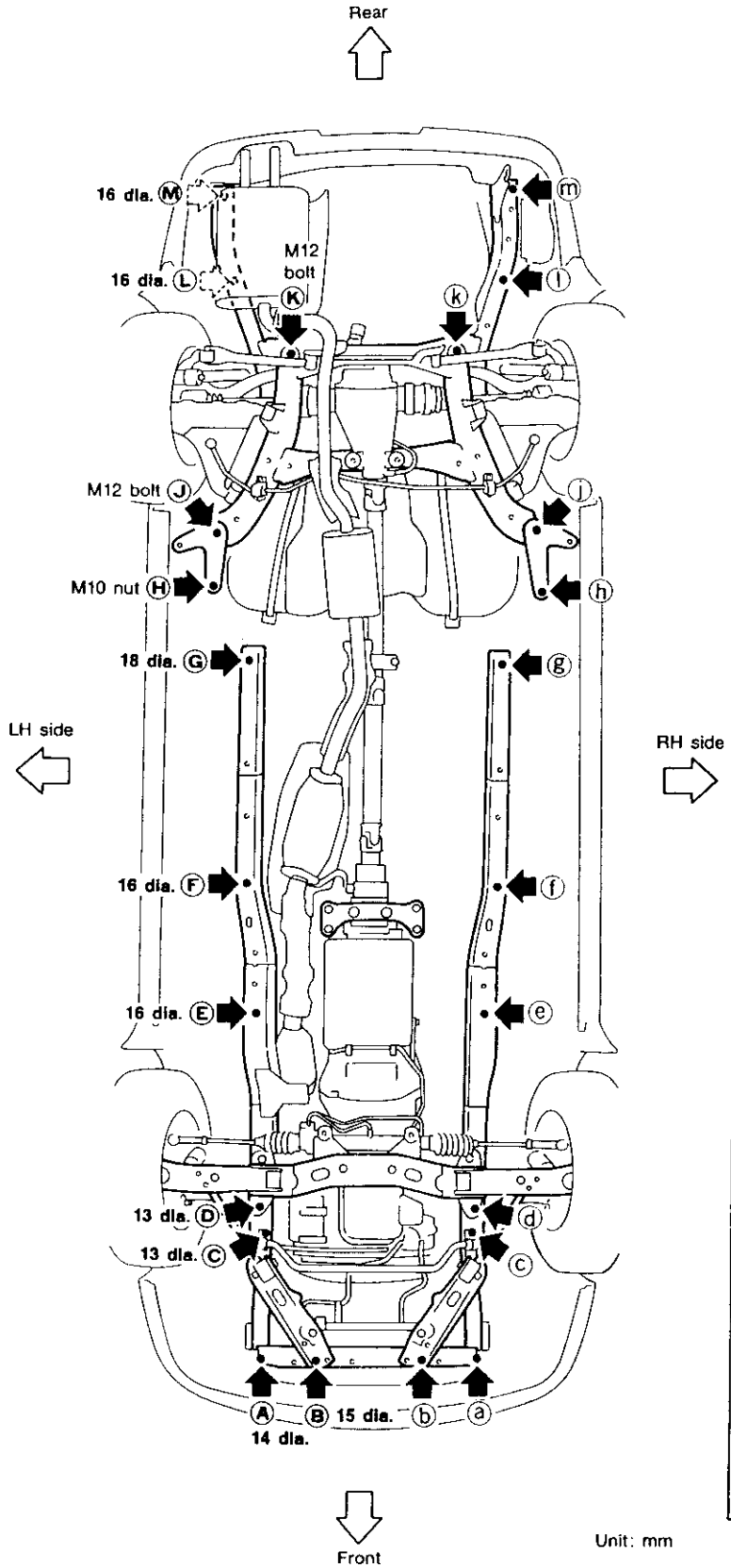

Front coordinates:	Rear coordinates:
Ⓐ, ⓐ X : 378 Y : –635.5 Z : 214.5	Ⓖ, ⓖ X : 422.5 Y : 1,650 Z : 103.9
Ⓑ, ⓑ X : 185.3 Y : –630 Z : 179	Ⓗ, ⓗ X : 564 Y : 1,900 Z : 154
Ⓒ, ⓒ X : 370 Y : –196.5 Z : 254.9	Ⓙ, ⓙ X : 540 Y : 2,100 Z : 115.2
Ⓓ, ⓓ X : 384.2 Y : 32 Z : 254.9	Ⓚ, ⓚ X : 308 Y : 2,690 Z : 262.8
Ⓔ, ⓔ X : 380 Y : 510 Z : 106.2	Ⓛ X : 540 Y : 2,955 Z : 350
Ⓕ, ⓕ X : 420 Y : 1,150 Z : 106.2	ⓛ X : 500 Y : 2,955 Z : 350
	Ⓜ X : 580 Y : 3,245 Z : 350
	ⓜ X : 530 Y : 3,250 Z : 350

Front and rear strut tower centers

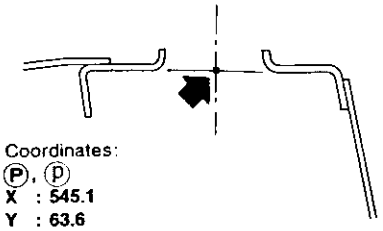

Coordinates:

Ⓟ, ⓟ
X : 545.1
Y : 63.6
Z : 730.9

Ⓠ, ⓠ
X : 479.8
Y : 2,608
Z : 804.6

Front: Ⓟ, ⓟ 82.2 dia.
Rear: Ⓠ, ⓠ 66 dia.

Unit: mm

MBF477BA

HEATER & AIR CONDITIONER

SECTION HA

CONTENTS

MANUAL AND AUTO

PRECAUTIONS AND PREPARATION 3
- Supplemental Restraint System (SRS) "AIR BAG" and "SEAT BELT PRE-TENSIONER" 3
- Precautions for Working with HFC-134a (R-134a) 3
- General Refrigerant Precautions 3
- Precautions for Refrigerant Connection 4
- Precautions for Servicing Compressor 5
- Special Service Tools 5
- HFC-134a (R-134a) Service Tools and Equipment 6
- Precautions for Service Equipment 8

DESCRIPTION 10
- Refrigeration Cycle 10
- Component Layout 11
- Discharge Air Flow 12

MANUAL

DESCRIPTION 13
- Control Operation 13

TROUBLE DIAGNOSES 14
- Contents 14
- Wiring Diagram — HEAT — 37
- Wiring Diagram — A/C, M — 45

AUTO

DESCRIPTION 72
- Introduction 72
- Features 72
- Control Operation 73

TROUBLE DIAGNOSES 76
- Contents 76
- Wiring Diagram — A/C, A — 104

SYSTEM DESCRIPTION 127
- Overview of Control System 127
- Control System Input Components 128
- Control System Automatic Amplifier (Auto amp.) 130
- Control System Output Components 130

MANUAL AND AUTO

SERVICE PROCEDURES 138
- HFC-134a (R-134a) Service Procedure 138
- Maintenance of Lubricant Quantity in Compressor 140
- Refrigerant Lines 142
- Compressor Mounting 144
- Belt Tension 144
- Fast Idle Control Device (FICD) 144
- Compressor — Model DKV-14C (ZEXEL make) 145

MANUAL

SERVICE PROCEDURES 148
- Overhaul — Push Control Unit Assembly 148
- Disassembly 148

MANUAL AND AUTO

SERVICE DATA AND SPECIFICATIONS (SDS) 149
- General Specifications 149
- Inspection and Adjustment 149

CONTENTS (Cont'd.)

When you read wiring diagrams:
- Read GI section, "HOW TO READ WIRING DIAGRAMS".
- See EL section, "POWER SUPPLY ROUTING" for power distribution circuit.

When you perform trouble diagnoses, read GI section, "HOW TO FOLLOW FLOW CHART IN TROUBLE DIAGNOSES" and "HOW TO PERFORM EFFICIENT DIAGNOSIS FOR AN ELECTRICAL INCIDENT".

Supplemental Restraint System (SRS) "AIR BAG" and "SEAT BELT PRE-TENSIONER"

The Supplemental Restraint System "Air Bag" and "Seat Belt Pre-tensioner", used along with a seat belt, help to reduce the risk or severity of injury to the driver and front passenger in a frontal collision. The Supplemental Restraint System consists of air bag modules (located in the center of the steering wheel and on the instrument panel on the passenger side), seat belt pre-tensioner, a diagnosis sensor unit, warning lamp, wiring harness and spiral cable. Information necessary to service the system safely is included in the **RS section** of this Service Manual.

WARNING:
- **To avoid rendering the SRS inoperative, which could increase the risk of personal injury or death in the event of a collision which would result in air bag inflation, all maintenance must be performed by an authorized NISSAN dealer.**
- **Improper maintenance, including incorrect removal and installation of the SRS, can lead to personal injury caused by unintentional activation of the system.**
- **All SRS air bag electrical wiring harnesses and connectors are covered with yellow outer insulation. Do not use electrical test equipment on any circuit related to the SRS.**

Precautions for Working with HFC-134a (R-134a)

WARNING:
- **CFC-12 (R-12) refrigerant and HFC-134a (R-134a) refrigerant are not compatible. These refrigerants must never be mixed, even in the smallest amounts. If the refrigerants are mixed, compressor failure is likely to occur.**
- **Use only specified lubricant for the HFC-134a (R-134a) A/C system and HFC-134a (R-134a) components. If lubricant other than that specified is used, compressor failure is likely to occur.**
- **The specified HFC-134a (R-134a) lubricant rapidly absorbs moisture from the atmosphere. The following handling precautions must be observed:**
  - **a: When removing refrigerant components from a vehicle, immediately cap (seal) the component to minimize the entry of moisture from the atmosphere.**
  - **b: When installing refrigerant components to a vehicle, do not remove the caps (unseal) until just before connecting the components. Connect all refrigerant loop components as quickly as possible to minimize the entry of moisture into system.**
  - **c: Only use the specified lubricant from a sealed container. Immediately reseal containers of lubricant. Without proper sealing, lubricant will become moisture saturated and should not be used.**
  - **d: Avoid breathing A/C refrigerant and lubricant vapor or mist. Exposure may irritate eyes, nose and throat. Use only approved recovery/recycling equipment to discharge HFC-134a (R-134a) refrigerant. If accidental system discharge occurs, ventilate work area before resuming service. Additional health and safety information may be obtained from refrigerant and lubricant manufacturers.**
  - **e: Do not allow lubricant (Nissan A/C System Oil Type S) to come in contact with styrofoam parts. Damage may result.**

General Refrigerant Precautions

WARNING:
- **Do not release refrigerant into the air. Use approved recovery/recycling equipment to capture the refrigerant every time an air conditioning system is discharged.**
- **Always wear eye and hand protection (goggles and gloves) when working with any refrigerant or air conditioning system.**
- **Do not store or heat refrigerant containers above 52°C (125°F).**
- **Do not heat a refrigerant container with an open flame; if container warming is required, place the bottom of the container in a warm pail of water.**
- **Do not intentionally drop, puncture, or incinerate refrigerant containers.**
- **Keep refrigerant away from open flames: poisonous gas will be produced if refrigerant burns.**
- **Refrigerant will displace oxygen, therefore be certain to work in well ventilated areas to prevent suffocation.**
- **Do not introduce compressed air to any refrigerant container or refrigerant component.**

Precautions for Refrigerant Connection

WARNING:

Make sure all refrigerant is discharged into the recycling equipment and the pressure in the system is less than atmospheric pressure. Then gradually loosen the discharge side hose fitting and remove it.

CAUTION:

When replacing or cleaning refrigerant cycle components, observe the following.

- When the compressor is removed, store it in the same position as it is when mounted on the car. Failure to do so will cause lubricant to enter the low pressure chamber.
- When connecting tubes, always use a torque wrench and a back-up wrench.
- After disconnecting tubes, immediately plug all openings to prevent entry of dirt and moisture.
- When installing an air conditioner in the vehicle, connect the pipes as the final stage of the operation. Do not remove the seal caps of pipes and other components until just before required for connection.
- Allow components stored in cool areas to warm to working area temperature before removing seal caps. This prevents condensation from forming inside A/C components.
- Thoroughly remove moisture from the refrigeration system before charging the refrigerant.
- Always replace used O-rings.
- When connecting tube, apply lubricant to portions shown in illustration. Be careful not to apply lubricant to threaded portion.
  Lubricant name: Nissan A/C System Oil Type R
  Part number: KLH00-PAGR0
- O-ring must be closely attached to inflated portion of tube.
- After inserting tube into union until O-ring is no longer visible, tighten nut to specified torque.
- After connecting line, conduct leak test and make sure that there is no leakage from connections. When the gas leaking point is found, disconnect that line and replace the O-ring. Then tighten connections of seal seat to the specified torque.

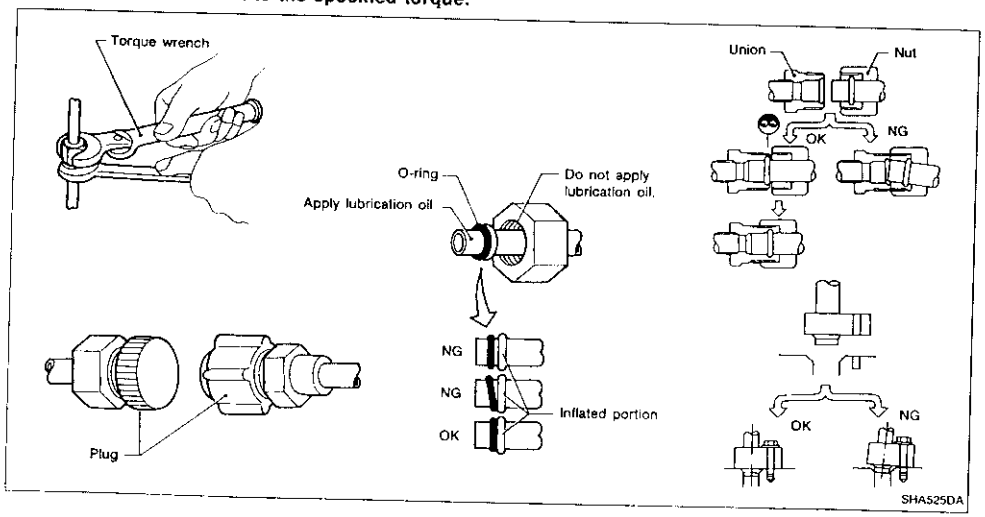

Precautions for Servicing Compressor

- Plug all openings to prevent moisture and foreign matter from entering.
- When the compressor is removed, store it in the same position as it is when mounted on the car.
- When replacing or repairing compressor, follow Lubricant — CHECKING AND ADJUSTING procedure exactly. Refer to HA-140.
- Keep friction surfaces between clutch and pulley clean. If the surface is contaminated, with lubricant, wipe it off by using a clean waste cloth moistened with thinner.
- After compressor service operation, turn the compressor shaft by hand more than five turns in both directions. This will equally distribute lubricant inside the compressor. After the compressor is installed, let the engine idle and operate the compressor for one hour.
- After replacing the compressor magnet clutch, apply voltage to the new one and check for normal operation.

Special Service Tools

DKV-14C model

Tool number Tool name	Description	
KV99231162 Clutch disc wrench	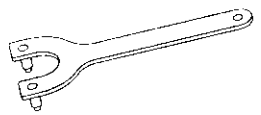 NT255	Removing shaft nut and clutch disc
KV99232340 Clutch disc puller	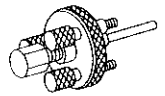 NT206	Removing clutch disc
KV99234330 Pulley installer	 NT207	Installing pulley

HFC-134a (R-134a) Service Tools and Equipment

Never mix HFC-134a refrigerant and/or its specified lubricant with CFC-12 (R-12) refrigerant and/or its lubrication oil.
Separate and non-interchangeable service equipment must be used for each type of refrigerant/lubricant.
Refrigerant container fittings, service hose fittings and service equipment fittings (equipment which handles refrigerant and/or lubricant) are different between CFC-12 (R-12) and HFC-134a (R-134a). This is to avoid mixed use of the refrigerants/lubricant.
Adapters that convert one size fitting to another must never be used: refrigerant/lubricant contamination will occur and compressor failure will result.

Tool name	Description	Note
HFC-134a (R-134a) refrigerant	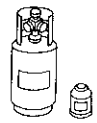 NT196	Container color: Light blue Container marking: HFC-134a (R-134a) Fitting size: Thread size • large container 1/2"-16 ACME
Nissan A/C System Oil Type R	NT197	Type: Poly alkyline glycol oil (PAG), type R Application: HFC-134a (R-134a) vane rotary compressors (Nissan only) Lubricity: 40 mℓ (1.4 Imp fl oz)
Recovery/Recycling/ Recharging equipment	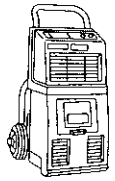 NT195	Function: Refrigerant Recovery and Recycling and Recharging
Electrical leak detector	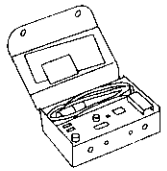 NT198	Power supply: • DC 12 V (Cigarette lighter)
Manifold gauge set (with hoses and couplers)	NT199	Identification: • The gauge face indicates R-134a. Fitting size: Thread size • 1/2"-16 ACME

HFC-134a (R-134a) Service Tools and Equipment (Cont'd)

Tool name	Description	Note
Service hoses • High side hose • Low side hose • Utility hose	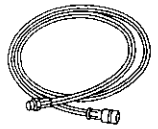 NT201	Hose color: • Low hose: Blue with black stripe • High hose: Red with black stripe • Utility hose: Yellow with black stripe or green with black stripe Hose fitting to gauge: • 1/2"-16 ACME
Service couplers • High side coupler • Low side coupler	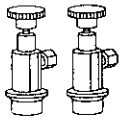 NT202	Hose fitting to service hose: • M14 x 1.5 fitting is optional or permanently attached.
Refrigerant weight scale	NT200	For measuring of refrigerant Fitting size: Thread size • 1/2"-16 ACME
Vacuum pump (Including the isolator valve)	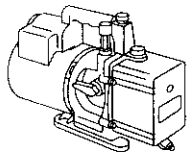 NT203	Capacity: • Air displacement: 4 CFM • Micron rating: 20 microns • Oil capacity: 482 g (17 oz) Fitting size: Thread size • 1/2"-16 ACME

Precautions for Service Equipment

RECOVERY/RECYCLING EQUIPMENT

Be certain to follow the manufacturers instructions for machine operation and machine maintenance. Never introduce any refrigerant other than that specified into the machine.

ELECTRONIC LEAK DETECTOR

Be certain to follow the manufactures instructions for tester operation and tester maintenance.

VACUUM PUMP

The lubricant contained inside the vacuum pump is not compatible with the specified lubricant for HFC-134a (R-134a) A/C systems. The vent side of the vacuum pump is exposed to atmospheric pressure. So the vacuum pump lubricant may migrate out of the pump into the service hose. This is possible when the pump is switched off after evacuation (vacuuming) and hose is connected to it.

To prevent this migration, use a manual valve placed near the hose-to-pump connection, as follows.

- Usually vacuum pumps have a manual isolator valve as part of the pump. Close this valve to isolate the service hose from the pump.
- For pumps without an isolator, use a hose equipped with a manual shut-off valve near the pump end. Close the valve to isolate the hose from the pump.
- If the hose has an automatic shut off valve, disconnect the hose from the pump. As long as the hose is connected, the valve is open and lubricant may migrate.

Some one-way valves open when vacuum is applied and close under a no vacuum condition. Such valves may restrict the pump's ability to pull a deep vacuum and are not recommended.

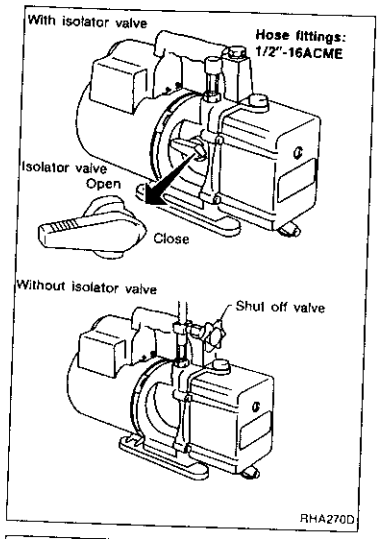

MANIFOLD GAUGE SET

Be certain that the gauge face indicates R-134a or 134a. Be sure the gauge set has 1/2"-16 ACME threaded connections for service hoses. Confirm the set has been used only with refrigerant HFC-134a (R-134a) and specified lubricants.

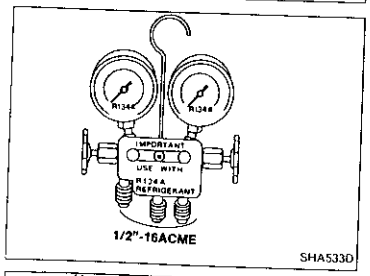

SERVICE HOSES

Be certain that the service hoses display the markings described (colored hose with black stripe). All hoses must include positive shut off devices (either manual or automatic) near the end of the hoses opposite the manifold gauge.

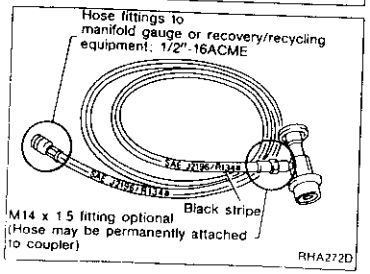

Precautions for Service Equipment (Cont'd)

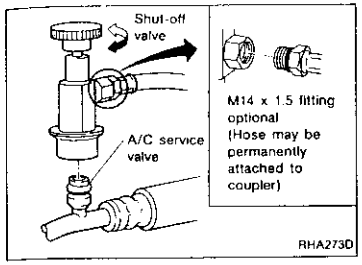

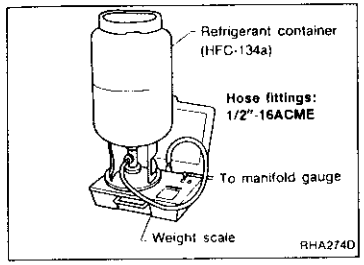

SERVICE COUPLERS

Never attempt to connect HFC-134a (R-134a) service couplers to an CFC-12 (R-12) A/C system. The HFC-134a (R-134a) couplers will not properly connect to the CFC-12 (R-12) system. However, if an improper connection is attempted, discharging and contamination may occur.

Shut off valve rotation	A/C service valve
Clockwise	Open
Counterclockwise	Close

REFRIGERANT WEIGHT SCALE

Verify that no refrigerant other than HFC-134a (R-134a) and specified lubricants have been used with the scale. If the scale controls refrigerant flow electronically, the hose fitting must be 1/2"-16 ACME.

CHARGING CYLINDER

Using a charging cylinder is not recommended. Refrigerant may be vented into air from cylinder's top valve when filling the cylinder with refrigerant. Also, the accuracy of the cylinder is generally less than that of an electronic scale or of quality recycle/recharge equipment.

Refrigeration Cycle

REFRIGERANT FLOW

The refrigerant flow is in the standard pattern. Refrigerant flows through the compressor, condenser, liquid tank, evaporator and back to the compressor.
The refrigerant evaporation through the evaporator coil is controlled by an externally equalized expansion valve, located inside the evaporator case.

FREEZE PROTECTION

The compressor cycles on and off to maintain the evaporator temperature within a specified range. When the evaporator coil temperature falls below a specified point, the thermo control amplifier interrupts the compressor operation. When the evaporator coil temperature rises above the specification, the thermo control amplifier allows compressor operation.

REFRIGERANT SYSTEM PROTECTION

Triple-pressure switch

The triple pressure switch is located on the liquid tank. If the system pressure rises or falls out of specifications, the switch opens to interrupt compressor clutch operation. Triple-pressure switch closes to turn on the cooling fan and reduce system pressure.

Fusible plug

Open at temperature above 105°C (221°F), thereby discharging refrigerant to the atmosphere. If this plug is melted and opened, check the refrigerant line and replace liquid tank.

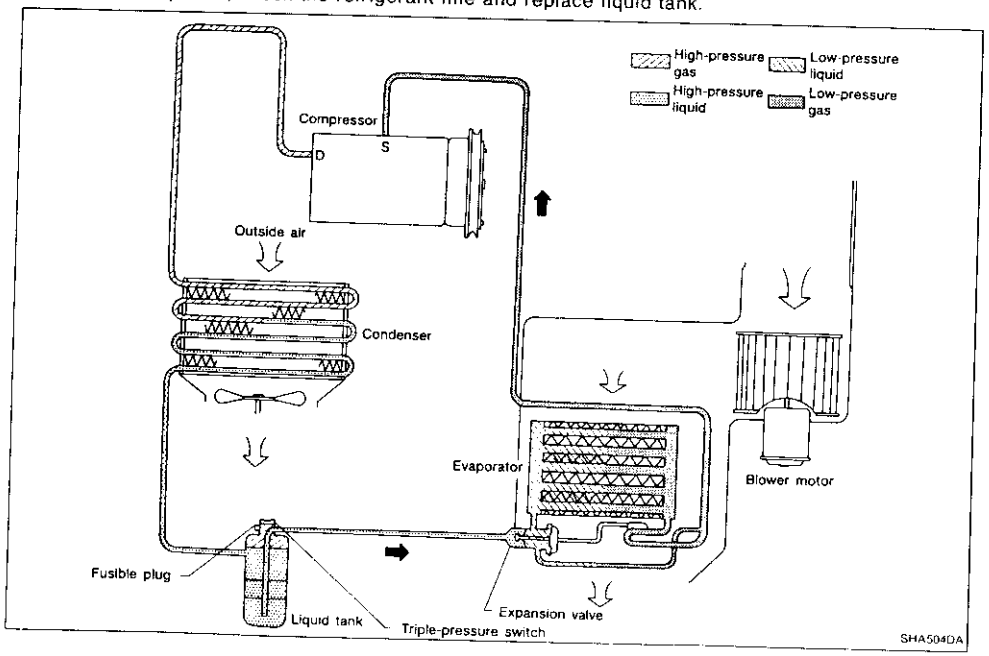

Component Layout

SEC. 270•271•272•273•685

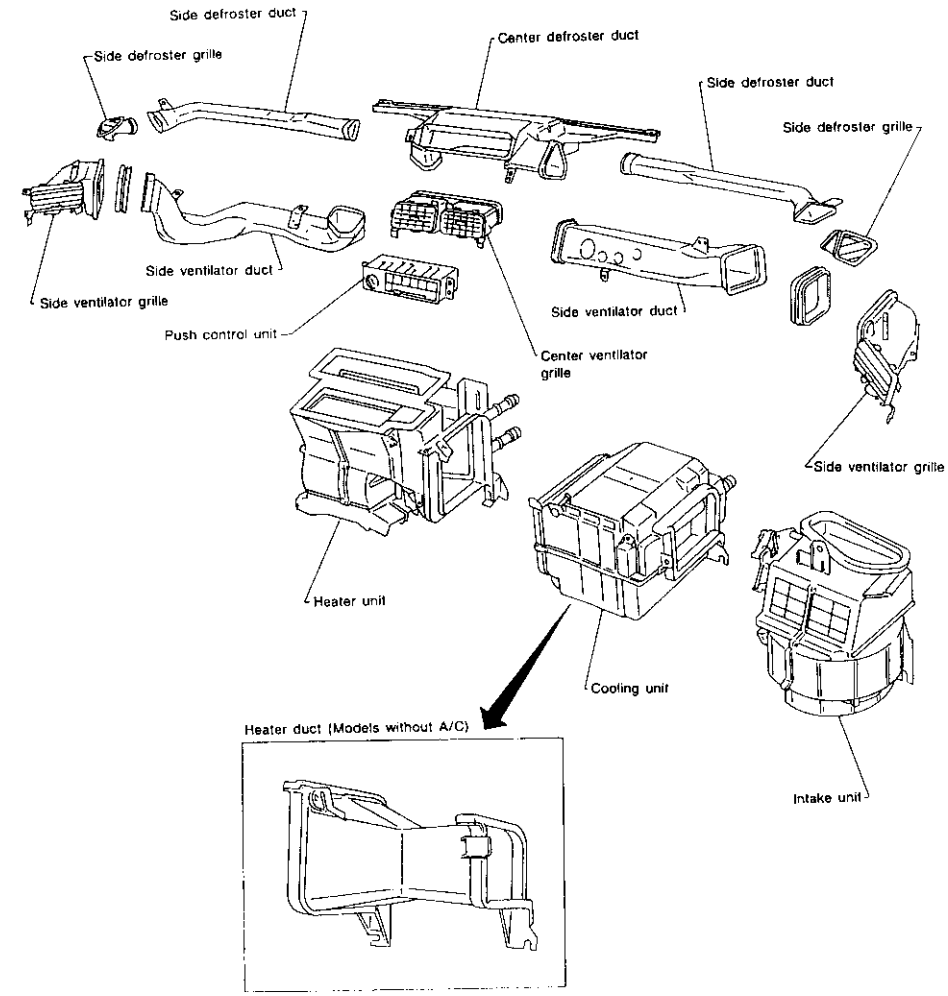

RHA372F

Discharge Air Flow

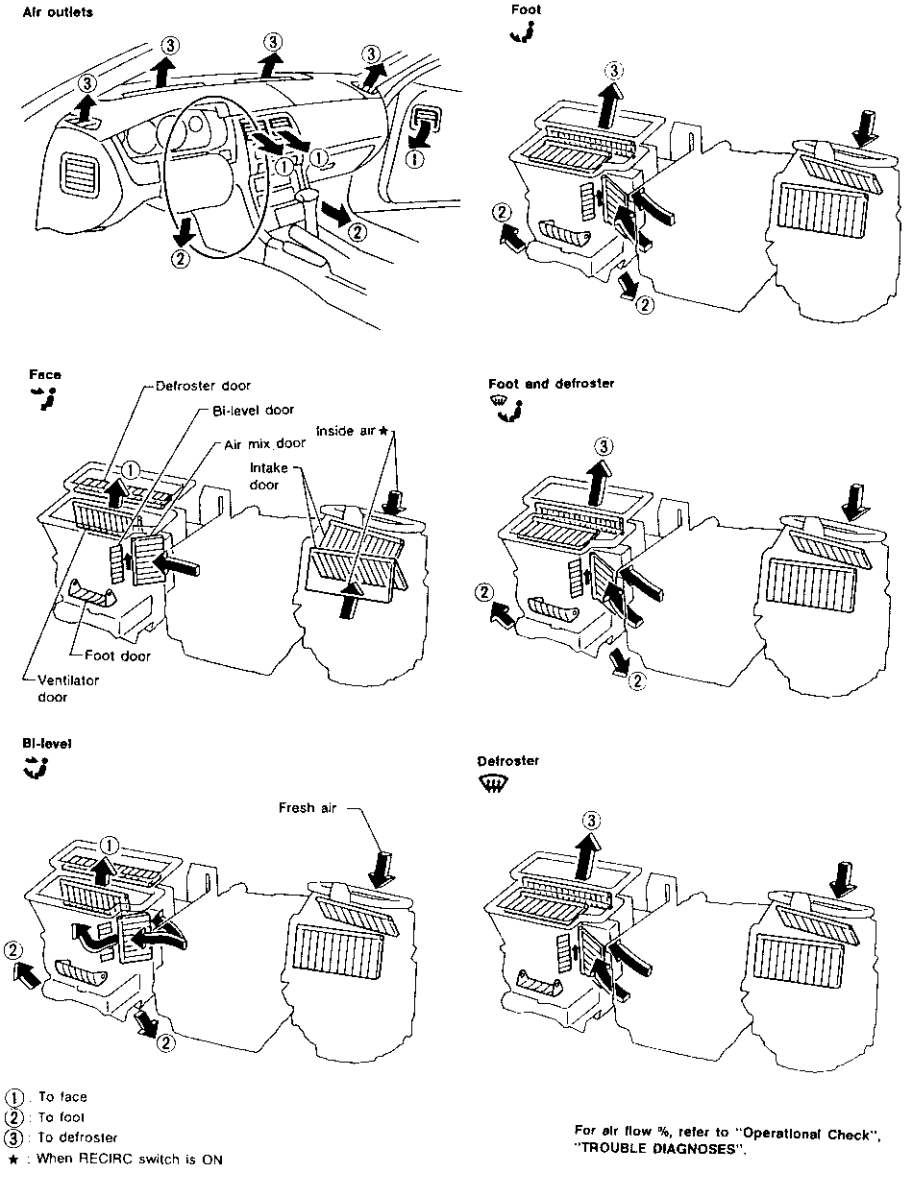

① : To face
② : To foot
③ : To defroster
★ : When RECIRC switch is ON

For air flow %, refer to "Operational Check", "TROUBLE DIAGNOSES".

RHA563E

Control Operation

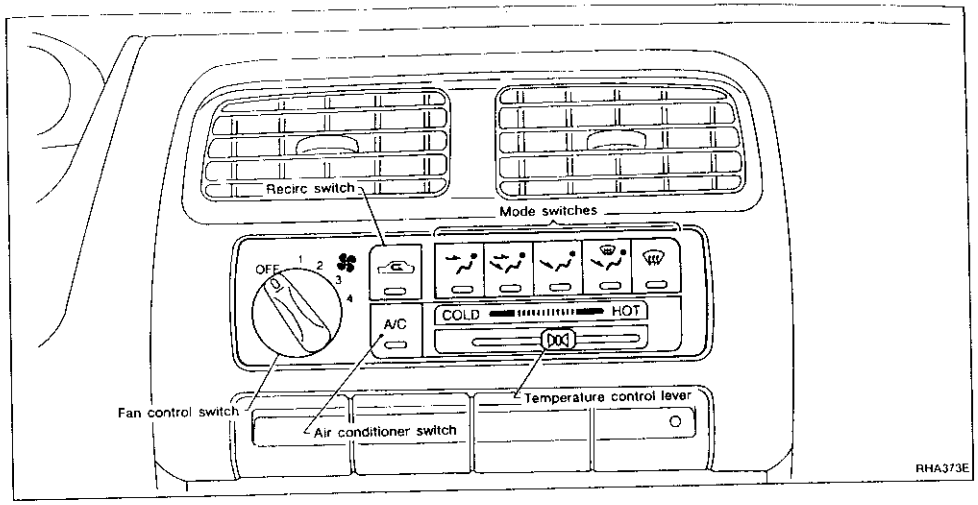

FAN CONTROL SWITCH

This switch turns the fan ON and OFF, and controls fan speed.

MODE SWITCHES

These switches control the outlet air flow.
In "DEF" or "F/D" mode, the intake door is set to "FRESH". The compressor turns on in the "DEF" mode.

TEMPERATURE CONTROL LEVER

This lever allows adjustment of the temperature of the outlet air.

RECIRC SWITCH

OFF position:
Outside air is drawn into the passenger compartment.
ON position:
Interior air is recirculated inside the vehicle.
RECIRC is canceled when DEF or F/D is selected, RECIRC resumes when another mode is chosen.

AIR CONDITIONER SWITCH

The air conditioner switch controls the A/C system. When the switch is depressed with the fan ON, the compressor will turn ON. The indicator lamp will also light.

The air conditioner cooling function operates only when the engine is running.

Contents

How to Perform Trouble Diagnoses for Quick and Accurate Repair HA-15
Operational Check HA-16
Symptom Chart HA-18
Preliminary Check HA-20
PRELIMINARY CHECK 1
(Intake door is not set at "FRESH" in DEF or F/D mode.) HA-20
PRELIMINARY CHECK 2
(A/C does not blow cold air.) HA-21
PRELIMINARY CHECK 3
(Magnet clutch does not engage in DEF mode.) HA-22
PRELIMINARY CHECK 4
(Air outlet does not change.) HA-23
PRELIMINARY CHECK 5
(Noise) HA-24
PRELIMINARY CHECK 6
(Insufficient heating) HA-25
Performance Test Diagnoses HA-26
INSUFFICIENT COOLING HA-26
Performance Chart HA-28
TEST CONDITION HA-28
TEST READING HA-28
Trouble Diagnoses for Abnormal Pressure HA-29
Harness Layout HA-33
Circuit Diagram — Heater HA-36
Wiring Diagram — HEAT — HA-37
Circuit Diagram — Manual Air Conditioner HA-43
Circuit Diagram — Push Control Unit HA-44
Wiring Diagram — A/C, M — HA-45
Main Power Supply and Ground Circuit Check HA-55
Diagnostic Procedure 1
(SYMPTOM: Blower motor does not rotate.) HA-56
Diagnostic Procedure 2
(SYMPTOM: Air outlet does not change.) HA-58
Diagnostic Procedure 3
(SYMPTOM: Intake door does not change in VENT, B/L or FOOT mode.) HA-60
Diagnostic Procedure 4
(SYMPTOM: Air mix door does not change.) HA-61
Diagnostic Procedure 5
(SYMPTOM: Bi-level (B/L) door does not operate.) HA-63
Diagnostic Procedure 6
(SYMPTOM: Magnet clutch does not engage when A/C switch and fan switch are ON.) HA-64
Electrical Components Inspection HA-68
Control Linkage Adjustment HA-70

How to Perform Trouble Diagnoses for Quick and Accurate Repair

WORK FLOW

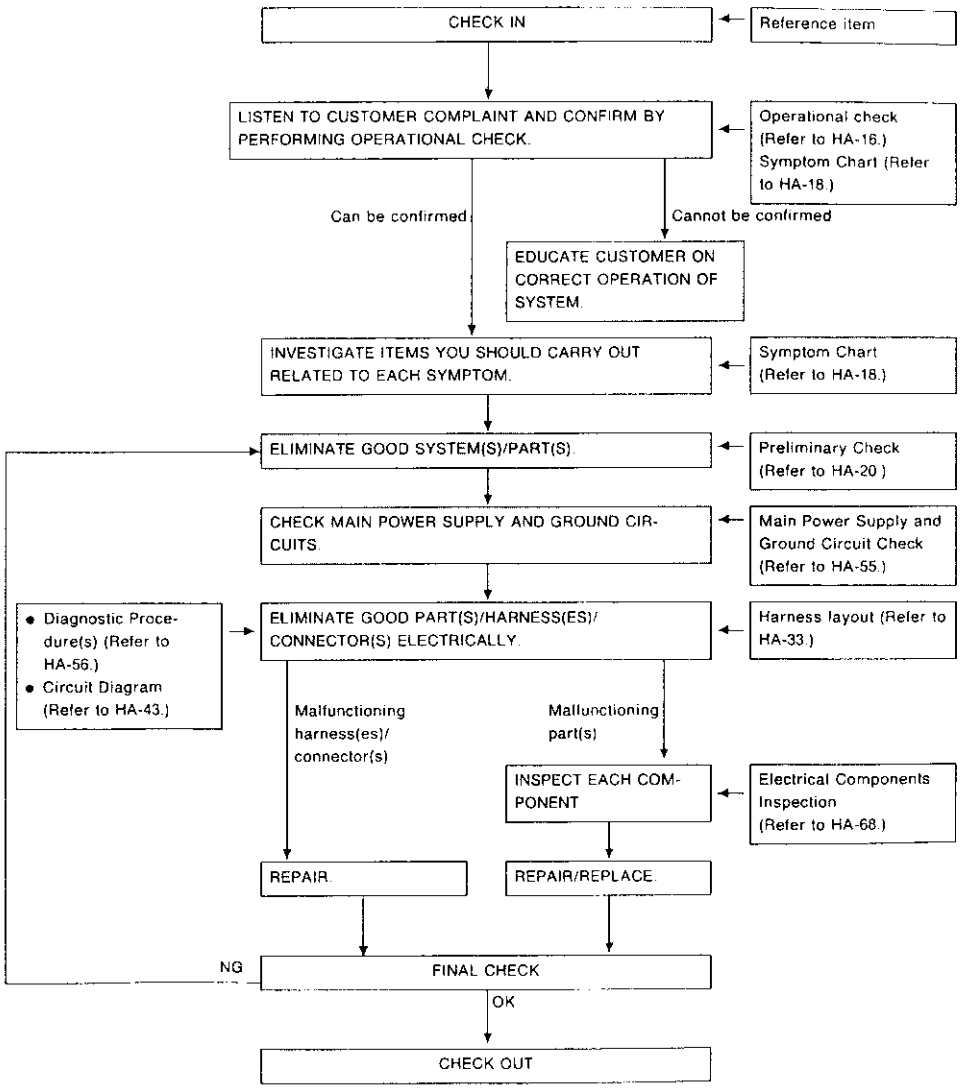

Operational Check

The purpose of the operational check is to confirm that the system is as it should be. The systems which will be checked are the blower, mode (discharge air), intake air, temperature decrease, temperature increase and A/C switch.

CONDITIONS:

- **Engine running and at normal operating temperature.**

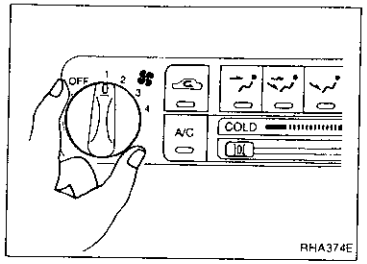

PROCEDURE:

1. Check blower

1) Turn fan switch to 1-speed.
   Blower should operate on low speed.
2) Then turn fan switch to 2-speed.
3) Continue checking blower speed until all speeds are checked.
4) Leave blower on speed 4.

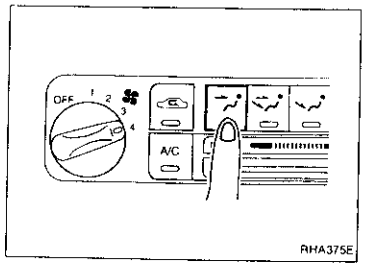

2. Check discharge air.

1) Press each mode switch.

Discharge air flow

Switch mode/ indicator	Air outlet/distribution		
	Face	Foot	Defroster
	100%	–	–
	60%	40%	–
	–	80%	20%
	–	60%	40%
	–	–	100%

RHA376FA

2) Confirm that discharge air comes out according to the air distribution table at left.

Refer to "Discharge Air Flow", "DESCRIPTION" (HA-12).

NOTE:

Confirm that the compressor clutch is engaged (visual inspection) and intake door position is at FRESH when the DEF button is pressed.

Confirm that the intake door position is at FRESH when the F/D button is pressed.

Intake door position is checked in the next step.

Operational Check (Cont'd)

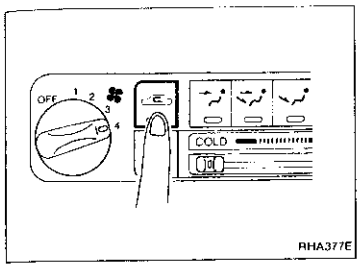

3. Check recirc

1) Press REC switch
   Recirc indicator should illuminate.
2) Listen for intake door position change (you should hear blower sound change slightly).

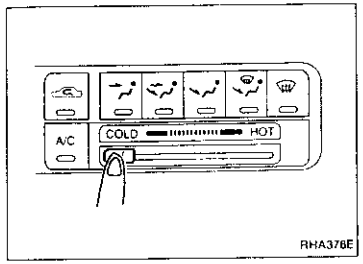

4. Check temperature decrease

1) Slide temperature control lever to full cold.
2) Check for cold air at discharge air outlets.

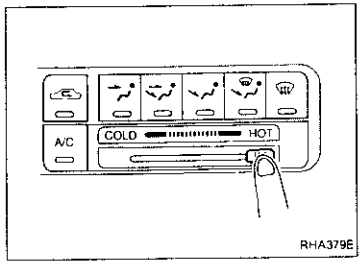

5. Check temperature increase

1) Slide temperature control lever to full hot.
2) Check for hot air at discharge air outlets.

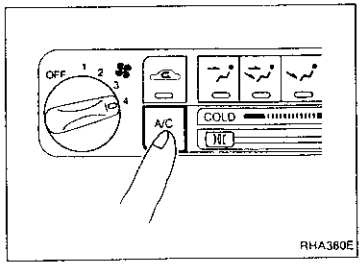

6. Check air conditioning switch

Move the fan control switch to the desired (1 to 4 speed) position and push the A/C switch to turn ON the air conditioner.
The indicator lamp should come on when air conditioner is ON.

Symptom Chart

DIAGNOSTIC TABLE

PROCEDURE	Preliminary Check						Diagnostic Procedure						Main Power Supply and Ground Circuit Check			
REFERENCE PAGE	HA-20	HA-21	HA-22	HA-23	HA-24	HA-25	HA-56	HA-58	HA-60	HA-61	HA-63	HA-64	HA-55	HA-55	HA-55	HA-55
SYMPTOM	Preliminary check 1	Preliminary check 2	Preliminary check 3	Preliminary check 4	Preliminary check 5	Preliminary check 6	Diagnostic procedure 1	Diagnostic procedure 2	Diagnostic procedure 3	Diagnostic procedure 4	Diagnostic procedure 5	Diagnostic procedure 6	15A Fuses (#7, #8)	7.5A Fuse (#6 or #15)	7.5A Fuse (#42)	Push control unit
A/C does not blow cold air.		❶					○			○			○	○		
Insufficient heating.						❶	○			○						
Blower motor does not rotate.		❶					❷						○			
Air outlet does not change.				❶				❷						○		○
Intake door does not change in VENT, B/L or FOOT mode.									❶							○
Intake door is not set at "FRESH" in DEF or F/D mode.	❶								○							○
Air mix door does not change.		❶								❷						
Bi-level door does not change.											❶					
Magnet clutch does not engage when A/C switch and fan switch are ON.		❶										❷		○	○	
Magnet clutch does not engage in DEF mode.		❶	❷									○		○	○	
Noise					❶											

❶, ❷: The number means checking order.
○ : Checking order depends on malfunction in each flow chart

Symptom Chart (Cont'd)

Electrical Components Inspection																						
HA-68	HA-68	—	—	—	—	—	—	—	HA-68	—	—	—	—	HA-70	HA-69	—	HA-70	Refer to EC section.	—
Blower motor	Resistor	A/C switch	REC switch	VENT switch	B/L switch	FOOT switch	F/D switch	DEF switch	Fan switch	Mode door motor	Intake door motor	Air mix door motor	BI-LEVEL (B/L) door motor	A/C relay	Triple-pressure switch	Compressor (Magnet clutch)	Thermal protector	ECM (ECCS control module)	Harness
					Push control unit											Compressor			
○	○	○							○			○		○	○	○	○	○	○
												○							○
○	○								○										○
				○	○	○	○		○				○						○
			○								○								○
			○								○								○
												○							○
													○						○
		○							○					○	○	○	○	○	○
								○	○					○	○	○	○	○	○

Preliminary Check

PRELIMINARY CHECK 1

Intake door is not set at "FRESH" in DEF or F/D mode.

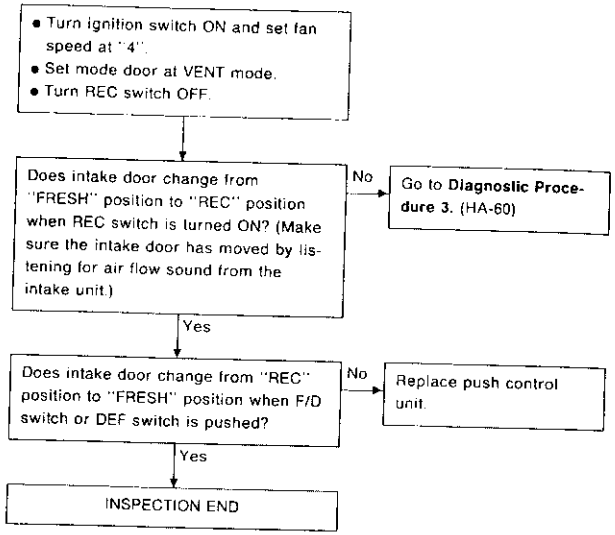

Preliminary Check (Cont'd)

PRELIMINARY CHECK 2

A/C does not blow cold air.

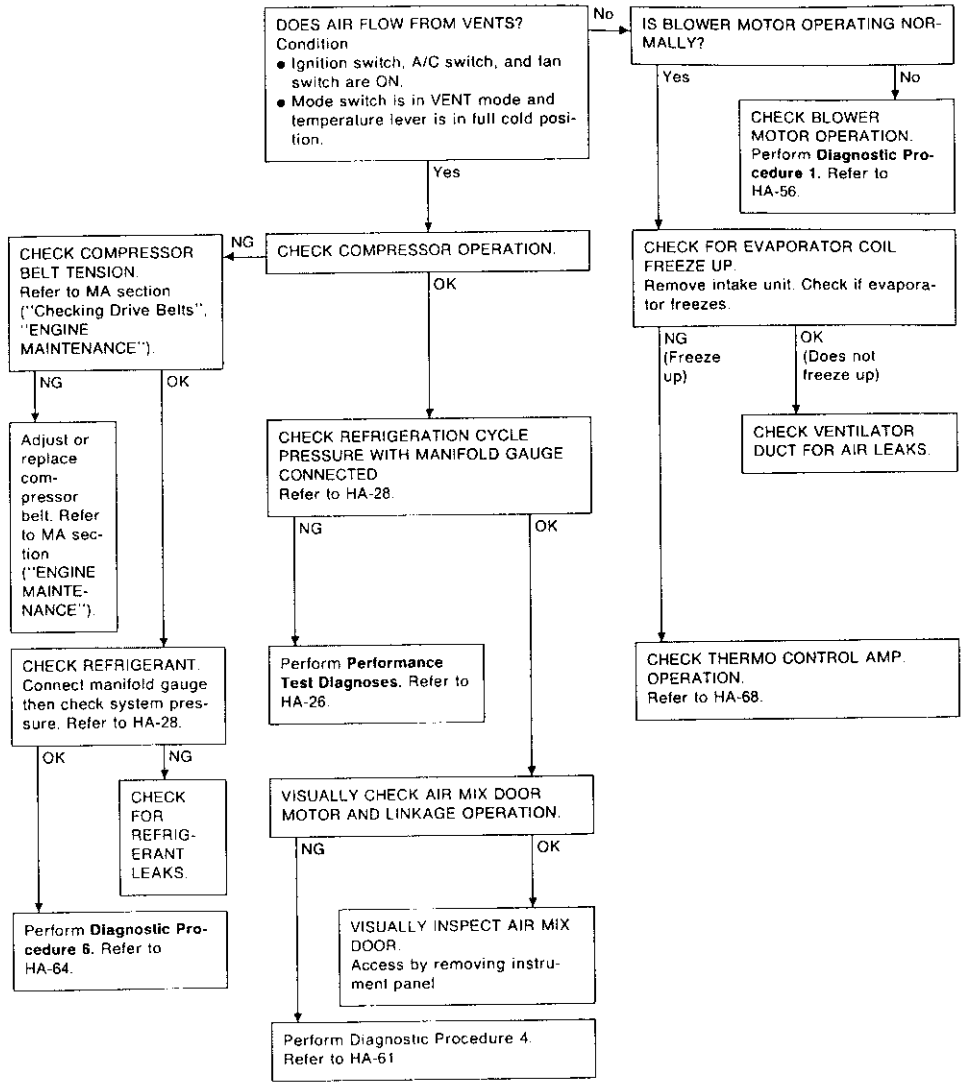

Preliminary Check (Cont'd)

PRELIMINARY CHECK 3

Magnet clutch does not engage in DEF mode.

- **Perform PRELIMINARY CHECK 2 before referring to the following flow chart.**

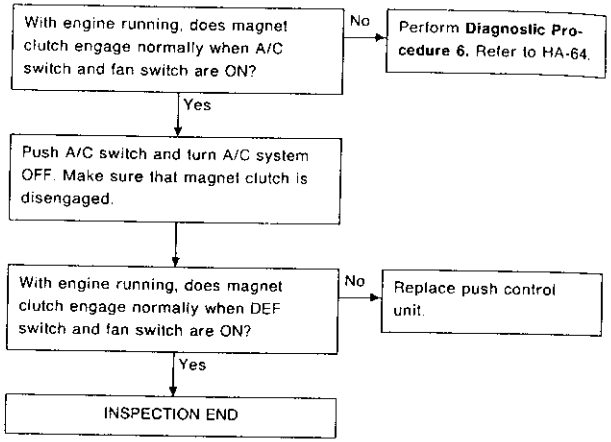

Preliminary Check (Cont'd)

PRELIMINARY CHECK 4

Air outlet does not change.

TURN IGNITION SWITCH ON. DOES AIR COME OUT NORMALLY FROM EACH DUCT WHEN EACH MODE SWITCH IS PUSHED?

No → Perform **Diagnostic Procedure 2.** Refer to HA-58.

Switch mode/ Indicator	Air outlet/distribution		
	Face	Foot	Defroster
	100%	—	—
	60%	40%	—
	—	80%	20%
	—	60%	40%
	—	—	100%

Yes

INSPECTION END

PRELIMINARY CHECK 5

Noise

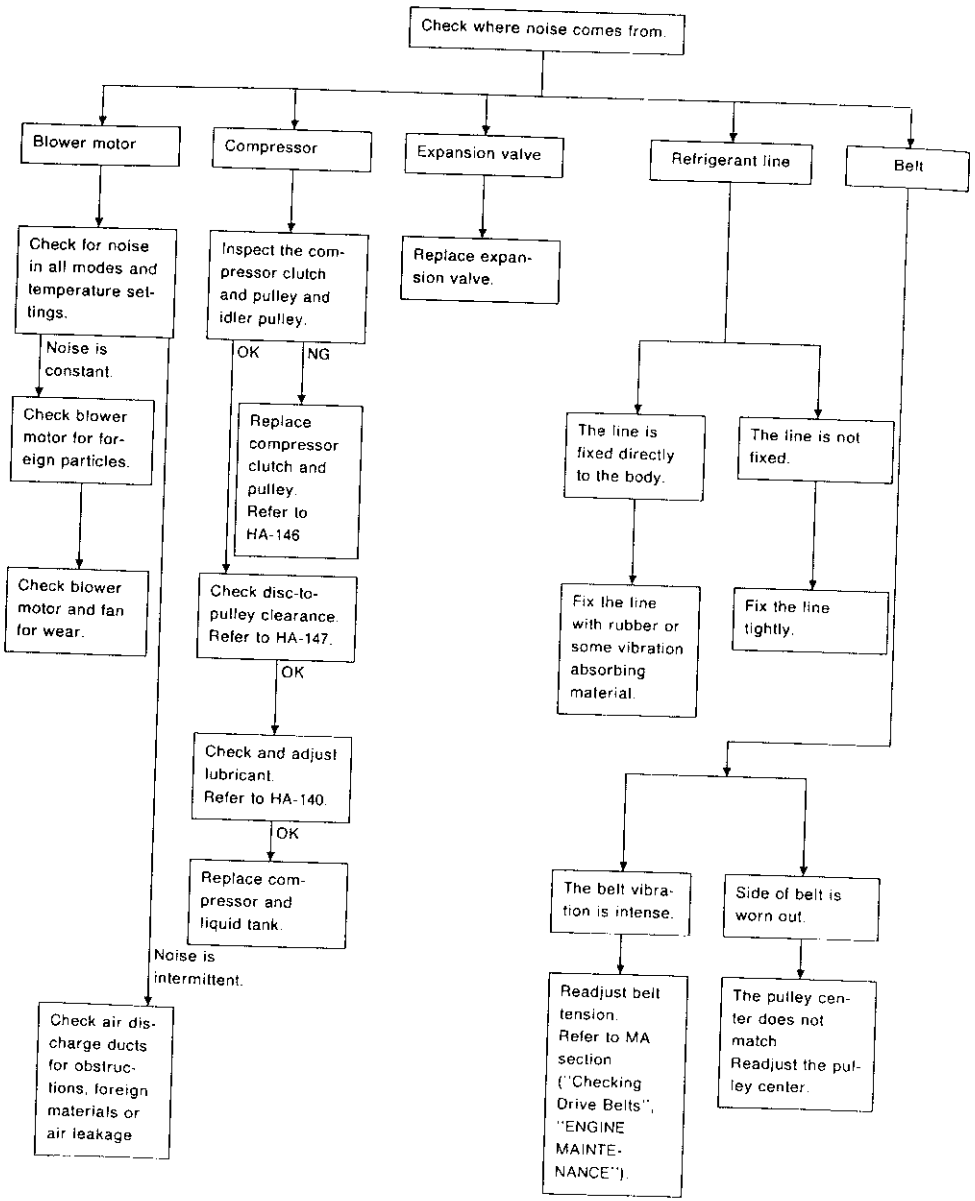

PRELIMINARY CHECK 6

Insufficient heating

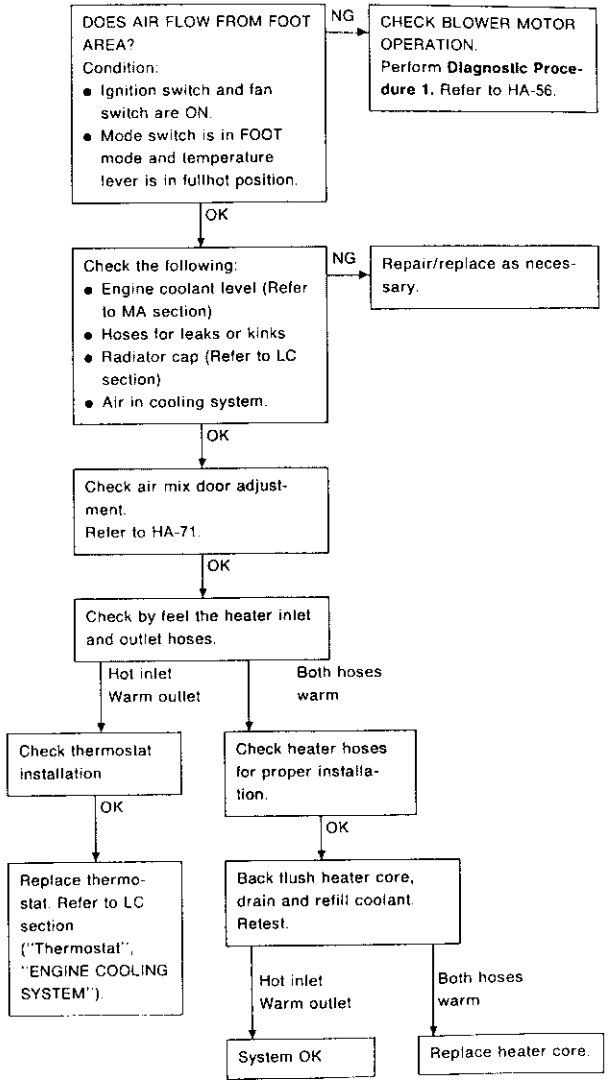

Performance Test Diagnoses

INSUFFICIENT COOLING

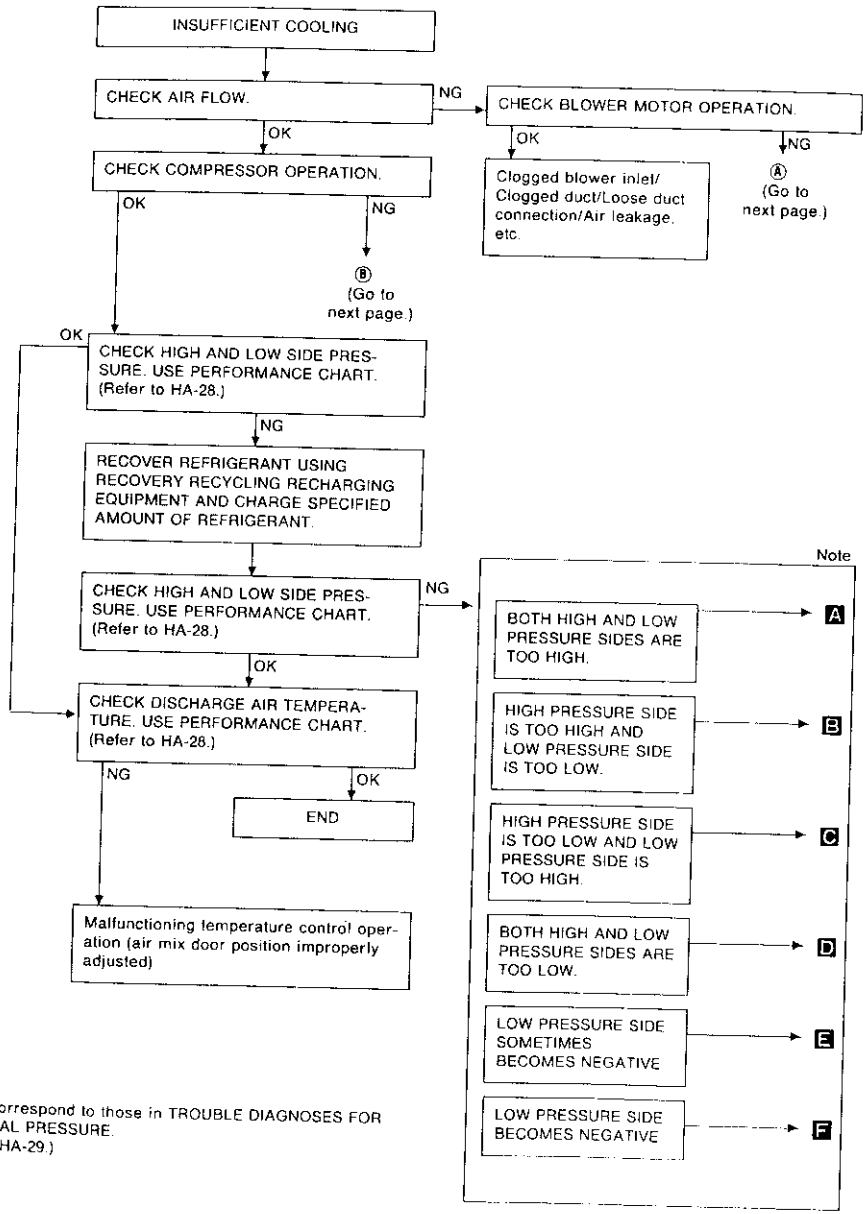

Note: A-F correspond to those in TROUBLE DIAGNOSES FOR ABNORMAL PRESSURE. (Refer to HA-29.)

Performance Test Diagnoses (Cont'd)

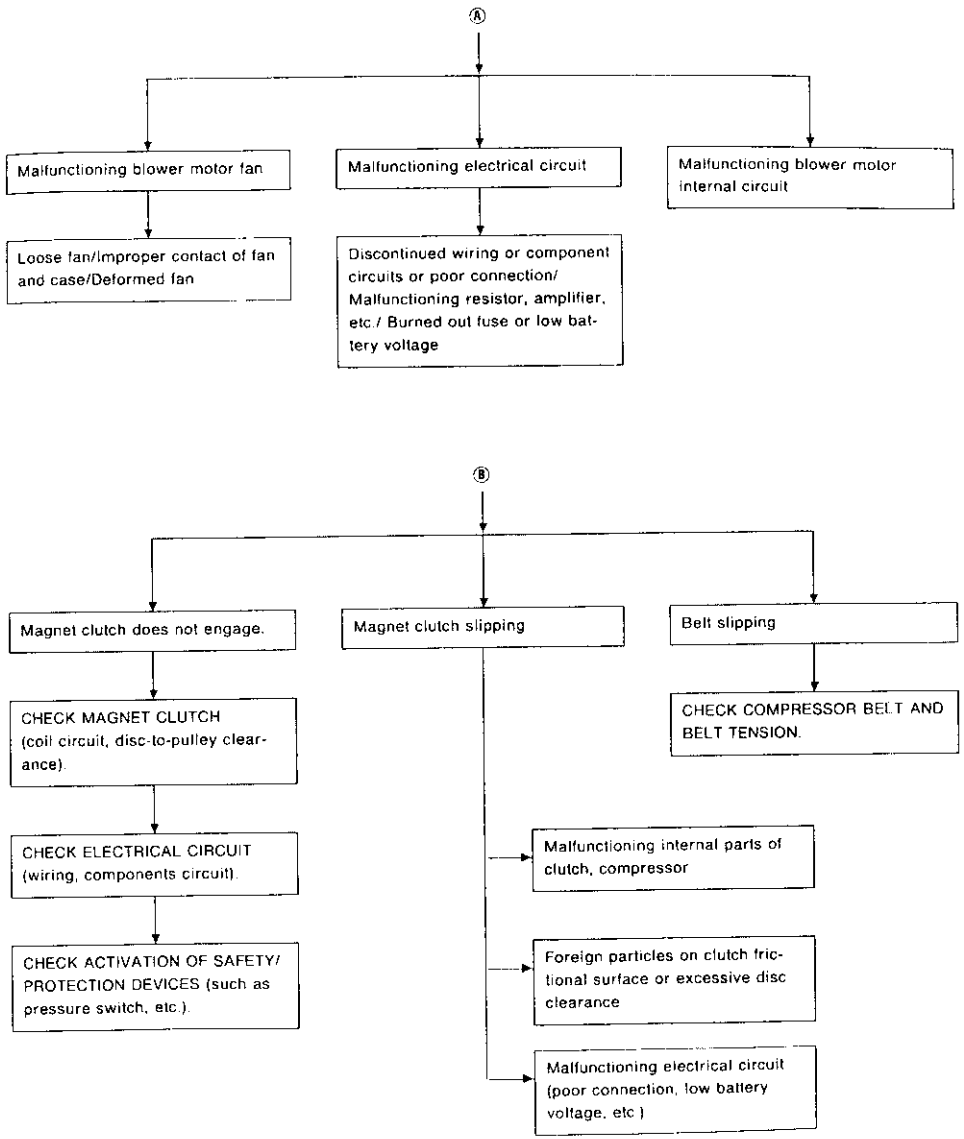

Performance Chart

TEST CONDITION

Testing must be performed as follows:

Vehicle location: Indoors or in the shade (in a well ventilated place)
Doors: Closed
Door window: Open (Front driver side only)
Hood: Open
TEMP. setting: Max. COLD
Discharge Air: Face Vent
RECIRC switch: (Recirculation) ON
FAN speed: High speed
A/C switch: ON
Engine speed: Idle speed
Operate the air conditioning system for 10 minutes before taking measurements.

TEST READING

Recirculating-to-discharge air temperature table

Inside air at blower assembly inlet for RECIRC*		Discharge air temperature at center ventilator °C (°F)
Relative humidity %	Air temperature °C (°F)	
50 - 60	20 (68)	6.2 - 8.8 (43 - 48)
	25 (77)	10.4 - 13.5 (51 - 56)
	30 (86)	14.6 - 18.2 (58 - 65)
	35 (95)	18.7 - 23.0 (66 - 73)
60 - 70	20 (68)	8.8 - 11.6 (48 - 53)
	25 (77)	13.5 - 16.8 (56 - 62)
	30 (86)	18.2 - 22.0 (65 - 72)
	35 (95)	23.0 - 27.2 (73 - 81)

* Thermometer should be placed at intake unit under RH side of instrument panel.

Ambient air temperature-to-operating pressure table

Ambient air		High-pressure (Discharge side) kPa (bar, kg/cm², psi)	Low-pressure (Suction side) kPa (bar, kg/cm², psi)
Relative humidity %	Air temperature °C (°F)		
50 - 70	25 (77)	814 - 991 (8.14 - 9.91, 8.3 - 10.1, 118 - 144)	147 - 216 (1.47 - 2.16, 1.5 - 2.2, 21 - 31)
	30 (86)	941 - 1,177 (9.41 - 11.77, 9.6 - 12.0, 137 - 171)	157 - 245 (1.57 - 2.45, 1.6 - 2.5, 23 - 36)
	35 (95)	1,108 - 1,402 (11.08 - 14.02, 11.3 - 14.3, 161 - 203)	177 - 284 (1.77 - 2.84, 1.8 - 2.9, 26 - 41)
	40 (104)	1,304 - 1,677 (13.04 - 16.77, 13.3 - 17.1, 189 - 243)	216 - 343 (2.16 - 3.43, 2.2 - 3.5, 31 - 50)

If pressure is not within range, refer to HA-29, "Trouble Diagnoses for Abnormal Pressure".

Trouble Diagnoses for Abnormal Pressure

Whenever system's high and/or low side pressure is abnormal, diagnose using a manifold gauge. The marker above the gauge scale in the following tables indicates the standard (normal) pressure range. Since the standard (normal) pressure, however, differs from vehicle to vehicle, refer to HA-28 ("Ambient air temperature-to-compressor pressure table").

Gauge indication	Refrigerant cycle	Probable cause	Corrective action
Both high and low-pressure sides are too high. A 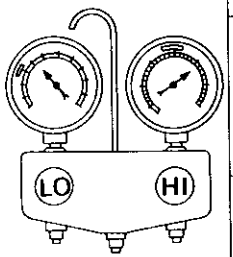 AC359A	• Pressure is reduced soon after water is splashed on condenser	Excessive refrigerant charge in refrigeration cycle	Reduce refrigerant until specified pressure is obtained.
	Air suction by cooling fan is insufficient.	Insufficient condenser cooling performance ↓ ① Condenser fins are clogged. ② Improper fan rotation of cooling fan	• Clean condenser. • Check and repair cooling fan as necessary.
	• Low-pressure pipe is not cold. • When compressor is stopped high-pressure value quickly drops by approximately 196 kPa (2.0 bar, 2 kg/cm², 28 psi). It then decreases gradually thereafter.	Poor heat exchange in condenser (After compressor operation stops, high pressure decreases too slowly.) ↓ Air in refrigeration cycle	Evacuate repeatedly and recharge system.
	Engine tends to overheat.	Engine cooling systems malfunction.	Check and repair each engine cooling system.
	• An area of the low-pressure pipe is colder than areas near the evaporator outlet. • Plates are sometimes covered with frost.	• Excessive liquid refrigerant on low-pressure side • Excessive refrigerant discharge flow • Expansion valve is open a little compared with the specification. ↓ ① Improper thermal valve installation ② Improper expansion valve adjustment	Replace expansion valve.

Trouble Diagnoses for Abnormal Pressure (Cont'd)

Gauge indication	Refrigerant cycle	Probable cause	Corrective action
High-pressure side is too high and low-pressure side is too low. B 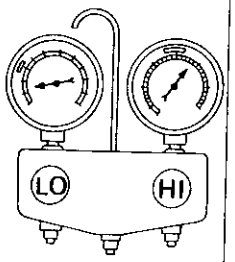 AC360A	Upper side of condenser and high-pressure side are hot, however, liquid tank is not so hot.	High-pressure lube or parts located belween compressor and condenser are clogged or crushed.	• Check and repair or replace malfunctioning parts. • Check lubricant for contamination.
High-pressure side is too low and low-pressure side is too high. C 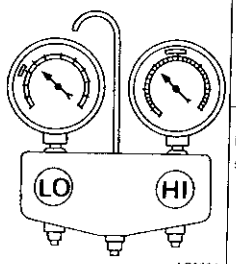 AC356A	High and low-pressure sides become equal soon after compressor operation stops.	Compressor pressure operation is improper. ↓ Damaged inside compressor packings	Replace compressor.
	No temperature difference between high and low-pressure sides	Compressor discharge capacity does not change (Compressor stroke is set at maximum.)	Replace compressor.
Both high- and low-pressure sides are too low. D 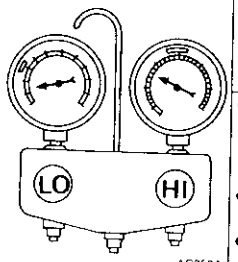 AC353A	• There is a big temperature difference between liquid tank outlet and inlet. Outlet temperature is extremely low. • Liquid tank inlet and expansion valve are frosted.	Liquid tank inside is clogged a little	• Replace liquid tank. • Check lubricant for contamination
	• Temperature of expansion valve inlet is extremely low as compared with areas near liquid tank. • Expansion valve inlet may be frosted • Temperature difference occurs somewhere in high-pressure side	High-pressure pipe located between liquid tank and expansion valve is clogged.	• Check and repair malfunctioning parts. • Check lubricant for contamination.

Trouble Diagnoses for Abnormal Pressure (Cont'd)

Gauge indication	Refrigerant cycle	Probable cause	Corrective action
Both high- and low-pressure sides are too low. D 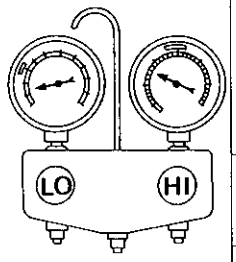 AC353A	There is a big temperature difference between expansion valve inlet and outlet while the valve itself is frosted.	Expansion valve closes a little compared with the specification. ↓ ① Improper expansion valve adjustment ② Malfunctioning thermal valve ③ Outlet and inlet may be clogged	• Remove foreign particles by using compressed air. • Check lubricant for contamination
	An area of the low-pressure pipe is colder than areas near the evaporator outlet	Low-pressure pipe is clogged or crushed	• Check and repair malfunctioning parts. • Check lubricant for contamination.
	Air flow volume is not enough or is too low.	Evaporator is frozen. ↓ Compressor discharge capacity does not change. (Compressor stroke is set at maximum length.)	Replace compressor.
Low-pressure side sometimes becomes negative. E 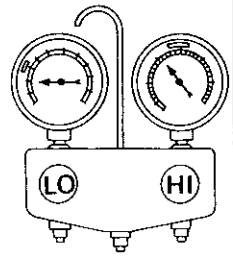 AC354A	• Air conditioning system does not function and does not cyclically cool the compartment air. • The system constantly functions for a certain period of time after compressor is stopped and restarted.	Refrigerant does not discharge cyclically. ↓ Moisture is frozen at expansion valve outlet and inlet. ↓ Water is mixed with refrigerant	• Drain water from refrigerant or replace refrigerant. • Replace liquid tank.

Trouble Diagnoses for Abnormal Pressure (Cont'd)

Gauge indication	Refrigerant cycle	Probable cause	Corrective action
Low-pressure side becomes negative. F 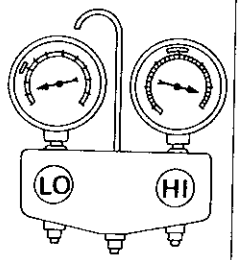 AC362A	Liquid tank or front/rear side of expansion valve's pipe is frosted or dewed.	High-pressure side is closed and refrigerant does not flow. ↓ Expansion valve or liquid tank is frosted.	Leave the system at rest until no frost is present. Start it again to check whether or not the problem is caused by water or foreign particles. If water is the cause, initially cooling is okay. Then the water freezes, causing a blockage. • If the problem is due to water, drain water from refrigerant or replace refrigerant. • If due to foreign particles, remove expansion valve and remove the particles with dry and compressed air (not shop air). • If either of the above methods cannot correct the problem, replace expansion valve. • Replace liquid tank • Check lubricant for contamination

Harness Layout

ENGINE COMPARTMENT

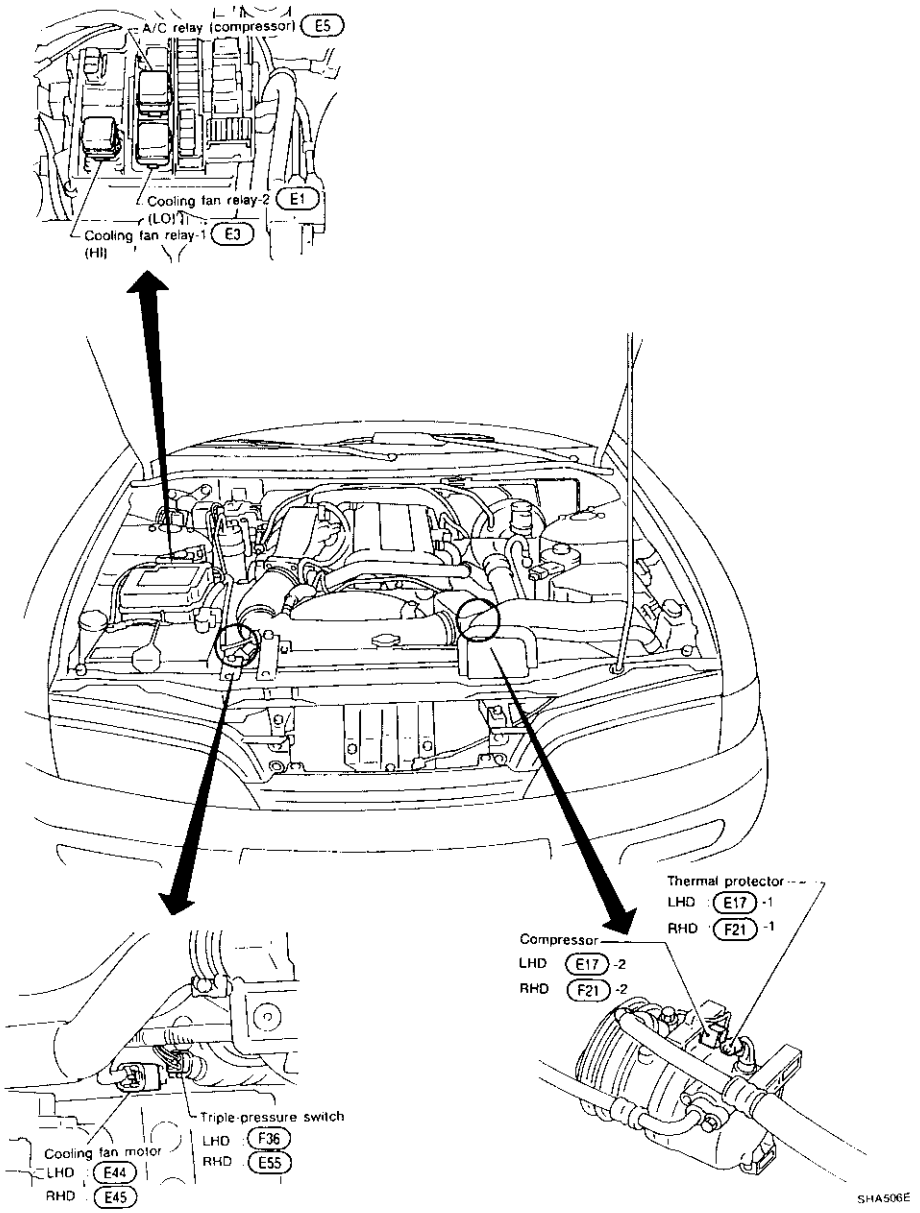

Harness Layout (Cont'd)

PASSENGER COMPARTMENT

LHD model

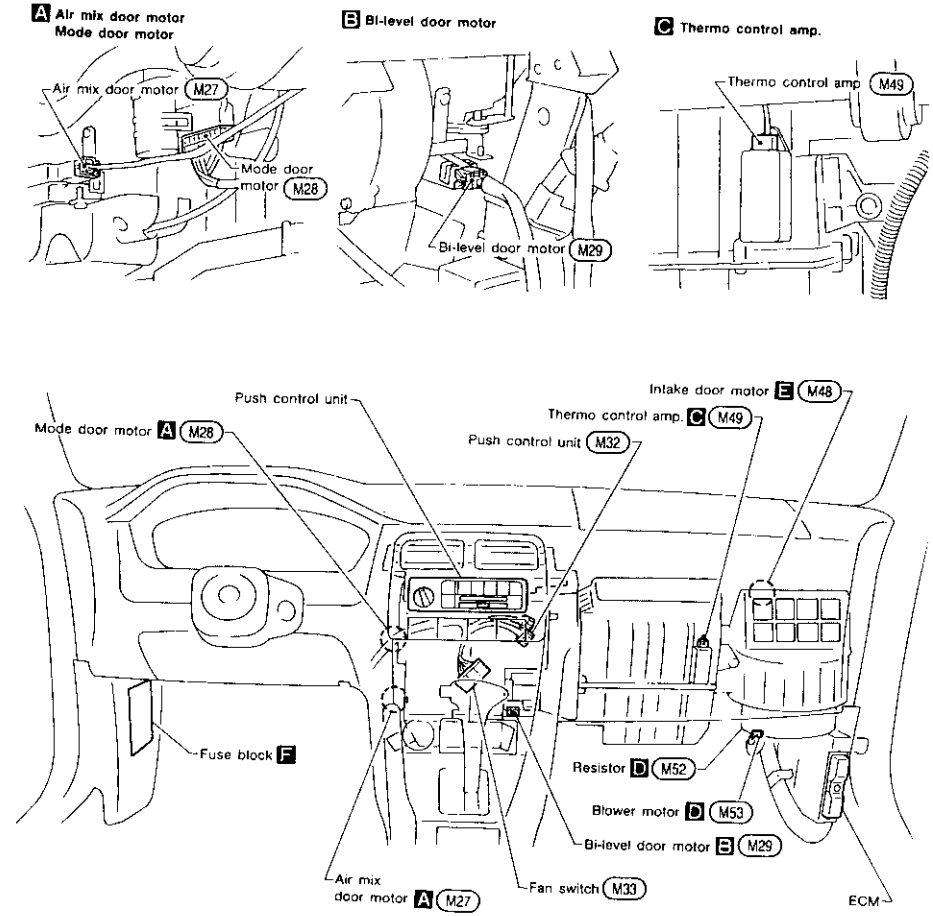

SHA507E

Harness Layout (Cont'd)

RHD model

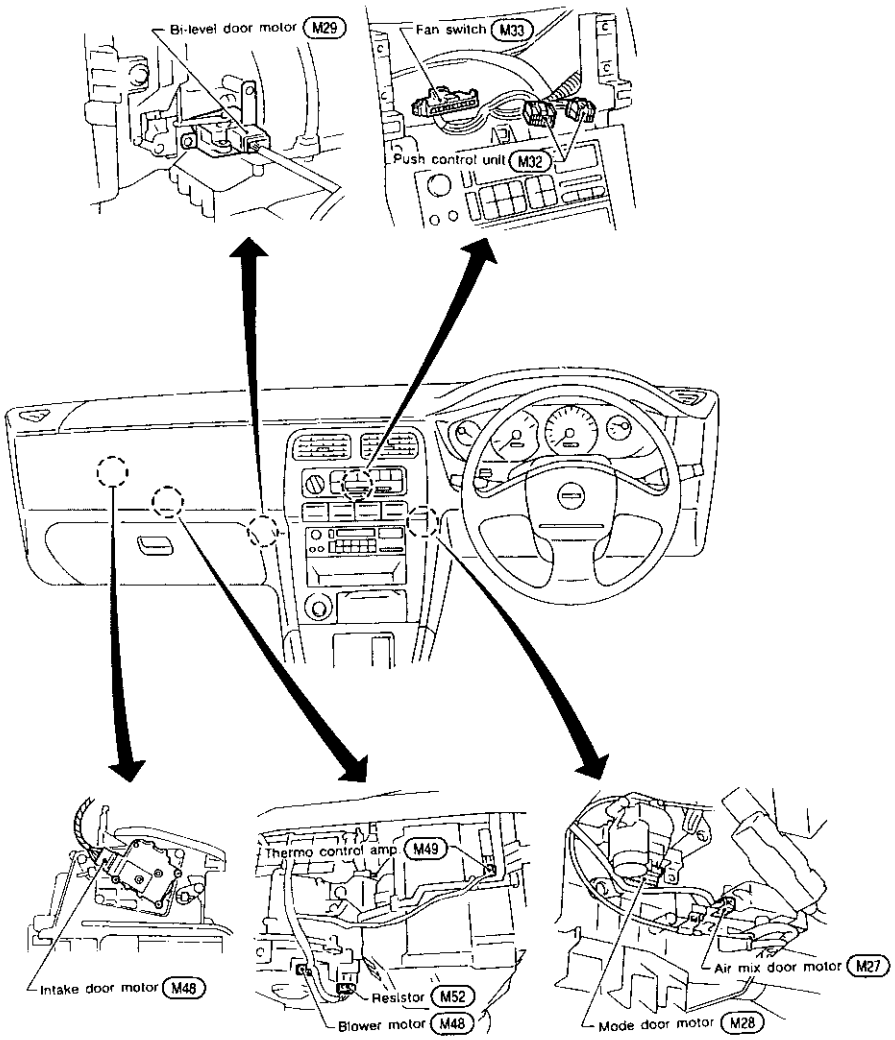

SHA527E

Circuit Diagram — Heater

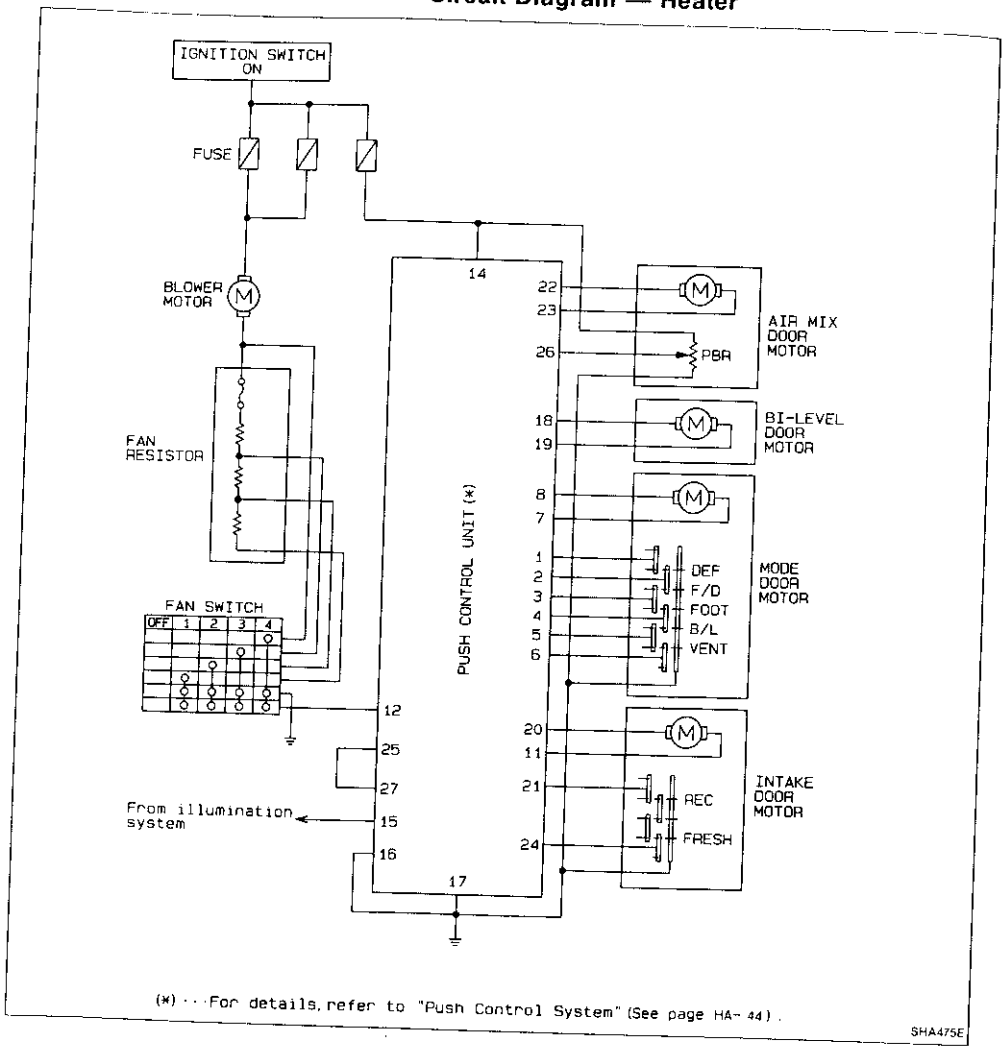

(*) ···For details, refer to "Push Control System" (See page HA-44).

Wiring Diagram — HEAT —

LHD MODEL

HA-HEAT-01

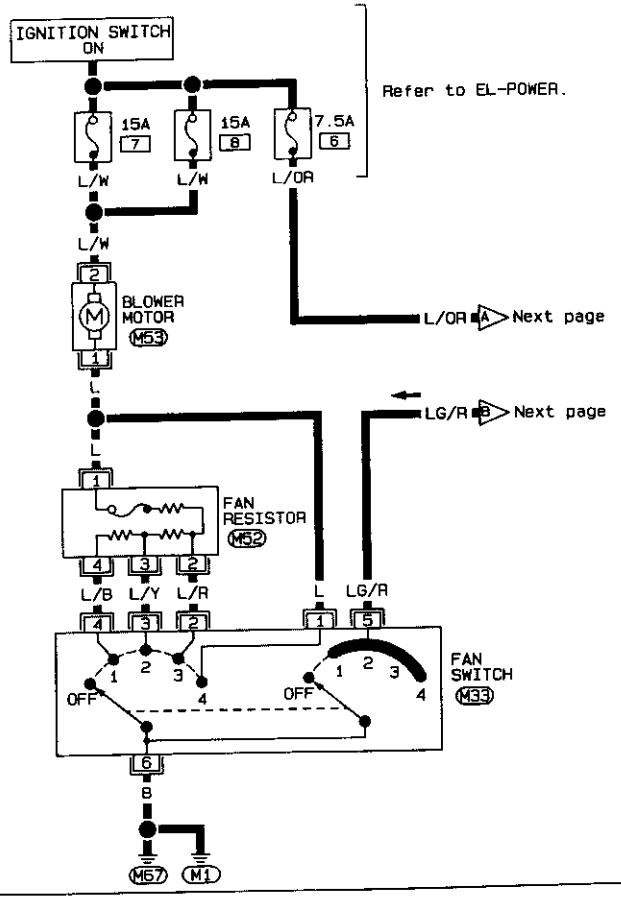

SHA476E

HA-HEAT-02

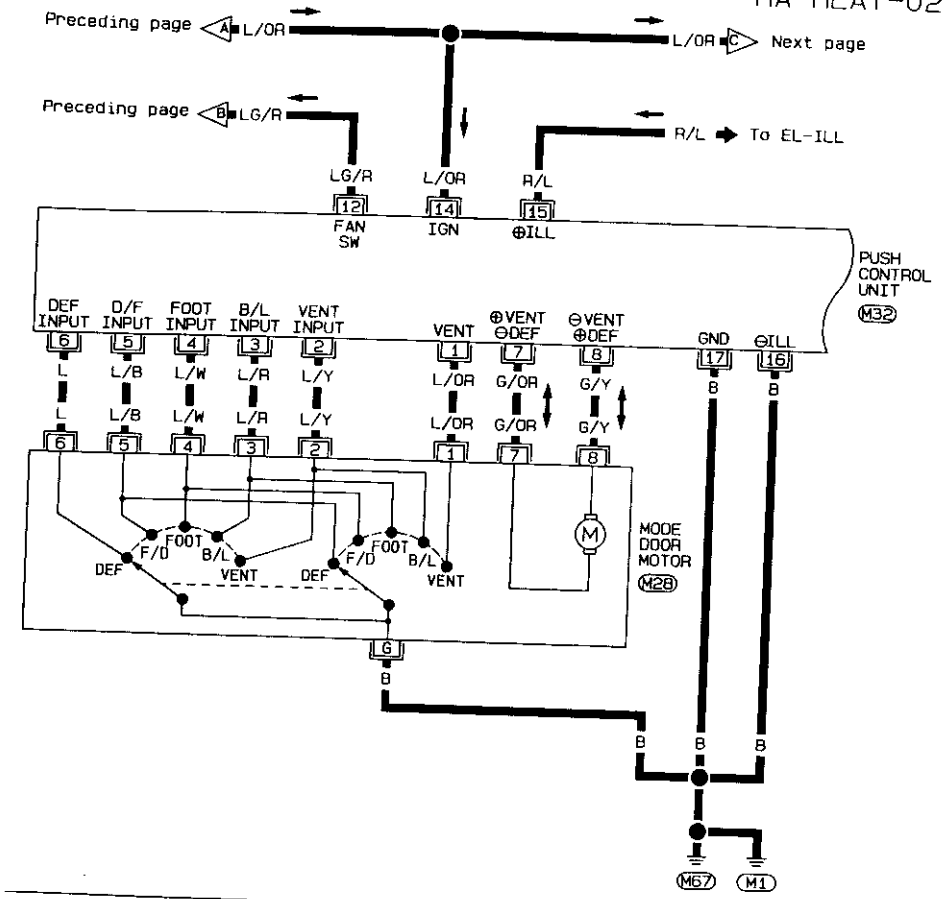

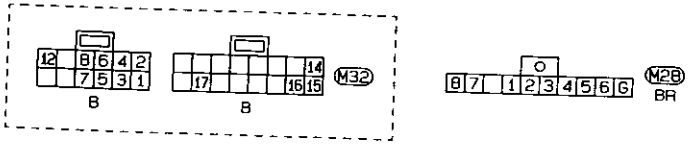

SHA477E

HA-HEAT-03

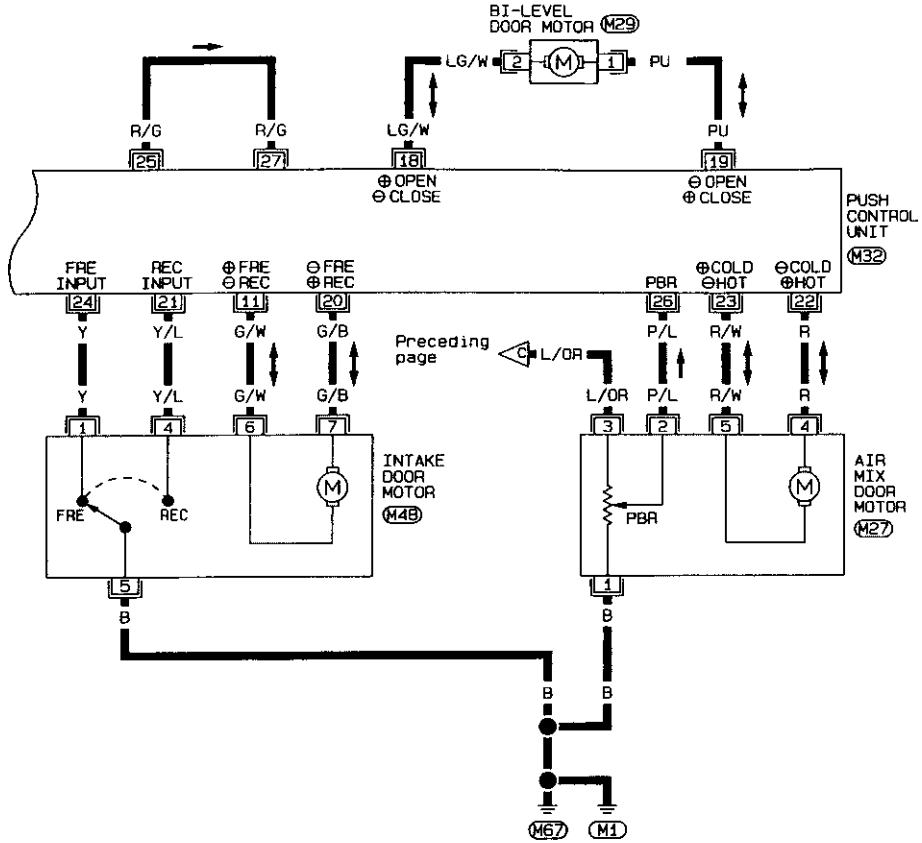

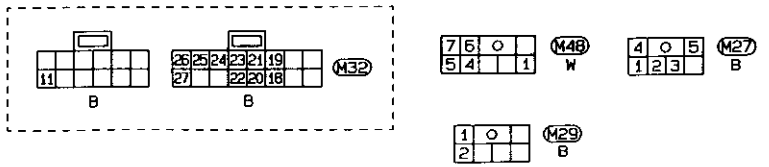

SHA478E

Wiring Diagram — HEAT — (Cont'd)

RHD MODEL

HA-HEAT-04

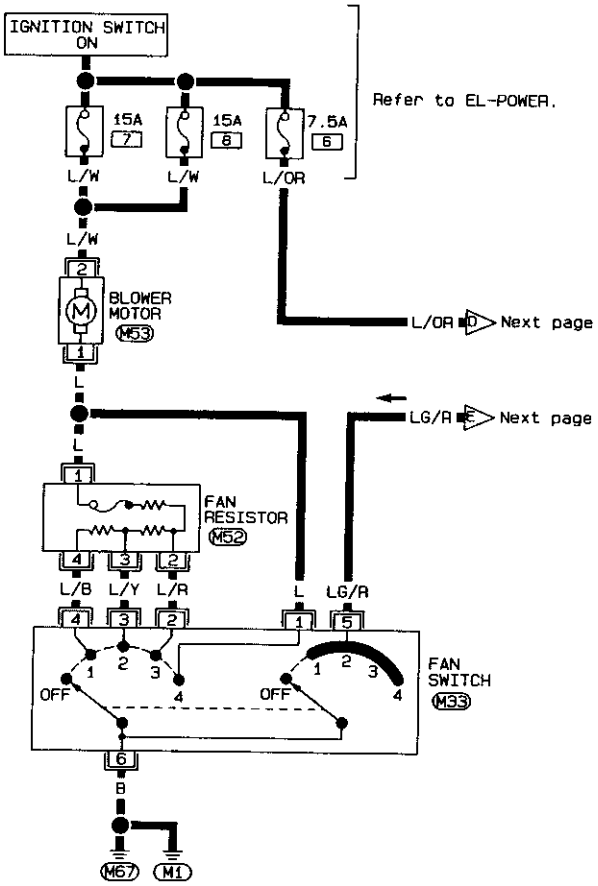

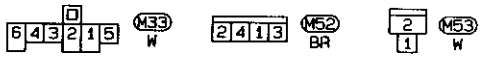

SHA479E

Wiring Diagram — HEAT — (Cont'd)

HA-HEAT-05

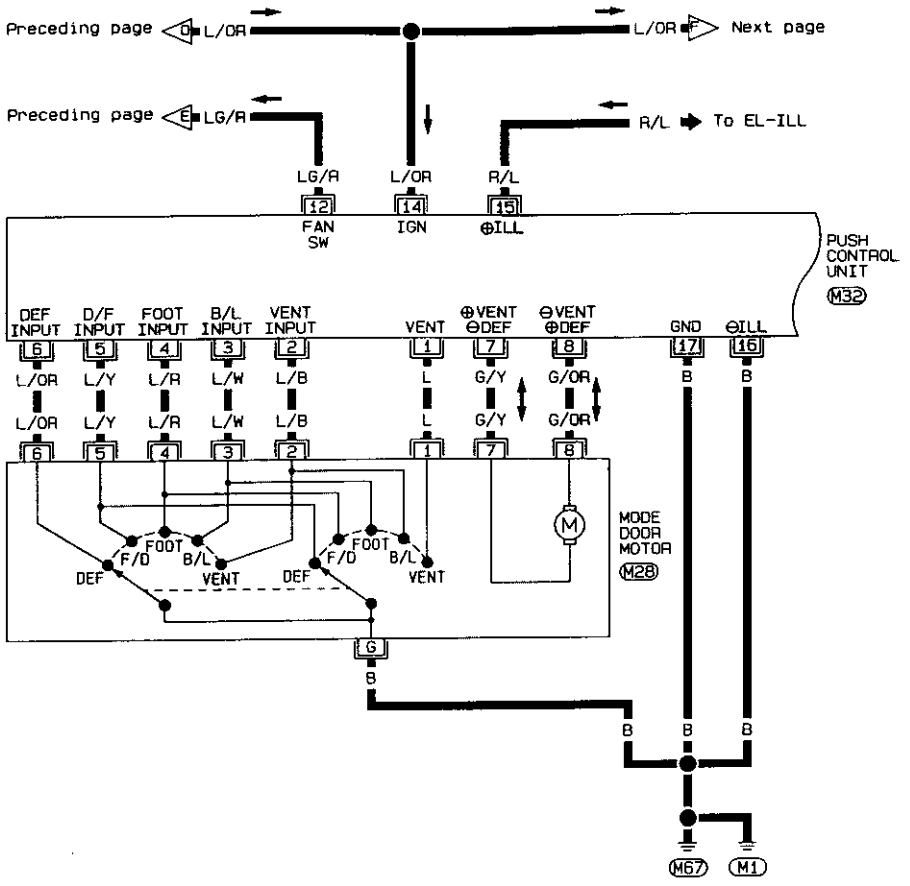

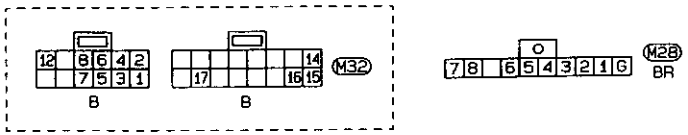

SHA480F

Wiring Diagram — HEAT — (Cont'd)

HA-HEAT-06

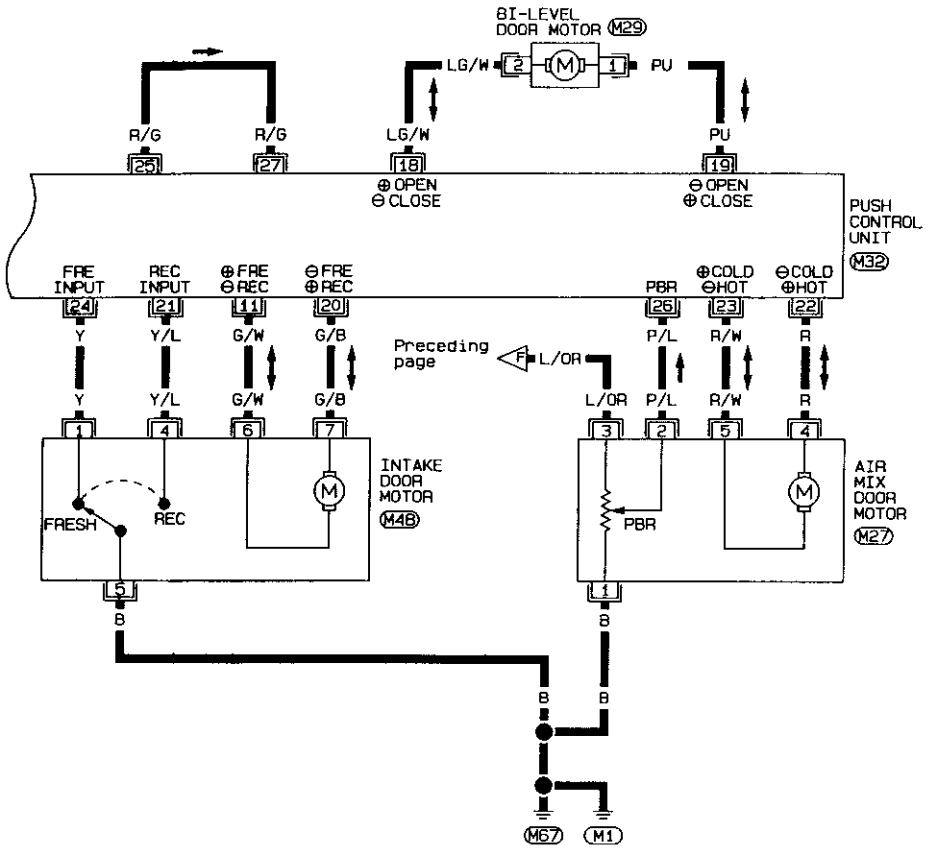

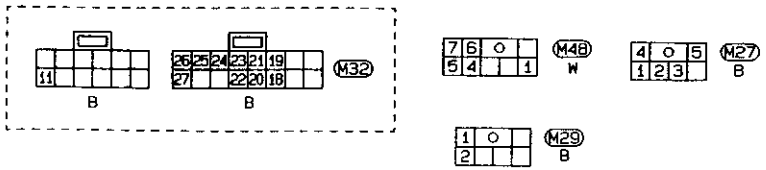

SHA481E

Circuit Diagram — Manual Air Conditioner

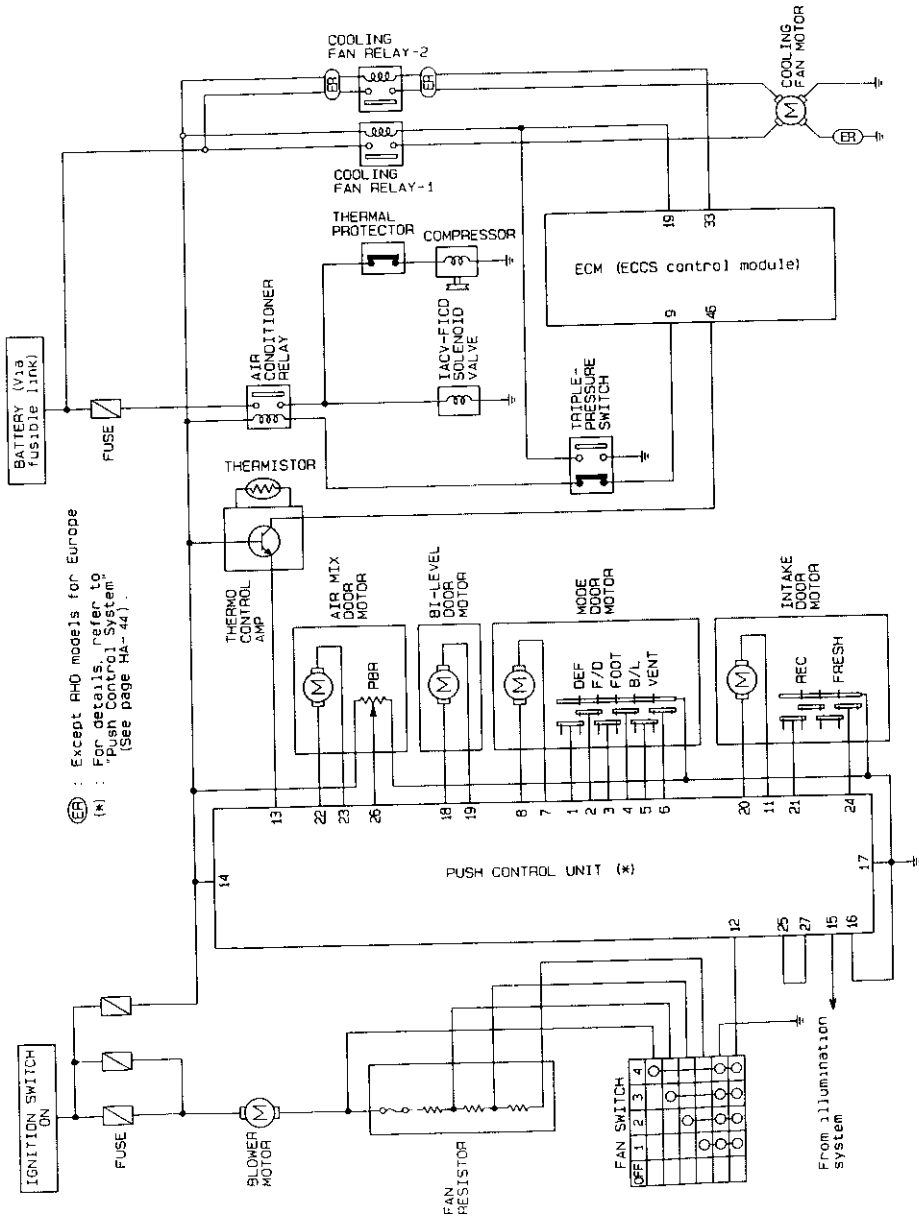

SHA456E

Circuit Diagram — Push Control Unit

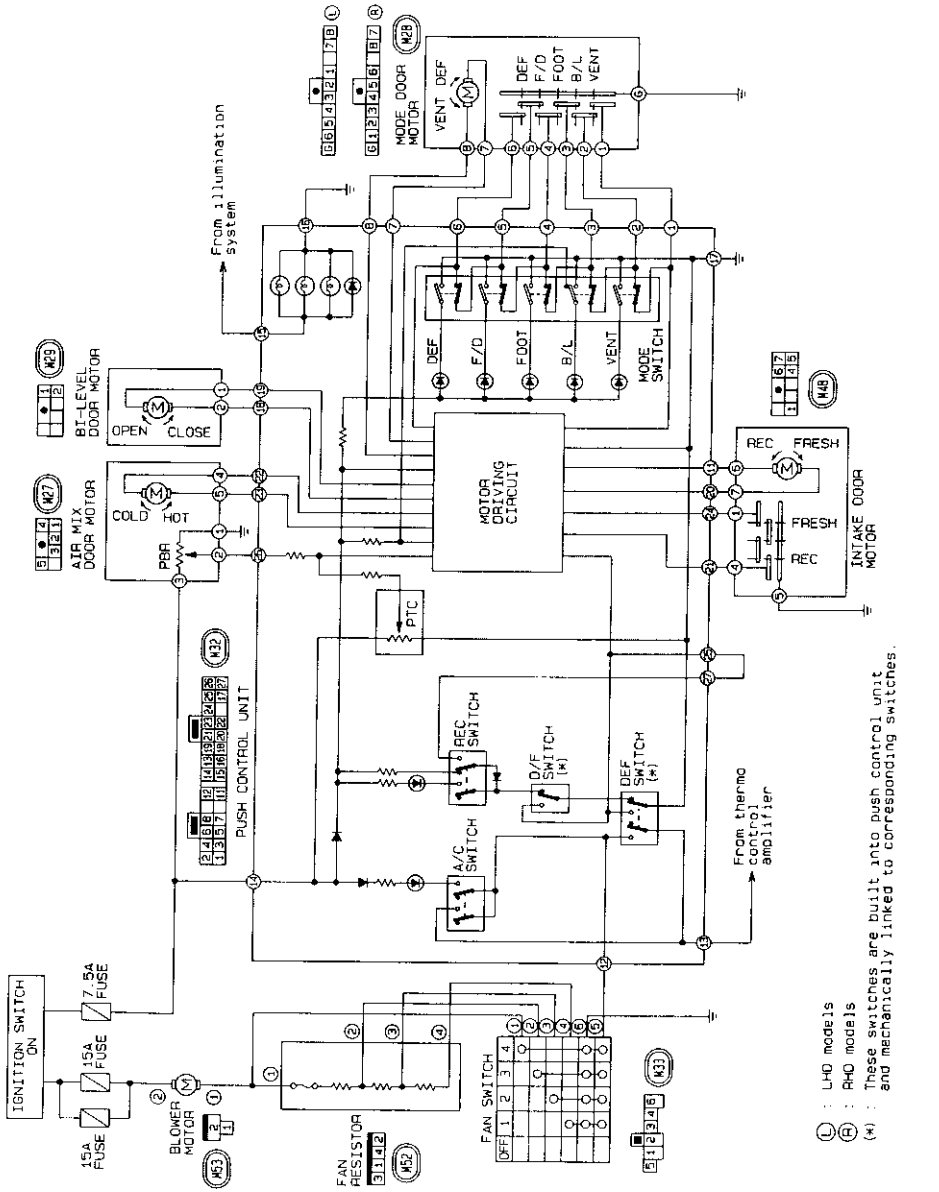

SHA474E

Wiring Diagram — A/C, M —

LHD MODEL

HA-A/C, M-01

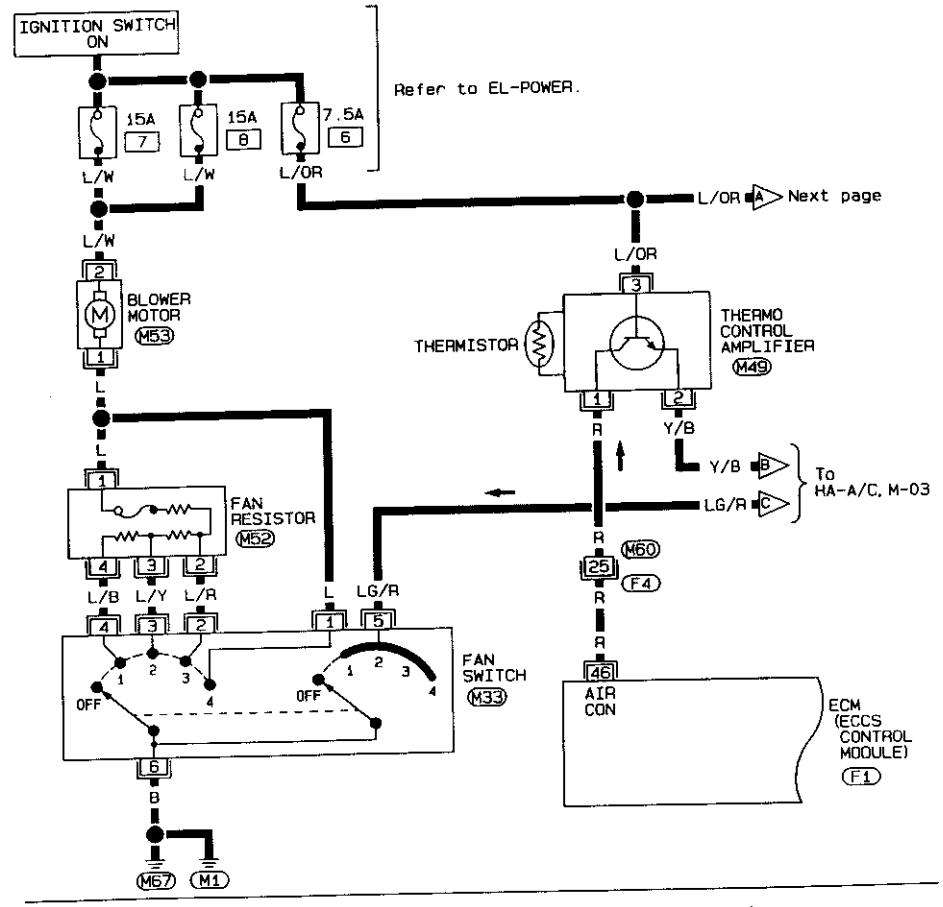

SHA457E

Wiring Diagram — A/C, M — (Cont'd)

HA-A/C, M-02

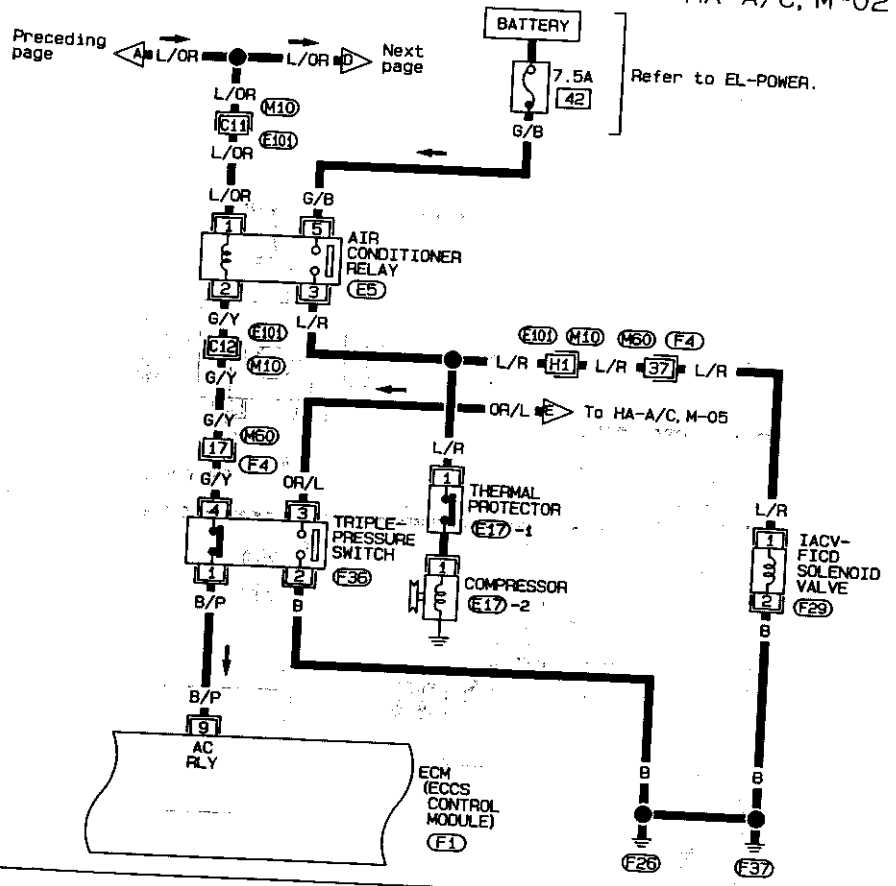

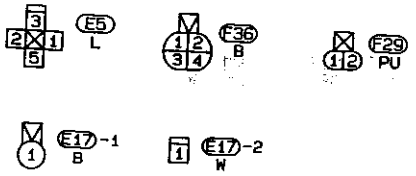

Refer to last page (Foldout page).

M10, E101
M60, F4
F1

SHA458E

Wiring Diagram — A/C, M — (Cont'd)

HA-A/C, M-03

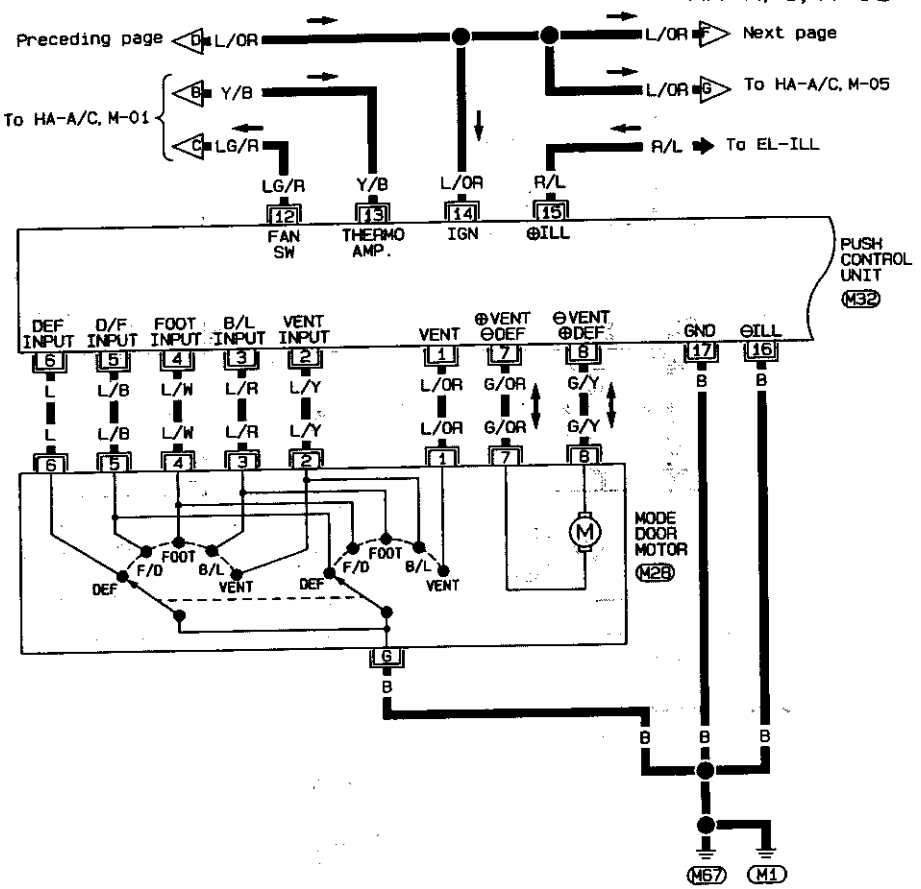

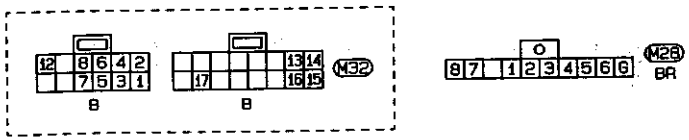

SHA459E

HA-A/C, M-04

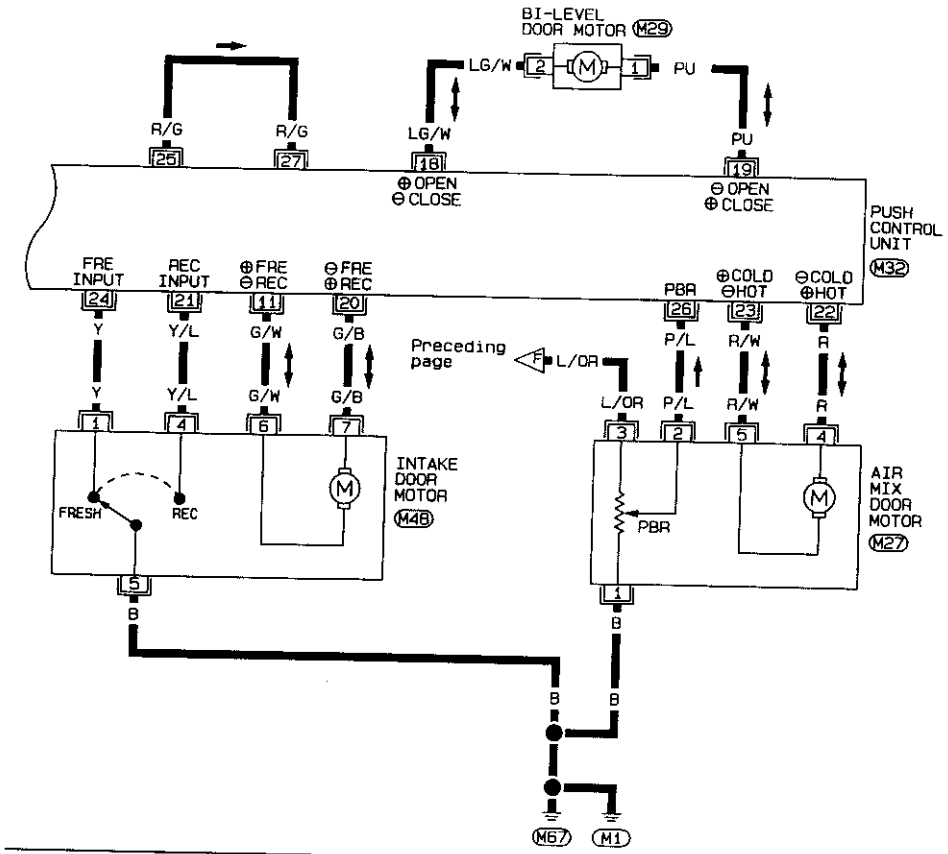

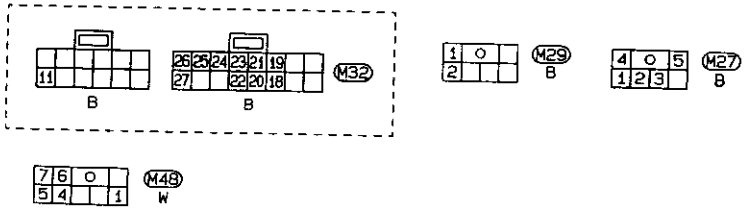

SHA460E

HA-A/C, M-05

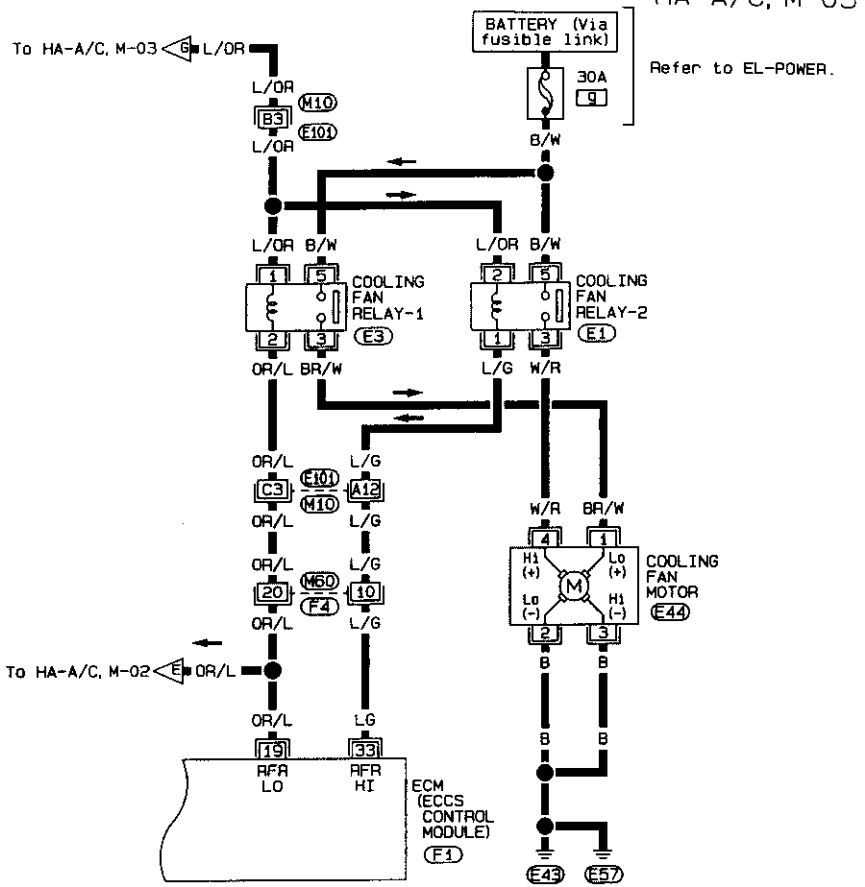

Refer to last page (Foldout page)

M10, E101
M60, F4
F1

SHA461E

Wiring Diagram — A/C, M — (Cont'd)

RHD MODEL

HA-A/C, M-06

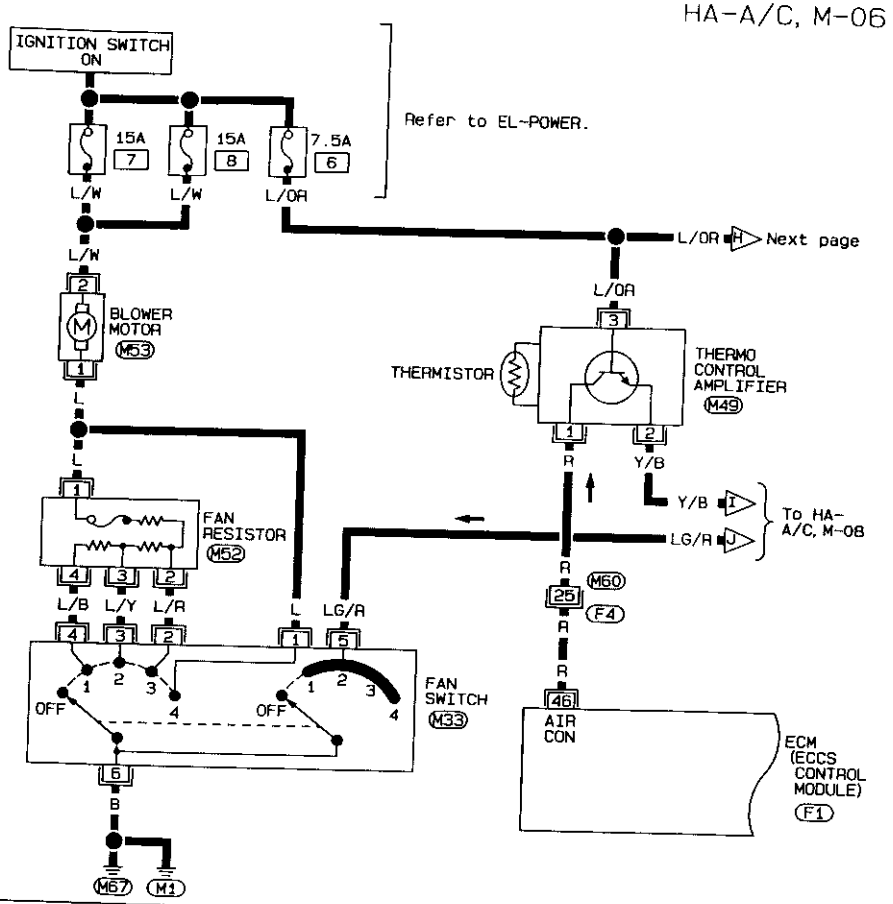

Refer to last page (Foldout page).

M60, F4
F1

SHA462E

Wiring Diagram — A/C, M — (Cont'd)

HA-A/C, M-07

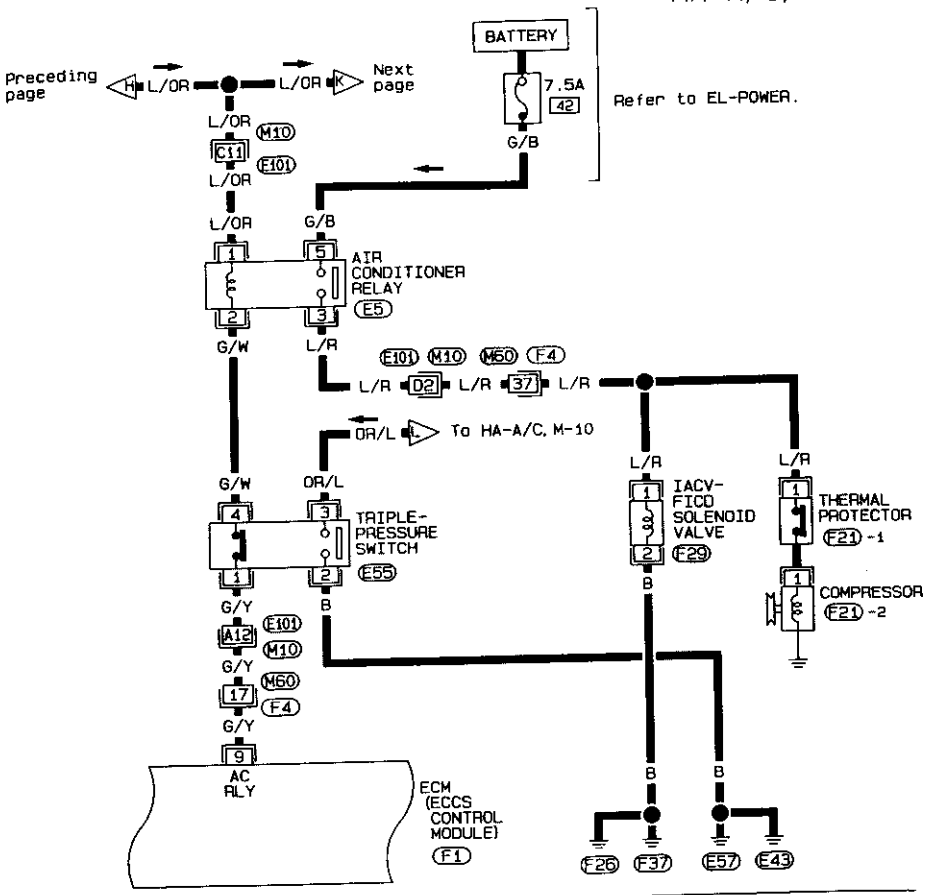

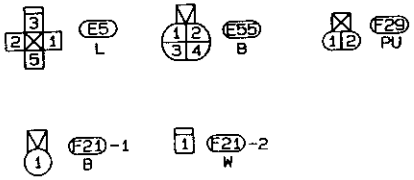

Refer to last page (Foldout page).

M10, E101
M60, F4
F1

SHA463E

Wiring Diagram — A/C, M — (Cont'd)

HA-A/C, M-08

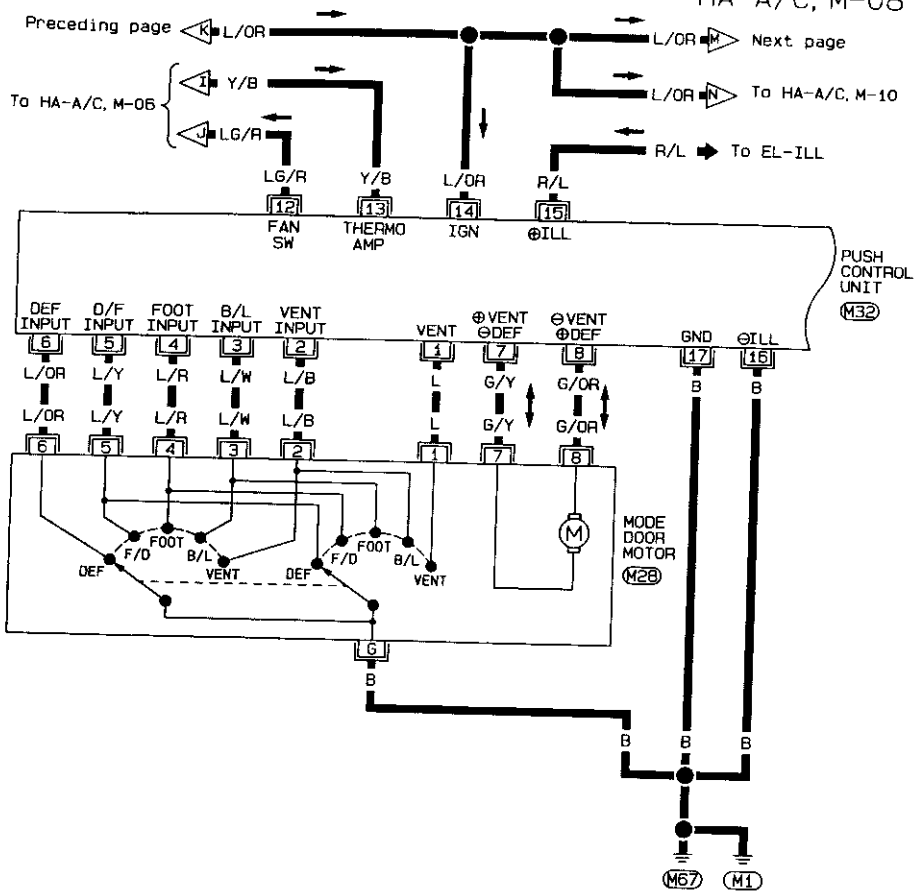

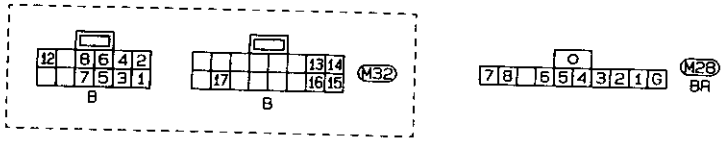

SHA464E

Wiring Diagram — A/C, M — (Cont'd)

HA-A/C, M-09

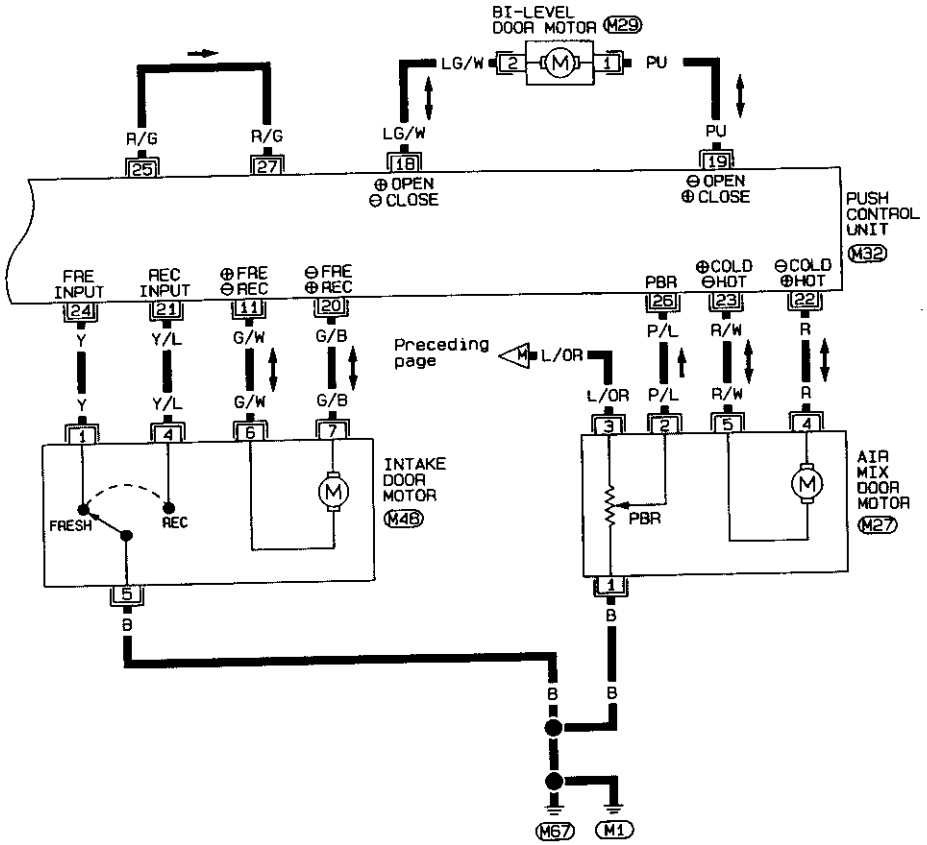

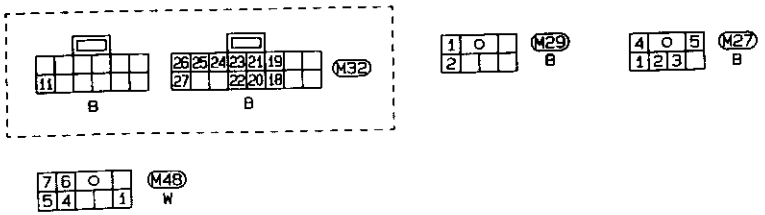

SHA465E

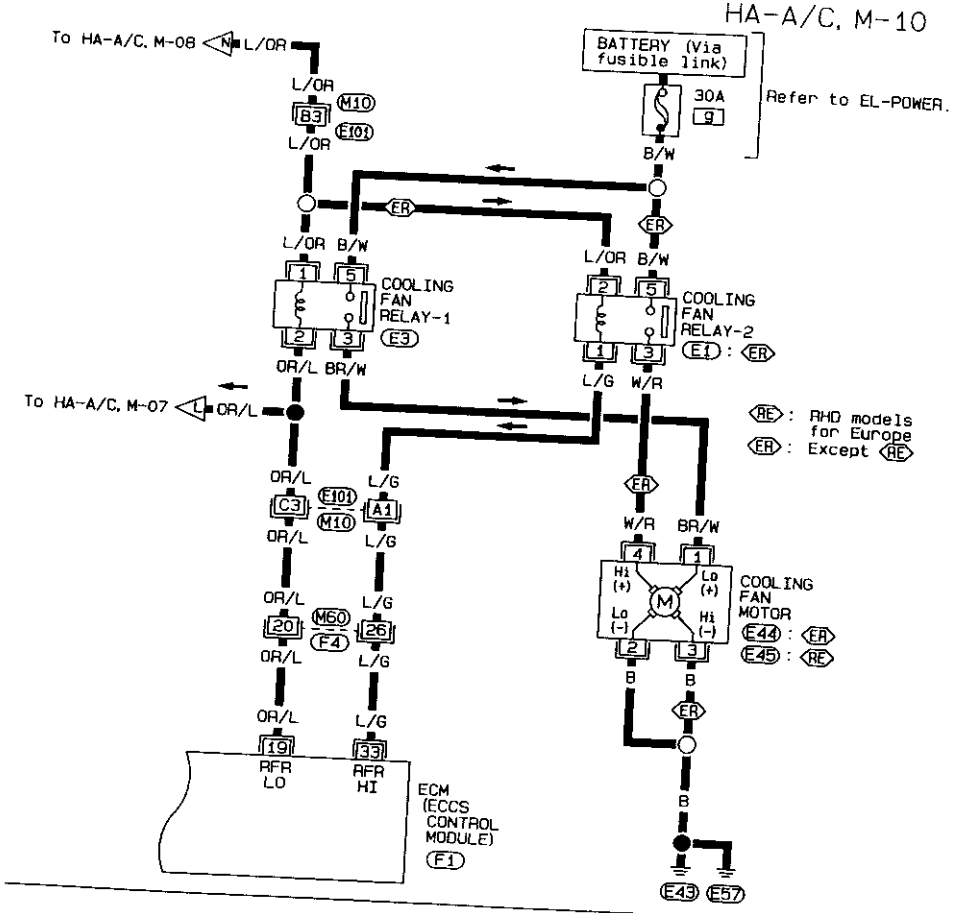

SHA466E

Main Power Supply and Ground Circuit Check

POWER SUPPLY CIRCUIT CHECK

Check power supply circuit for air conditioning system.
Refer to EL section ("Wiring Diagram", "POWER SUPPLY ROUTING").

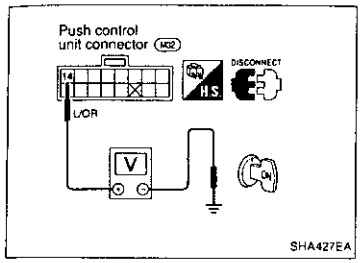

SHA427EA

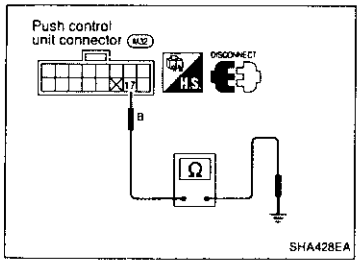

SHA428EA

PUSH CONTROL UNIT CHECK

Check power supply circuit for push control unit with ignition switch at ON.

1. Disconnect push control unit harness connector.
2. Connect voltmeter from harness side.
3. Measure voltage across terminal No. ⑭ and body ground.

Voltmeter terminal		Voltage
⊕	⊖	
⑭	Body ground	Approx. 12V

Check body ground circuit for push control unit.

1. Disconnect push control unit harness connector.
2. Connect ohmmeter from harness side.
3. Check for continuity between terminal No. ⑰ and body ground.

Ohmmeter terminal		Continuity
⊕	⊖	
⑰	Body ground	Yes

	INCIDENT	Flow chart No.
1	Fan fails to rotate.	1
2	Fan does not rotate at 1-speed.	2
3	Fan does not rotate at 2-speed.	3
4	Fan does not rotate at 3-speed.	4
5	Fan does not rotate at 4-speed.	5

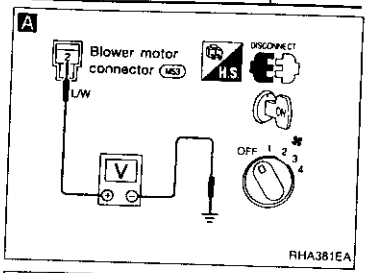

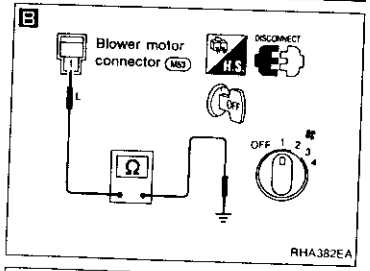

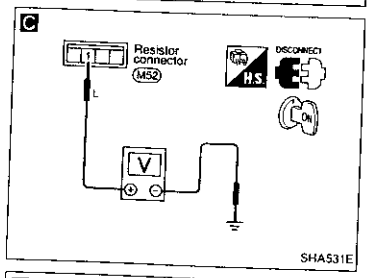

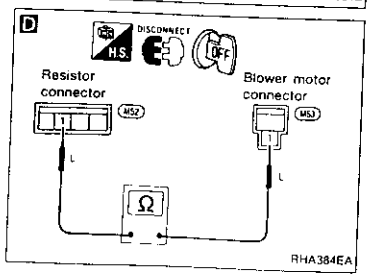

Diagnostic Procedure 1

SYMPTOM: Blower motor does not rotate.

- **Perform PRELIMINARY CHECK 2 before referring to the following flow chart.**

Check if blower motor rotates properly at each fan speed.
Conduct check as per flow chart at left.

2 3 4 5 (Go to next page.)

1

A CHECK POWER SUPPLY FOR BLOWER MOTOR.
Disconnect blower motor harness connector.
Do approx. 12 volts exist between blower motor harness terminal No. ② and body ground?

No → Check 15A fuses at fuse block.
Refer to EL section ("Wiring Diagram", "POWER SUPPLY ROUTING").

Yes

B Check circuit continuity between blower motor harness terminal No. ① and body ground.

OK → CHECK BLOWER MOTOR. (Refer to HA-68.)

NG → Reconnect blower motor harness connector.
Disconnect resistor harness connector.

NG → Replace blower motor

C CHECK BLOWER MOTOR CIRCUIT BETWEEN BLOWER MOTOR AND RESISTOR.
Do approx. 12 volts exist between resistor harness terminal No. ① and body ground?

No → Disconnect blower motor harness connectors.

D Note
Check circuit continuity between blower motor harness terminal No. ① and resistor harness terminal No. ①.

Yes

Ⓐ (Go to next page.)

Note:
If the result is NG after checking circuit continuity, repair harness or connector.

Diagnostic Procedure 1 (Cont'd)

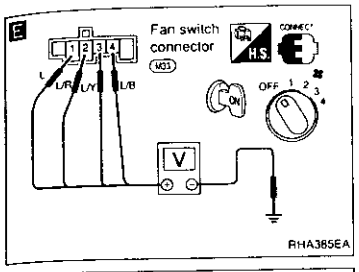

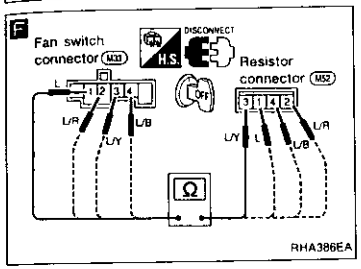

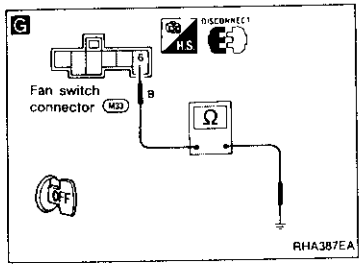

Ⓐ 1 → CHECK RESISTOR AFTER DISCONNECTING IT (Refer to HA-68.)

OK → Reconnect resistor harness connector.

NG → Replace resistor

1 → **E** CHECK FAN SWITCH CIRCUIT.
Do approx. 12 volts exist between each fan switch harness terminal and body ground?

Flow chart No	Terminal No. ⊕	Terminal No. ⊖	Voltage
2	④	Body ground	Approx. 12V
3	③		
4	②		
5	①		

Yes → 2 3 4 5

No → **F** Note: Check circuit continuity between fan switch and resistor.

CHECK FAN SWITCH AFTER DISCONNECTING IT. (Refer to HA-68.)

NG → Replace fan switch.

OK → **G** Note: Check circuit continuity between fan switch harness terminal No. ⑥ and body ground.

OK → Replace blower motor

Note:
If the result is NG after checking circuit continuity, repair harness or connector.

A LHD model

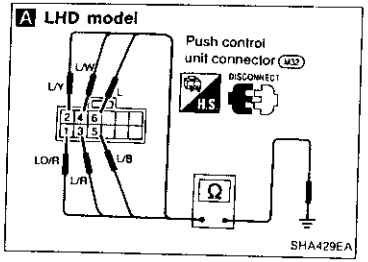

A RHD model

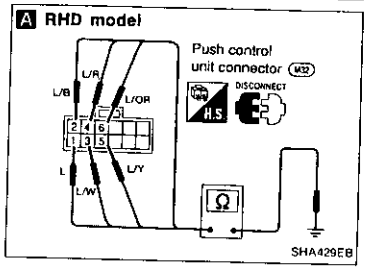

B Mode door motor connector

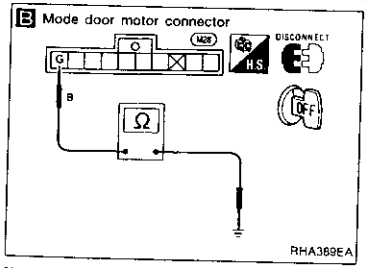

C LHD model

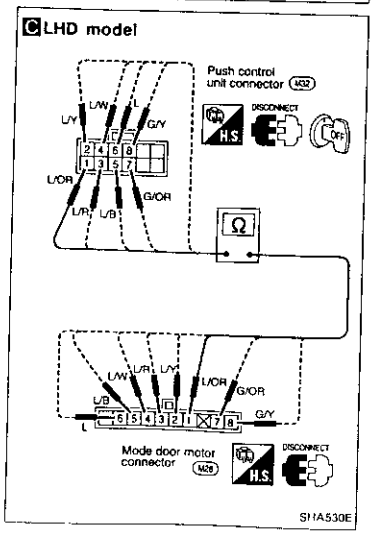

Diagnostic Procedure 2

SYMPTOM: Air outlet does not change.

- **Perform PRELIMINARY CHECK 4, then Main Power Supply and Ground Circuit Check before referring to the flow chart below.**

A

CHECK MODE DOOR MOTOR POSITION SWITCH.

1. Turn VENT switch ON with ignition switch at ON position.
2. Turn ignition switch OFF. Disconnect push control unit connector.
3. Check for continuity between terminal ① or ② of push control unit harness connector and body ground.
4. Using above procedures, check for continuity in any other mode, as indicated in chart.

Mode switch	Terminal No. ⊕	Terminal No. ⊖	Continuity
VENT	① or ②	Body ground	Yes
B/L	② or ③		
FOOT	③ or ④		
F/D	④ or ⑤		
DEF	⑤ or ⑥		

NG → Disconnect mode door motor harness connector.

OK → CHECK SIDE LINK. Refer to Control Linkage Adjustment (HA-70)

B Note

CHECK BODY GROUND CIRCUIT FOR MODE DOOR MOTOR. Does continuity exist between mode door motor harness terminal No. ⑥ and body ground?

Yes

C Note

Check circuit continuity between each terminal on push control unit and on mode door motor.

Terminal No. ⊕ (Push control unit)	Terminal No. ⊖ (Mode door motor)	Continuity
①	①	Yes
②	②	
③	③	
④	④	
⑤	⑤	
⑥	⑥	
⑦	⑦	
⑧	⑧	

OK → Ⓐ (Go to next page)

Note:
If the result is NG after checking circuit continuity, repair harness or connector.

Diagnostic Procedure 2 (Cont'd)

C RHD model

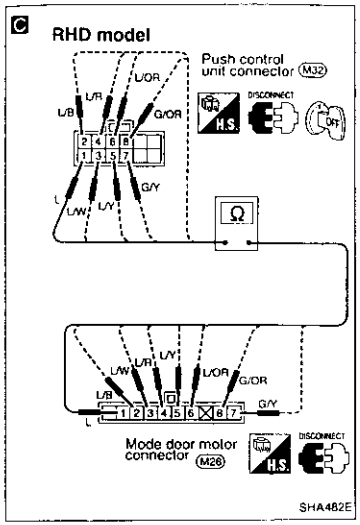

D

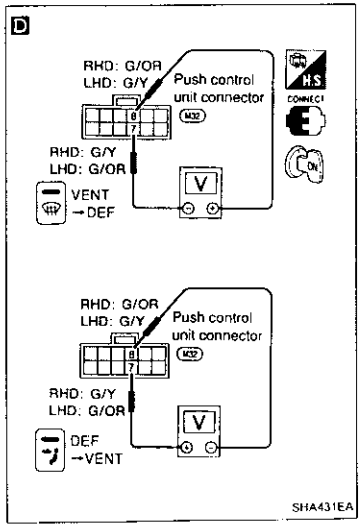

Ⓐ

Reconnect push control unit and mode door motor harness connectors.

D

CHECK FOR OUTPUT OF PUSH CONTROL UNIT.
Change the mode from VENT to DEF, or from DEF to VENT. Do approx. 12 volts exist between push control unit harness terminals ⑦ and ⑧ in both cases?

No → Replace push control unit.

Terminal No. ⑦	Terminal No. ⑧	Mode switch operation	Voltage
Each side		Stop	0V
⊖	⊕	VENT → DEF	Approx. 12V
⊕	⊖	DEF → VENT	

Yes → Replace mode door motor.

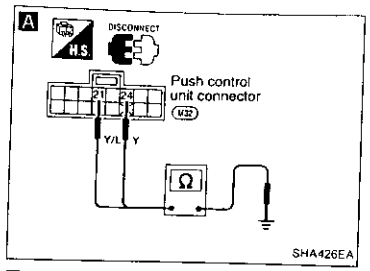

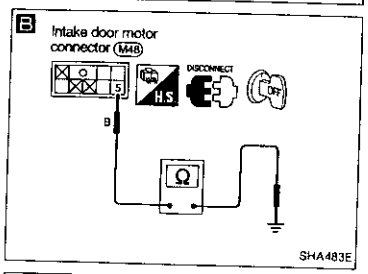

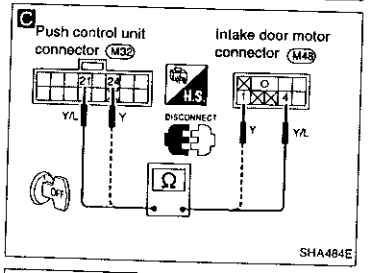

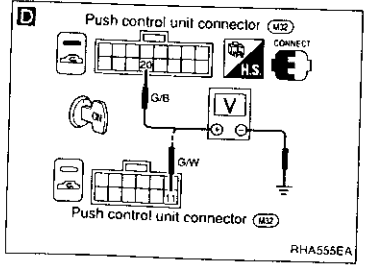

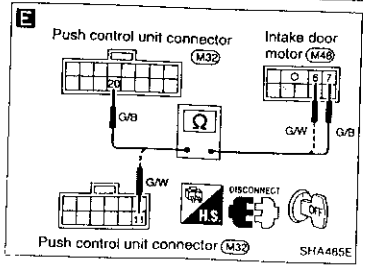

Diagnostic Procedure 3

SYMPTOM: Intake door does not change in VENT, B/L or FOOT mode.

- **Perform PRELIMINARY CHECK 1, then Main Power Supply and Ground Circuit Check before referring to the flow chart below.**

A

CHECK INTAKE DOOR MOTOR POSITION SWITCH.
1. Turn REC switch ON with ignition switch at ON position.
2. Turn ignition switch OFF. Disconnect push control unit connector.
3. Check for continuity between terminal ㉑ of push control unit harness connector and body ground.
4. Using above procedures, check for REC switch OFF position as indicated in chart.

REC switch	Terminal No. ⊕	Terminal No. ⊖	Continuity
ON	㉑	Body ground	Yes
OFF	㉔		

NG → Disconnect intake door motor harness connector

OK → CHECK INTAKE DOOR LINK. Refer to HA-71.

B Note

CHECK BODY GROUND CIRCUIT FOR INTAKE DOOR MOTOR. Does continuity exist between intake door motor harness terminal No. ⑤ and body ground?

Yes

C Note

Check continuity between push control unit harness terminal ㉑ (㉔) and intake door motor harness terminal ④ (①).

OK → Reconnect push control unit and intake door motor harness connector.

D

CHECK FOR OUTPUT OF PUSH CONTROL UNIT. Turn REC switch ON or OFF. Do approx. 12 volts exist between push control unit harness connector terminals ⑳ or ⑪ and body ground?

REC Switch	Terminal No. ⊕	Terminal No. ⊖	Voltage
ON	⑳	Body ground	Approx. 12V
OFF	⑪		

No → Replace push control unit.

E Note

Check for continuity between push control unit harness connector terminal ⑳ (⑪) and intake door motor harness terminal ⑦ (⑥).

Yes

OK → Replace intake door motor.

Note:
If the result is NG after checking circuit continuity, repair harness or connector.

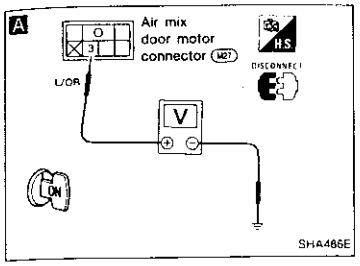

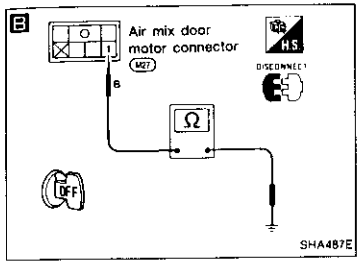

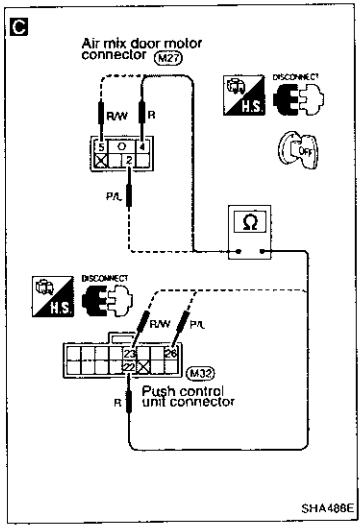

Diagnostic Procedure 4

SYMPTOM: Air mix door does not change.
Perform PRELIMINARY CHECK 2, then Main Power Supply and Ground Circuit Check before referring to the flow chart below.

A

CHECK POWER SUPPLY FOR AIR MIX DOOR MOTOR.
Disconnect air mix door motor harness connector.
Do approx. 12V exist between air mix door motor harness terminal No. ③ and body ground?

No → Check power supply circuit and 7.5A fuse at fuse block. Refer to EL section ("Wiring Diagram", "POWER SUPPLY ROUTING").

Yes

B Note

Check circuit continuity between air mix door motor harness terminal No. ① and body ground.

OK → Disconnect push control unit harness connector.

C Note

Check circuit continuity between each terminal on push control unit and air mix door motor.

Terminal No. ⊕	Terminal No. ⊖	Continuity
Push control unit	Air mix door motor	
㉒	④	Yes
㉓	⑤	
㉖	②	

OK → Reconnect push control unit harness connector and air mix door motor harness connector.

Ⓐ

(Go to next page.)

Note:
If the result is NG after checking circuit continuity, repair harness or connector.

Diagnostic Procedure 4 (Cont'd)

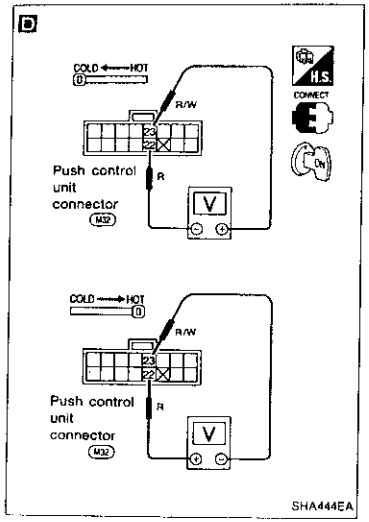

Ⓐ

D

CHECK FOR PUSH CONTROL UNIT OUTPUT.
Slide the temperature control lever from HOT to COLD and COLD to HOT.
Do approx. 12 volts exist between push control unit harness terminals ㉒ and ㉓ in both cases?

No → Replace push control unit.

Terminal No.		Temp. control lever operation	Voltage
㉒	㉓		
⊖	⊕	HOT → COLD	Approx 12V
⊕	⊖	COLD → HOT	
Each side		STOP	Approx 0V

Yes

CHECK FOR PBR RESISTANCE IN AIR MIX DOOR MOTOR.
Refer to HA-70.

NG → Replace air mix door motor.

OK

CHECK AIR MIX DOOR LINK.
(Refer to HA-71.)

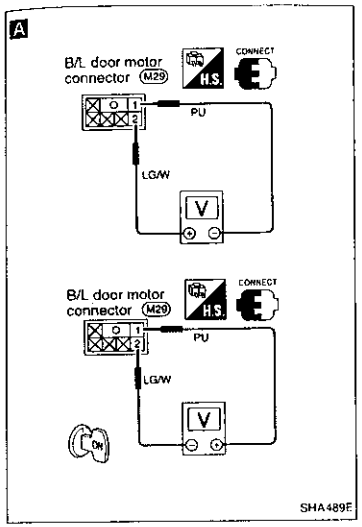

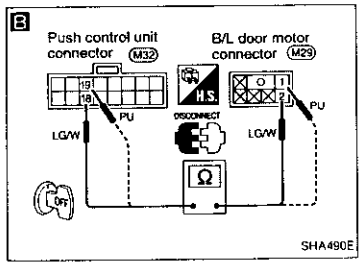

Diagnostic Procedure 5

SYMPTOM: Bi-level (B/L) door does not operate.

A

CHECK POWER SUPPLY FOR B/L DOOR MOTOR.
Turn B/L switch ON and OFF.
Do approx. 12 volts exist between B/L door motor harness terminals ① and ② in both cases?

No → Disconnect push control unit connector.

Terminal No.		B/L switch	B/L door operation	Voltage
②	①			
⊕	⊖	ON	Open	Approx 12V
⊖	⊕	OFF	Close	

B

Note
Check circuit continuity between B/L door motor harness terminal No. ② (①) and push control unit harness terminal No. ⑱ (⑲).

OK → Replace push control unit.

Yes

CHECK B/L DOOR LINK. Refer to HA-71.

Note:
If the result is NG after checking circuit continuity, repair harness or connector.

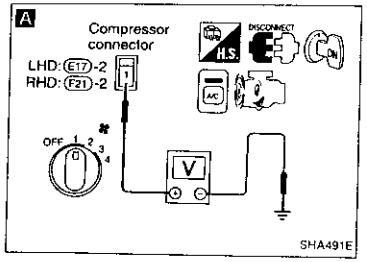

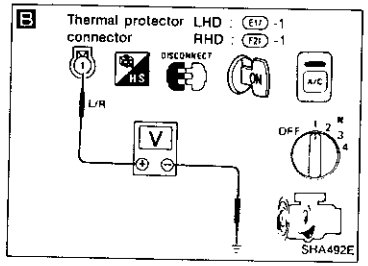

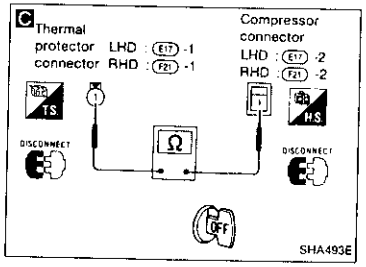

Diagnostic Procedure 6

SYMPTOM: Magnet clutch does not operate when A/C switch and fan switch are ON.

- **Perform PRELIMINARY CHECK 2 before referring to the following flow chart.**

A

CHECK POWER SUPPLY FOR COMPRESSOR.
Disconnect compressor harness connector.
Do approx. 12 volts exist between compressor harness terminal No. ① and body ground?

No → **B**

Yes → Check magnet clutch coil.

OK → Replace magnet clutch.
Refer to COMPRESSOR. (HA-146)

B

CHECK POWER SUPPLY FOR THERMAL PROTECTOR.
Disconnect thermal protector harness connector.
Do approx. 12V exist between thermal protector harness terminal No. ① and body ground?

No → Ⓐ (Go to next page.)

Yes → **C**

C

CHECK THERMAL PROTECTOR.
Check circuit continuity between thermal protector harness terminal No. ① and compressor harness terminal No. ①.

NG → Replace thermal protector.

Diagnostic Procedure 6 (Cont'd)

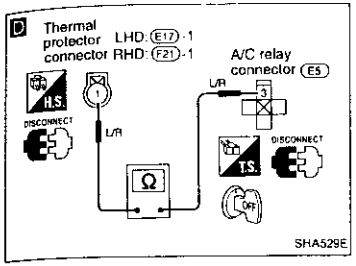

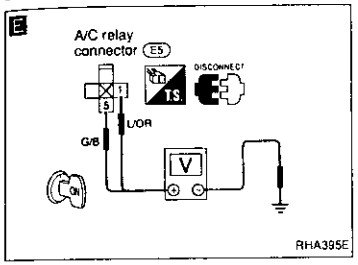

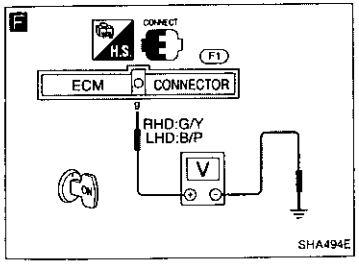

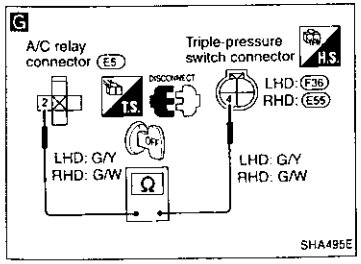

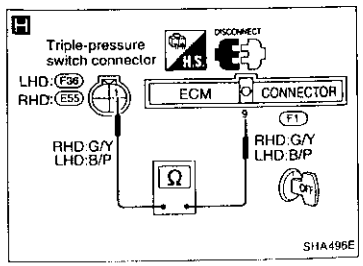

Ⓐ

Disconnect A/C relay harness connector.

D

Check circuit continuity between A/C relay harness terminal No. ③ and thermal protector harness terminal No. ①.

Note

OK → **E**

E

CHECK POWER SUPPLY FOR A/C RELAY.
Disconnect A/C relay.
Do approx. 12 volts exist between A/C relay harness terminal No. ①, ⑤ and body ground?

No → CHECK POWER SUPPLY CIRCUIT AND 7.5A FUSES AT FUSE BLOCK (Refer to "POWER SUPPLY ROUTING" in EL section and Wiring Diagram.)

Yes → CHECK A/C RELAY AFTER DISCONNECTING IT.
(Refer to Electrical Components Inspection.) (HA-70)

NG → Replace A/C relay.

OK → Reconnect A/C relay.

F

CHECK COIL SIDE CIRCUIT OF A/C RELAY.
Do approx. 12 volts exist between ECM (ECCS control module) harness terminal No. ⑨ and body ground?

No → **G**

Yes → Ⓑ (Go to next page.)

G

Check circuit continuity between A/C relay harness terminal No. ② and triple-pressure switch harness terminal No. ④

Note

OK → **H**

H

Check circuit continuity between triple-pressure switch harness terminal No. ① and ECM (ECCS control module) harness terminal No. ⑨.
[For terminal arrangement, refer to last page (Foldout page).]

Note

OK → CHECK TRIPLE PRESSURE SWITCH.
Refer to HA-69.

Note:
If the result is NG after checking circuit continuity, repair harness or connector.

Diagnostic Procedure 6 (Cont'd)

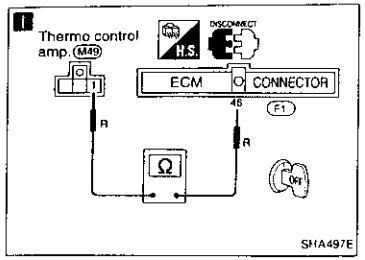

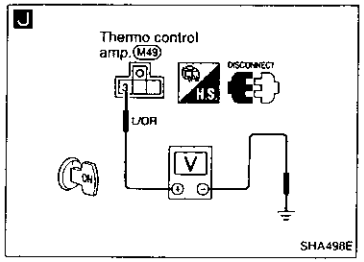

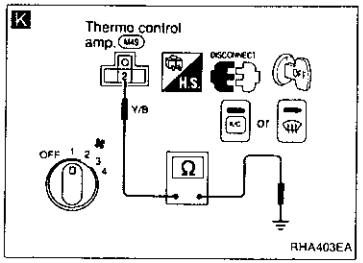

Ⓑ

Disconnect thermo control amp. harness connector.

I — Note

Check circuit continuity between thermo control amp. harness terminal No. ① and ECM (ECCS control module) harness terminal No. ㊻.

OK

J

CHECK POWER SUPPLY FOR THERMO CONTROL AMP.
Disconnect thermo control amp. harness connector.
Do approx. 12 volts exist between thermo control amp. harness terminal No. ③ and body ground?

No → Check 7.5A fuse at fuse block
Refer to EL section ("Wiring Diagram", "POWER SUPPLY ROUTING").

Yes

K

CHECK BODY GROUND CIRCUIT FOR THERMO CONTROL AMP.
Turn A/C switch or DEF switch ON.
Check for continuity between thermo control amp. harness terminal ② and body ground.

NG → Disconnect push control unit harness connector.

Ⓒ
(Go to next page.)

OK

CHECK THERMO CONTROL AMP.
Refer to HA-68.

NG → Replace thermo control amp.

OK

Check voltage between ECM (ECCS control module) harness terminals ⑨, ㊻ and body ground.
Refer to EC section ("ECM Terminals and Reference Valve", "TROUBLE DIAGNOSES — General Description").

Note:
If the result is NG after checking circuit continuity, repair harness or connector.

Diagnostic Procedure 6 (Cont'd)

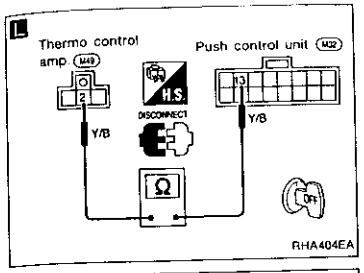

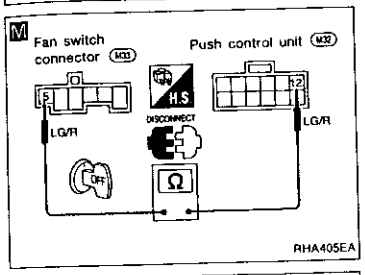

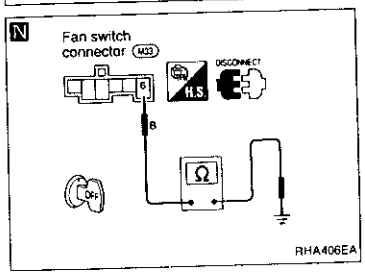

Ⓒ

L — Note

Check circuit continuity between thermo control amp. harness terminal No. ② and push control unit harness terminal No. ⑬.

OK

Disconnect fan switch harness connector.

OK

M — Note

Check circuit continuity between push control unit terminal No. ⑫ and fan switch harness terminal No. ⑤.

OK

N — Note

CHECK BODY GROUND CIRCUIT FOR FAN SWITCH.
Check for continuity between fan switch harness terminal ⑥ and body ground.

OK

CHECK FAN SWITCH.
(Refer to HA-68.)

NG → Replace fan switch.

OK

Replace push control unit.

Note:
If the result is NG after checking circuit continuity, repair harness or connector.

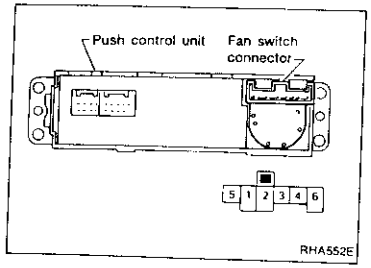

Electrical Components Inspection

FAN SWITCH

Check continuity between terminals at each position.

POSITION	TERMINAL
OFF	
1	④ - ⑤ - ⑥
2	③ - ⑤ - ⑥
3	② - ⑤ - ⑥
4	① - ⑤ - ⑥

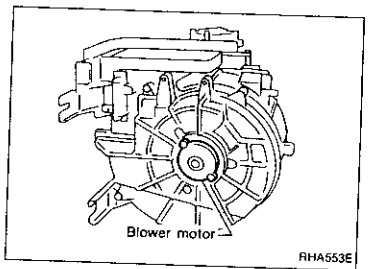

BLOWER MOTOR

Check blower motor for smooth rotation.

- Ensure that there are no foreign particles inside the intake unit.

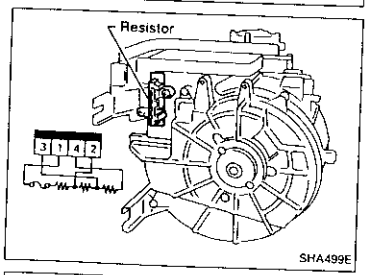

BLOWER RESISTOR

Check continuity between terminals.

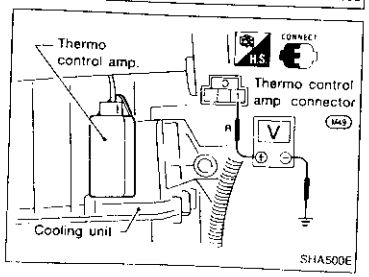

THERMO CONTROL AMP.

1. Run engine, and operate A/C system.
2. Connect the voltmeter from harness side.
3. Check thermo control amp. operation shown in the table.

Evaporator outlet air temperature °C (°F)	Thermo amp operation	Tester
Decreasing to 2.5 - 3.5 (37 - 38)	Turn OFF	Approx. 12V
Increasing to 1 - 2 (34 - 36)	Turn ON	Approx. 0V

Electrical Components Inspection (Cont'd)

TRIPLE-PRESSURE SWITCH

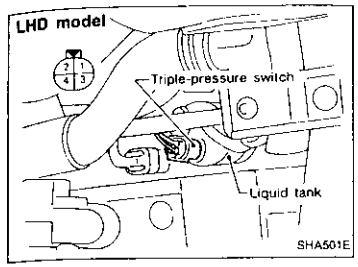

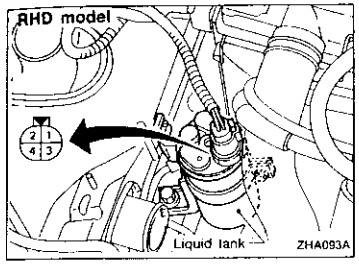

LHD model

	Terminals	High-pressure side line pressure kPa (bar, kg/cm², psi)	Operation	Continuity
Low-pressure side	① - ④	Increasing to 157 - 226 (1.57 - 2.26, 1.6 - 2.3, 23 - 33)	ON	Exist
		Decreasing to 152.0 - 201.0 (1.520 - 2.010, 1.55 - 2.05, 22.0 - 29.2)	OFF	Does not exist
Medium-pressure side*	② - ③	Increasing to 1,422 - 1,618 (14.22 - 16.18, 14.5 - 16.5, 206 - 235)	ON	Exist
		Decreasing to 1,128 - 1,422 (11.28 - 14.22, 11.5 - 14.5, 164 - 206)	OFF	Does not exist
High-pressure side	① - ④	Increasing to 1,667 - 2,059 (16.7 - 20.6, 17 - 21, 242 - 299)	ON	Exist
		Decreasing to 2,452 - 2,844 (24.5 - 28.4, 25 - 29, 356 - 412)	OFF	Does not exist

* For cooling fan motor operation.

RHD model

	Terminals	High-pressure side line pressure kPa (bar, kg/cm², psi)	Operation	Continuity
Low-pressure side	① - ④	Increasing to 157 - 216 (1.57 - 2.16, 1.6 - 2.2, 23 - 31)	ON	Exists.
		Decreasing to 152.0 - 201.0 (1.520 - 2.010, 1.55 - 2.05, 22.0 - 29.2)	OFF	Does not exist.
Medium-pressure side*	② - ③	Increasing to 1,442 - 1,697 (14.42 - 16.97, 14.7 - 17.3, 209 - 246)	ON	Exists
		Decreasing to 1,128 - 1,422 (11.28 - 14.22, 11.5 - 14.5, 164 - 206)	OFF	Does not exist.
High-pressure side	① - ④	Decreasing to 1,275 - 1,667 (12.7 - 16.7, 13 - 17, 185 - 242)	ON	Exists.
		Increasing to 2,452 - 2,844 (24.5 - 28.4, 25 - 29, 356 - 412)	OFF	Does not exist.

* For cooling fan motor operation

Electrical Components Inspection (Cont'd)

THERMAL PROTECTOR

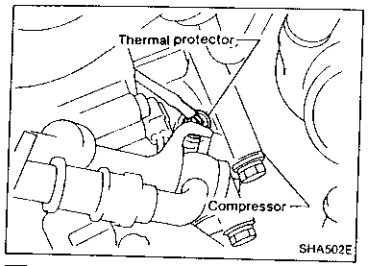

Temperature of compressor °C (°F)	Operation
Increasing to approx. 145 - 155 (293 - 311)	Turn OFF
Decreasing to approx. 130 - 140 (266 - 284)	Turn ON

A/C RELAY

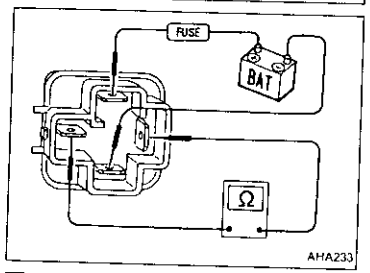

Check circuit continuity between terminals by supplying 12 volts to coil side terminals of the relay.

AIR MIX DOOR MOTOR

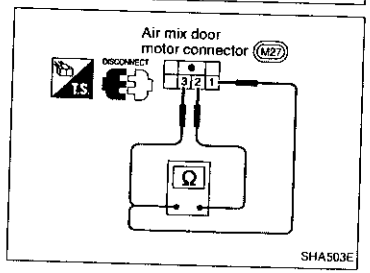

Check for PBR resistance.

1. Turn ignition switch ON and temperature control lever to FULL HOT position.
2. Turn ignition switch OFF.
3. Disconnect air mix door motor connector.
4. Check for resistance between air mix door motor harness terminal ③ and ②.
5. Using above procedures, check for each terminal as indicated in chart below.

Terminal No.		Temp control lever position	Resistance
③	②	FULL HOT	Approx. 0Ω
③	②	FULL COLD	Approx 3 kΩ
①	②	FULL HOT	Approx 3 kΩ
①	②	FULL COLD	Approx. 0Ω

Control Linkage Adjustment

MODE DOOR

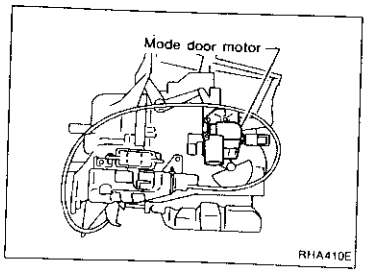

1. Install mode door motor on heater unit and connect it to main harness.
2. Turn ignition switch to ON.
3. Turn VENT switch ON.
4. Turn DEF switch ON. Check that side link operates at the fully-open position. Also turn DEF switch ON to check that side link operates at the fully-open position.

Control Linkage Adjustment (Cont'd)

AIR MIX DOOR

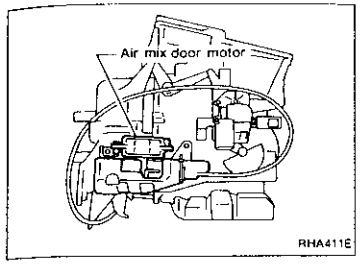

1. Move air mix door link by hand and hold air mix door in full cold position.
2. Install air mix door motor on heater unit and connect sub-harness.
3. Turn ignition switch to ON.
4. Slide temperature control lever to full cold.
5. Attach air mix door motor rod to air mix door link rod holder.
6. Check that air mix door operates properly when temperature control lever is slid to full hot and full cold.
7. Slide temperature control lever to full cold.

INTAKE DOOR

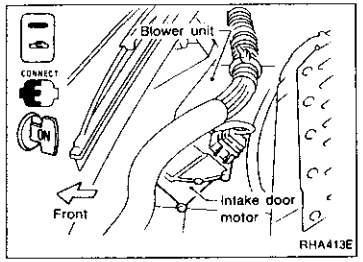

1. Connect intake door motor harness connector before installing intake door motor.
2. Turn ignition switch to ON.
3. Turn REC switch ON.
4. Install intake door motor on intake unit.
5. Set intake door rod in REC position and fasten door rod to holder.
6. Check that intake door operates properly when REC switch is turned ON and OFF.

BI-LEVEL (B/L) DOOR

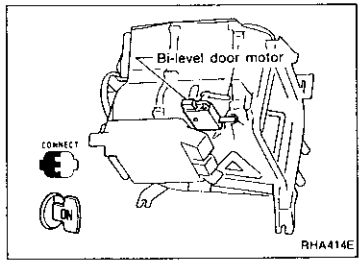

1. Connect B/L door motor harness connector before installing B/L door motor.
2. Turn ignition switch to ON.
3. Install B/L door motor on heater unit.
4. Check that B/L door operates properly when bi-level switch is turned ON and OFF.

Introduction

The Automatic Temperature Control (ATC) system provides automatic regulation of the vehicles interior temperature. The operator selects "set temperature", on which the regulation is based, regardless of the outside temperature changes. This is done by utilizing a microcomputer, also referred to as the automatic amplifier (auto amp.), which receives input signals from several sensors. The automatic amplifier uses these input signals (including the set temperature) to automatically control the ATC system's outlet air volume, air temperature, and air distribution.

Features

Air mix door control (Automatic temperature control)

The air mix door is automatically controlled so that in-vehicle temperature is maintained at a predetermined value by: The temperature setting, ambient temperature, in-vehicle temperature and amount of sunload.

Fan speed control

Blower speed is automatically controlled based on temperature setting, ambient temperature, in-vehicle temperature, amount of sunload and air mix door position.
With FAN switch set to "AUTO", the blower motor starts to gradually increase air flow volume.
When engine coolant temperature is low, the blower motor operation is delayed to prevent cool air from flowing.

Intake door control

The intake doors are automatically controlled by: The temperature setting, ambient temperature, in-vehicle temperature and amount of sunload.

Mode door control

The mode doors (defroster door, ventilator door and foot door) are automatically controlled by: The temperature setting, ambient temperature, in-vehicle temperature and amount of sunload.

Bi-level door control

The bi-level door is opened to increase amount of air discharge when the air discharge outlet is set at bi-level position. The bi-level door is also opened when the fan speed is high and the set temperature is at 18°C.
Except during the above conditions, the bi-level door is closed.

Self-diagnostic system

The self-diagnostic system is built into the automatic amplifier to quickly locate the cause of problems.

Control Operation

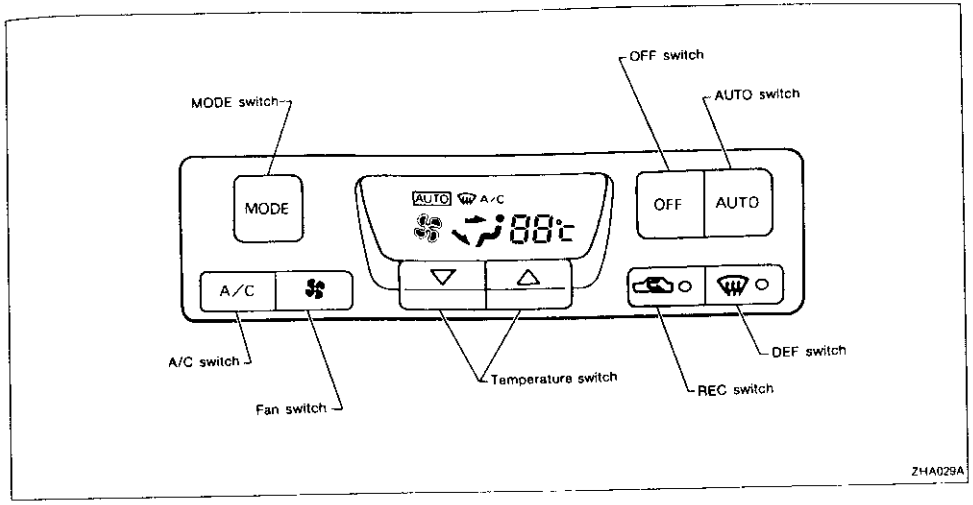

AUTO SWITCH

The compressor, air intake doors, air mix door, mode doors, and blower speed are automatically controlled so that the in-vehicle temperature will reach, and be maintained at the set temperature.
The air conditioning cooling function operates only when the engine is running.

A/C SWITCH

Manual control of the compressor operation. When the A/C mark appears on the display screen, compressor operation is being carried out.

TEMPERATURE SWITCH

Increases or decreases the set temperature.

OFF SWITCH

The compressor and blower are off, the air intake doors are set to the outside air position. Then, the mode doors are set to the foot (80% foot and 20% defrost) position. In the off position the ATC system uses the vehicle's "flow through" ventilation. It tries to maintain the interior temperature based on the last set temperature of the system.

FAN SWITCH

Manual control of the blower speed. Four speeds are available for manual control (as shown on the display screen):
low , medium low , medium high , high

MODE SWITCH

Manual control of the air discharge outlets. Four selections are available (as shown on the display screen):
face , bi-level , foot , defrost/foot

Control Operation (Cont'd)

REC SWITCH

ON position: Interior air is recirculated inside the vehicle.
OFF position: Automatic control resumes.
RECIRC is canceled when DEF is selected. RECIRC resumes when another mode is chosen.

DEF SWITCH

Positions the mode doors to the defrost position. Also positions the air intake doors to the outside air position. With DEF switch ON, the compressor operates.

NOTE

Contents

How to Perform Trouble Diagnoses for Quick and Accurate Repair ..... HA- 78
Operational Check ..... HA- 79
Symptom Chart ..... HA- 82
Self-diagnosis ..... HA- 84
CHECKING PROCEDURE ..... HA- 84
STEP 1: Checks LEDs and segments ..... HA- 85
STEP 2: Checks each sensor circuit for open or short circuit ..... HA- 88
STEP 3: Checks mode and intake door positions ..... HA- 88
STEP 4: Checks operation of each actuator ..... HA- 89
STEP 5: Checks temperature detected by sensors ..... HA- 90
AUXILIARY MECHANISM: Temperature setting trimmer ..... HA- 90
Preliminary Check ..... HA- 92
PRELIMINARY CHECK 1 (Air outlet does not change.) ..... HA- 93
PRELIMINARY CHECK 2 (Intake door does not change.) ..... HA- 93
PRELIMINARY CHECK 3 (Insufficient cooling) ..... HA- 94
PRELIMINARY CHECK 4 (Insufficient heating) ..... HA- 95
PRELIMINARY CHECK 5 (Blower motor operation is malfunctioning.) ..... HA- 96
PRELIMINARY CHECK 6 (Magnet clutch does not engage.) ..... HA- 97
PRELIMINARY CHECK 7 (Discharged air temperature does not change.) ..... HA- 98
PRELIMINARY CHECK 8 (Noise) ..... HA- 99
Performance Test Diagnoses HA-100
Performance Chart ..... HA- 26
Trouble Diagnoses for Abnormal Pressure ..... HA- 28
Harness Layout ..... HA- 29
Circuit Diagram HA-101
Wiring Diagram — A/C, A — HA-103
Main Power Supply and Ground Circuit Check HA-104
Diagnostic Procedure 1
SYMPTOM: Ambient sensor circuit is open or shorted.
(21 or −21 is indicated on display as a result of conducting Self-diagnosis STEP 2.) HA-111
Diagnostic Procedure 2
SYMPTOM: In-vehicle sensor circuit is open or shorted.
(22 or −22 is indicated on display as a result of conducting Self-diagnosis STEP 2.) HA-112
Diagnostic Procedure 3
SYMPTOM: Sunload sensor circuit is open or shorted.
(25 or −25 is indicated on display as a result of conducting Self-diagnosis STEP 2.) HA-113
Diagnostic Procedure 4
SYMPTOM: PBR circuit is open or shorted.
(26 or −26 is indicated on display as a result of conducting Self-diagnosis STEP 2.) HA-114
Diagnostic Procedure 5
SYMPTOM: Mode door motor does not operate normally. HA-115
Diagnostic Procedure 6
SYMPTOM: Intake door motor does not operate normally. HA-117

Contents (Cont'd)

Diagnostic Procedure 7
SYMPTOM: Air mix door motor does not operate normally. HA-118
Diagnostic Procedure 8
SYMPTOM: Bi-level (B/L) door motor does not operate normally. HA-119
Diagnostic Procedure 9
SYMPTOM: Blower motor operation is malfunctioning under out of Starting Fan Speed Control. HA-120
Diagnostic Procedure 10
SYMPTOM: Magnet clutch does not engage after performing Preliminary Check 6. ..... HA-122
Control Linkage Adjustment HA-125

How to Perform Trouble Diagnoses for Quick and Accurate Repair

WORK FLOW

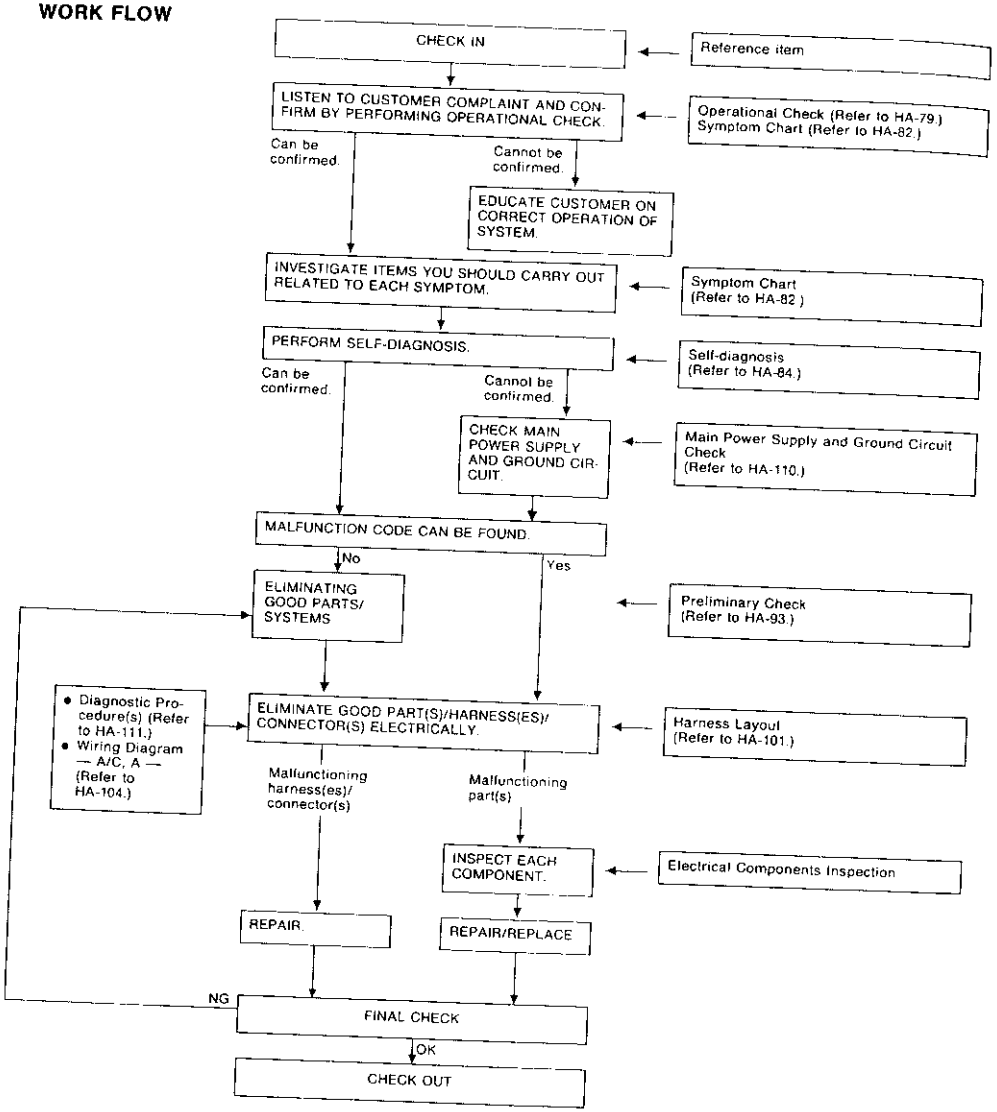

Operational Check

The purpose of the operational check is to confirm that the system is as it should be. The systems which will be checked are the blower, mode (discharge air), intake air, temperature decrease, temperature increase, A/C switch and the memory function.

CONDITIONS:

- **Engine running and at normal operating temperature.**

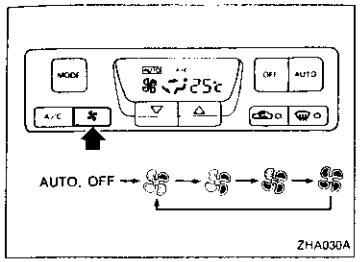

PROCEDURE:

1. Check blower

1) Press fan switch one time.
   Blower should operate on low speed.
   The fan symbol should have one blade lit.
2) Press fan switch one more time.
3) Continue checking blower speed and fan symbol until all speeds are checked.
4) Leave blower on MAX speed.

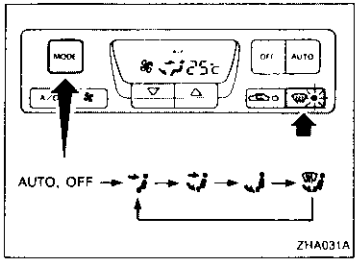

2. Check discharge air.

1) Press mode switch four times and DEF switch one time.
   When DEF switch is ON, DEF indicator should illuminate.

Discharge air flow

Switch mode/ indicator	Air outlet/distribution		
	Face	Foot	Defroster
	100%	–	–
	60%	40%	–
	–	80%	20%
	–	60%	40%
	–	–	100%

RHA429EA

2) Confirm that discharge air comes out according to the air distribution table at left.

Refer to "Discharge Air Flow", "DESCRIPTION" (HA-12).

NOTE:

Confirm that the compressor clutch is engaged (visual inspection) and intake door position is at FRESH when the DEF switch is pressed.
Intake door position is checked in the next step.

Operational Check (Cont'd)

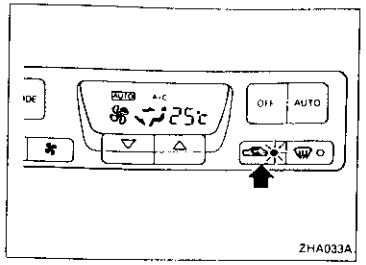

ZHA033A

3. Check recirc

1) Press REC switch.
   Recirc indicator should illuminate.
2) Listen for intake door position change (you should hear blower sound change slightly).

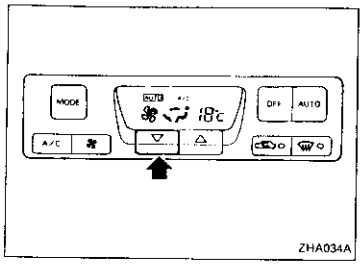

ZHA034A

4. Check temperature decrease

1) Press the temperature switch (COLD) until 18°C is displayed.
2) Check for cold air at discharge air outlets.

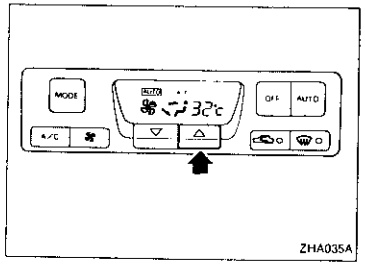

ZHA035A

5. Check temperature increase

1) Press the temperature switch (HOT) until 32°C is displayed.
2) Check for hot air at discharge air outlets.

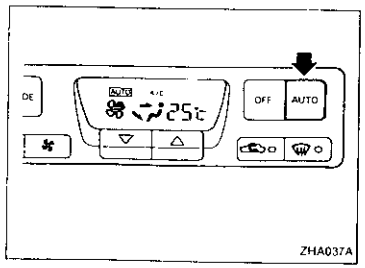

ZHA037A

6. Check AUTO mode

1) Press AUTO switch.
2) Display should indicate AUTO and A/C.
   Confirm that the compressor clutch engages (audio or visual inspection).
   (Discharge air will depend on ambient, in-vehicle, and set temperatures).

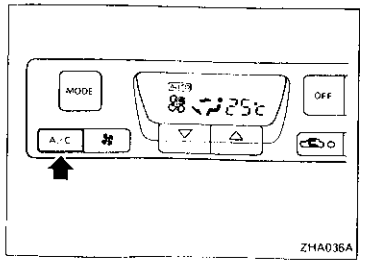

ZHA036A

7. Check A/C mode

1) Press A/C switch.
2) Display should indicate AUTO (A/C goes out).
   Confirm that the compressor clutch is not engaged (visual inspection).
   (Discharge air will depend on ambient, in-vehicle, and set temperatures).
3) Repress A/C switch. Display should indicate A/C and the compressor clutch is engaged.

Operational Check (Cont'd)

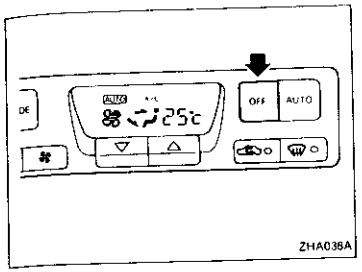

ZHA038A

8. Check memory function

1) Press OFF switch
2) Turn the ignition off.
3) Turn the ignition on.
4) Press the AUTO switch.
5) Confirm that the set temperature remains at previous temperature.

Symptom Chart

DIAGNOSTIC TABLE

PROCEDURE / SYMPTOM (DIAGNOSTIC ITEM AND REFERENCE PAGE)	Self-diagnosis: STEP 1 (HA-85, 88)	Self-diagnosis: STEP 2 (HA-85, 88)	Self-diagnosis: STEP 3 (HA-88, 89)	Self-diagnosis: STEP 4 (HA-86, 90)	Self-diagnosis: STEP 5 (HA-87, 90)	AUXILIARY MECHANISM (HA-92)	Preliminary Check 1 (HA-93)	Preliminary Check 2 (HA-94)	Preliminary Check 3 (HA-95)	Preliminary Check 4 (HA-96)	Preliminary Check 5 (HA-97)	Preliminary Check 6 (HA-98)	Preliminary Check 7 (HA-99)	Preliminary Check 8 (HA-100)	Diagnostic Procedure 1 (HA-111)	Diagnostic Procedure 2 (HA-112)	Diagnostic Procedure 3 (HA-113)	Diagnostic Procedure 4 (HA-114)
Air outlet does not change.	❶	❷	○	○	○		❸								○	○	○	○
Intake door does not change.	❶	❷		○	○			❸							○	○	○	○
Insufficient cooling	○	○	○	○	○	○	○	○	❶		○	○	○		○	○	○	○
Insufficient heating	○	○	○	○	○	○	○	○		❶	○		○		○	○	○	○
Blower motor operation is malfunctioning.	❶	❷		○	○						❸				○	○	○	○
Magnet clutch does not engage.	❶	❷		○	○							❸			○	○	○	○
Discharged air temperature does not change.	❶	❷		○	○								❸		○	○	○	○
Noise														❶				
Result of self-diagnosis STEP 2: 21 Ambient sensor circuit is open.	❶	❷			❸										❹			
Result of self-diagnosis STEP 2: 22 In-vehicle sensor circuit is open.	❶	❷			❸											❹		
Result of self-diagnosis STEP 2: 25 Sunload sensor circuit is open.	❶	❷															❸	
Result of self-diagnosis STEP 2: 26 PBR circuit is open.	❶	❷																❸
Result of self-diagnosis STEP 2: -21 Ambient sensor circuit is shorted.	❶	❷			❸										❹			
Result of self-diagnosis STEP 2: -22 In-vehicle sensor circuit is shorted.	❶	❷			❸											❹		
Result of self-diagnosis STEP 2: -25 Sunload sensor circuit is shorted.	❶	❷															❸	
Result of self-diagnosis STEP 2: -26 PBR circuit is shorted.	❶	❷																❸
Mode door motor does not operate normally	❶	❷	❸	❹	○										○	○	○	○
Intake door motor does not operate normally.	❶	❷		❸	○										○	○	○	○
Air mix door motor does not operate normally	❶	❷		❸	○										○	○	○	○
Bi-level door motor does not operate normally.	❶	❷		❸														
Blower motor operation is malfunctioning under out of Starting Fan Speed Control.	❶	❷		○	○						❸				○	○	○	○
Magnet clutch does not operate after performing Preliminary Check 6.	❶	❷		○	○							❸			○			
Self-diagnosis cannot be performed.																		

❶, ❷: The number means checking order.
○: As for checking order, refer to each flow chart (It depends on malfunctioning portion.)

Symptom Chart (Cont'd)

SYMPTOM	Diagnostic Procedure 5 (HA-115)	Diagnostic Procedure 6 (HA-117)	Diagnostic Procedure 7 (HA-118)	Diagnostic Procedure 8 (HA-119)	Diagnostic Procedure 9 (HA-120)	Diagnostic Procedure 10 (HA-122)	Main Power Supply and Ground Circuit Check: Auto amp (BCM) (HA-110)	7.5A Fuse #15 (HA-110)	15A Fuses #7 and #8 (HA-110)	7.5A Fuse #19 (HA-110)	7.5A Fuse #42 (HA-110)	Electrical Components Inspection: Ambient sensor (HA-129)	In-vehicle sensor (HA-128)	Thermal transmitter	Sunload sensor (HA-129)	PBR (HA-132)	Air mix door motor (HA-131)	Mode door motor (HA-133)	Intake door motor (HA-135)	Bi-level door motor (HA-126)	Blower motor (HA-68)	Fan control amp. (HA-137)	A/C relay (HA-70)	Triple-pressure switch (HA-69)	Magnet clutch (Compressor) (HA-146)	Auto amp. (HA-130)	ECM (ECCS control module) (EC)	Cooling fan motor (EC)	Cooling fan relay (EC)	Harness
Air outlet does not change.	○			○			○	○	○		○	○	○		○	○		○		○						○				○
Intake door does not change.		○					○	○	○		○	○	○		○	○			○							○				○
Insufficient cooling	○	○	○	○	○	○	○	○	○	○	○	○	○		○	○	○	○	○	○	○	○	○	○	○	○	○	○	○	○
Insufficient heating				○			○	○	○		○	○	○		○	○	○	○	○	○	○	○				○				○
Blower motor operation is malfunctioning.					○		○	○	○		○	○	○	○	○	○					○	○				○	○			○
Magnet clutch does not engage.						○	○	○	○	○	○	○											○	○	○	○	○			○
Discharged air temperature does not change.			○					○	○	○	○	○	○		○	○	○									○				
Noise																														
21 Ambient sensor circuit is open.												○														○				○
22 In-vehicle sensor circuit is open.													○													○				○
25 Sunload sensor circuit is open.															○											○				○
26 PBR circuit is open.																○										○				○
-21 Ambient sensor circuit is shorted.												○														○				○
-22 In-vehicle sensor circuit is shorted.													○													○				○
-25 Sunload sensor circuit is shorted.															○											○				○
-26 PBR circuit is shorted.																○										○				○
Mode door motor does not operate normally	❺						○	○	○		○	○	○		○	○		○								○				○
Intake door motor does not operate normally.		❹					○		○		○	○	○		○	○			○							○				○
Air mix door motor does not operate normally			❹					○	○		○	○	○		○	○	○									○				○
Bi-level door motor does not operate normally.				❹																○										○
Blower motor operation is malfunctioning under out of Starting Fan Speed Control.					❹		○	○	○		○	○	○	○	○	○					○	○				○	○			○
Magnet clutch does not operate after performing Preliminary Check 6.						❹		○	○	○	○	○											○	○	○	○	○			○
Self-diagnosis cannot be performed.							❶																			○				○

Self-diagnosis

The self-diagnostic system diagnoses sensors, door motors, blower motor, etc. by system line. Refer to applicable sections (items) for details. Shifting from normal control to the self-diagnostic system is done as follows. Start the engine (turn the ignition switch from "OFF" to "ON"). And press " OFF " switch for at least 5 seconds. The " OFF " switch must be pressed within 5 seconds after starting the engine (ignition switch is turned "ON"). This system will be canceled by either pressing AUTO switch or turning the ignition switch "OFF". Shifting from one step to another is accomplished by means of pushing ▲ (HOT) or ▼ (COLD) switch, as required.
Additionally shifting from STEP 5 to AUXILIARY MECHANISM is accomplished by means of pushing (fan) switch.

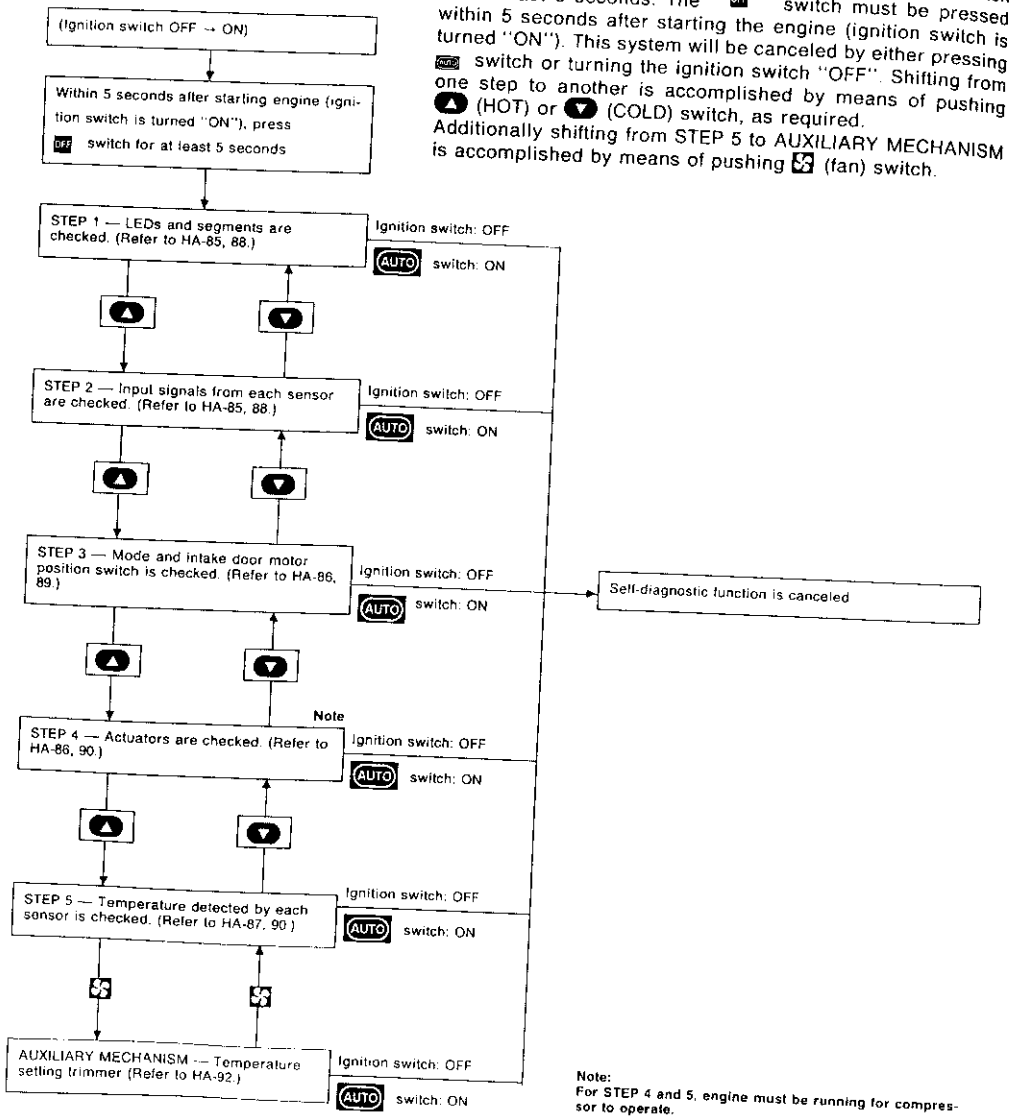

Note:
For STEP 4 and 5, engine must be running for compressor to operate.

Self-diagnosis (Cont'd)

CHECKING PROCEDURE

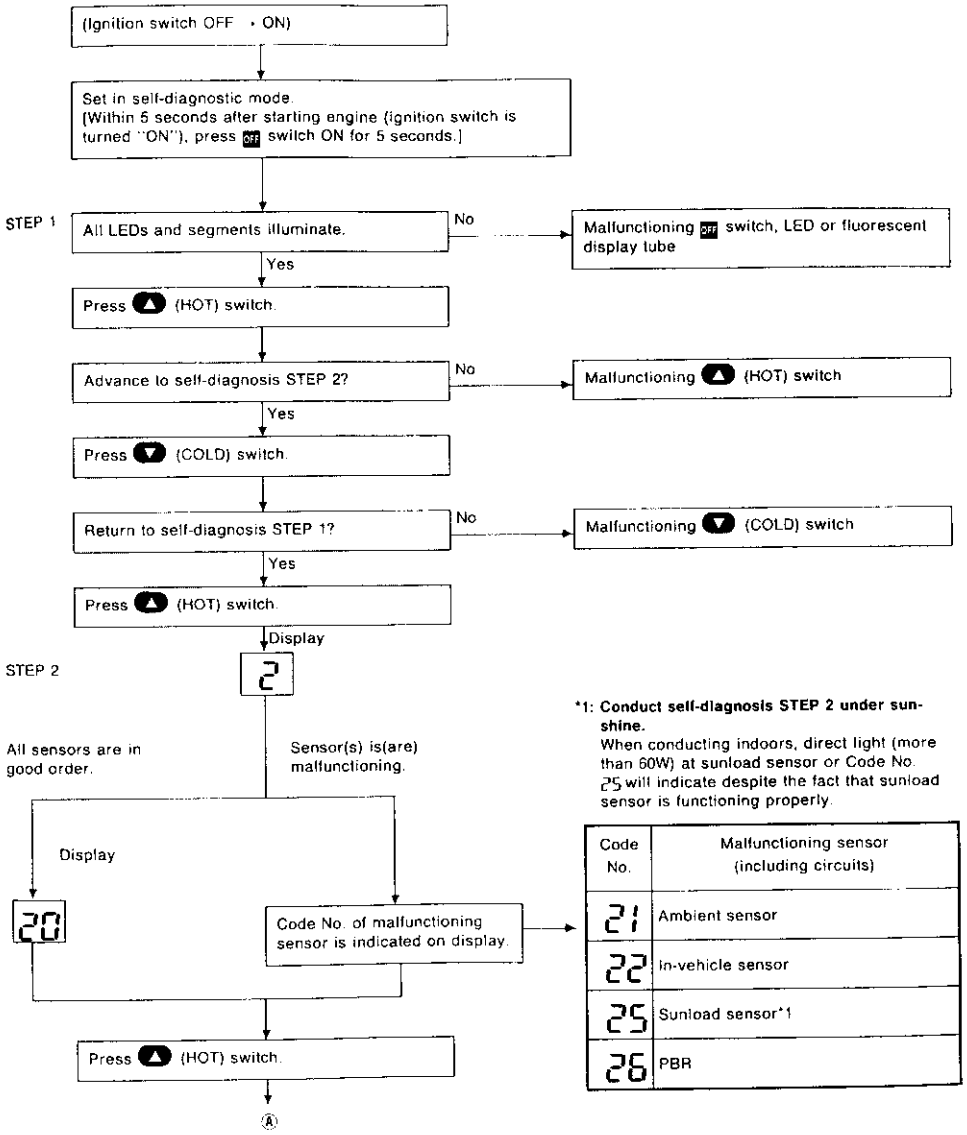

***1: Conduct self-diagnosis STEP 2 under sunshine.**
When conducting indoors, direct light (more than 60W) at sunload sensor or Code No. 25 will indicate despite the fact that sunload sensor is functioning properly.

Code No.	Malfunctioning sensor (including circuits)
21	Ambient sensor
22	In-vehicle sensor
25	Sunload sensor*1
26	PBR

Note:
At any time, you can return to a previous step in the self-diagnosis by pressing the ▼ (COLD) switch.

Self-diagnosis (Cont'd)

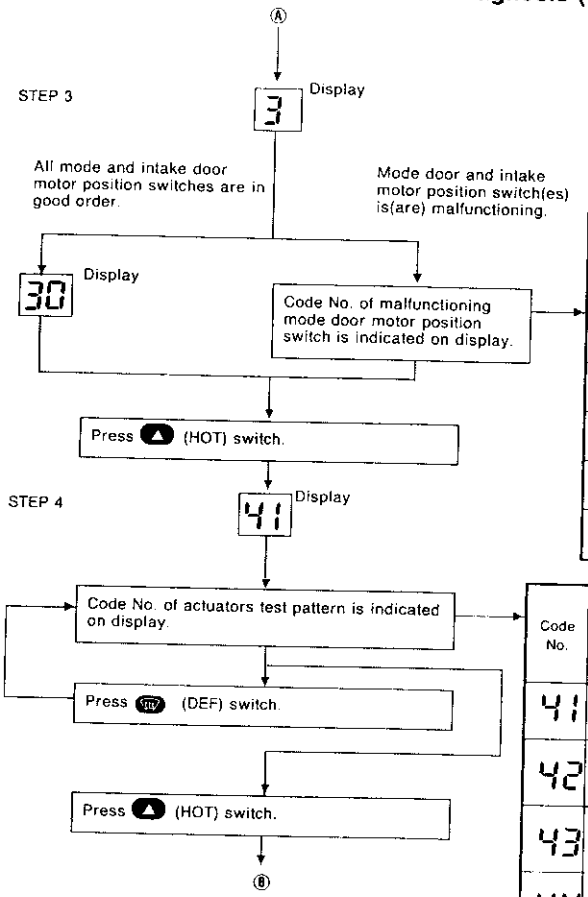

Code No	Malfunctioning part or circuit	
	Position switch	
31	VENT	Mode door motor
32	B/L	
33	FOOT	
34	FOOT/DEF	
35	DEF	
36	FRE	Intake door motor
38	20% FRE	
39	REC	

Code No.	Actuators test pattern					
	Mode door	Intake door	Air mix door	Bi-level door	Blower motor	Compressor
41	VENT	REC	Full Cold	OPEN	4 - 5V	ON
42	B/L	REC	Full Cold	OPEN	9 - 11V	ON
43	B/L	20% FRE	Full Hot	CLOSE	7 - 9V	ON
44	FOOT	FRE	Full Hot	CLOSE	7 - 9V	OFF
45	F/D	FRE	Full Hot	CLOSE	7 - 9V	OFF
46	DEF	FRE	Full Hot	CLOSE	10 - 12V	ON

Note:
For STEP 4, engine must be running for compressor to operate.

Self-diagnosis (Cont'd)

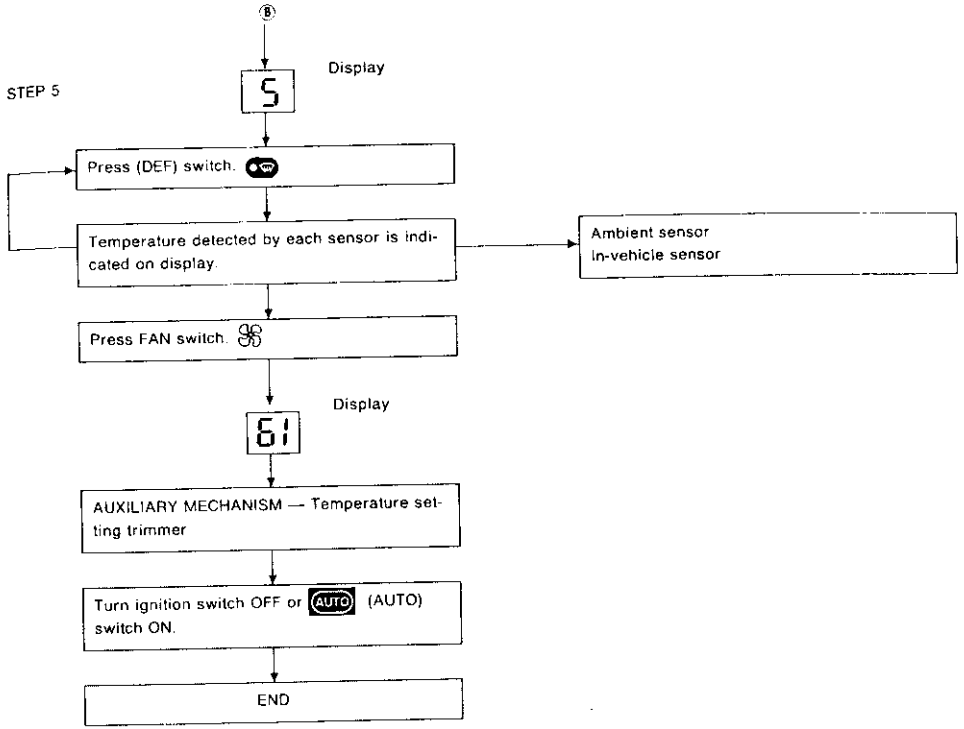

Self-diagnosis (Cont'd)

HOW TO INTERPRET THE RESULTS

STEP 1: Checks LEDs and segments

When switch's LED and segments are in functioning properly in STEP 1, LED and display will come on.

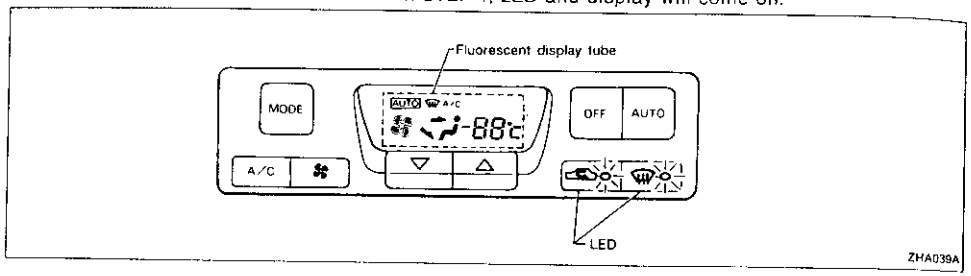

Display malfunction

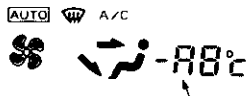

ZHA040A

If LEDs or segments malfunction, LED will not come on or display will show incomplete segment.

Display (when all sensors are in good order)

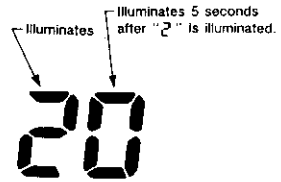

RHA499AA

STEP 2: Checks each sensor circuit for open or short circuit

Display shows "2 " in STEP 2 mode.
When all sensors are in good order, display shows "20".
It takes approximately 5 seconds to check all sensors.

Display (when sensor malfunctions)

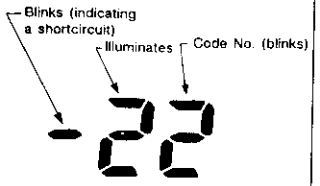

ZHA042A

If a sensor is malfunctioning, the corresponding code No. blinks on display. A short circuit is identified by a blinking "–" mark preceding mode number.

Self-diagnosis (Cont'd)

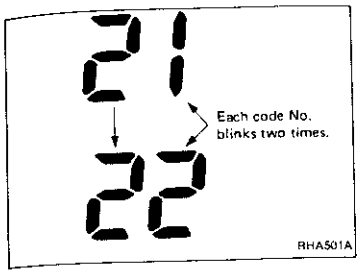

RHA501A

If two or more sensors malfunction, corresponding code Nos. respectively blink two times.

Sensors and abnormalities

If a circuit is opened or shorted, display shows its code No. when input corresponds with any of following conditions.

Code No.	Sensor	Open circuit	Short circuit
21	Ambient sensor	Less than –41.9°C (–43°F)	Greater than 100°C (212°F)
22	In-vehicle sensor	Less than –41.9°C (–43°F)	Greater than 100°C (212°F)
25	Sunload sensor*2	Less than 4.5 mA	Greater than 192 mA
26	PBR*1	Greater than 50%	Less than 30%

*1: "50%" and "30%" refer to percentage with respect to full stroke of air mix door. (Full cold: 10%, Full hot: 90%)

*2: **Conduct self-diagnosis STEP 2 under sunshine.**
When conducting indoors, direct light (more than 60W) at sunload sensor.

Display (when all doors are in good order) Illuminates 20 seconds after "3" is shown on display.

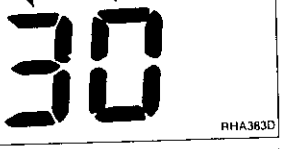

RHA363D

Display (when a door is out of order)

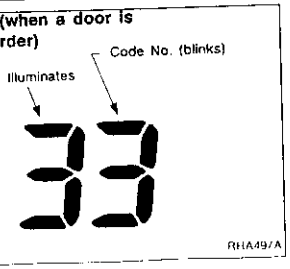

RHA497A

STEP 3: Checks mode and intake door positions

Display shows "3 " in STEP 3 mode.
When all doors are in good order, display will then show "30".
It takes approximately 20 seconds to check all mode and intake doors.

When abnormalities are detected, display shows a code No. corresponding with malfunctioning part.

Code No.	31	32	33	34	35	36	38	39
Malfunctioning part	VENT	B/L	FOOT	FOOT/DEF	DEF	FRE	20% FRE	REC

Self-diagnosis (Cont'd)

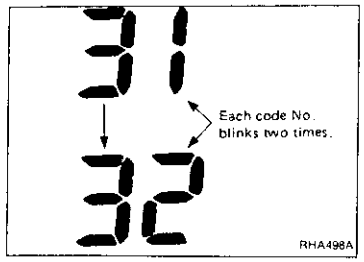

If two or more mode or intake doors are out of order, corresponding code numbers respectively blink two times.
If mode door motor harness connector is disconnected, the following display pattern will appear.

31 → 32 → 33 → 34 → 35

If intake mode door harness connector is disconnected, the following display pattern will appear.

36 → 38 → 39

If any mode door motor position switch is malfunctioning, mode door motor will also malfunction.

STEP 4: Checks operation of each actuator

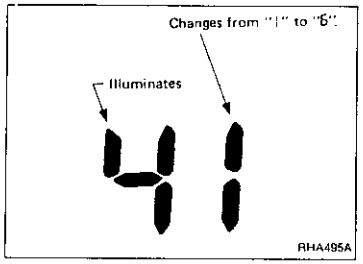

Display shows "41" in STEP 4 mode.
When DEF switch is pressed one time, display shows "42". Thereafter, each time the switch is pressed, display advances one number at a time, up to "46", then returns to "41".

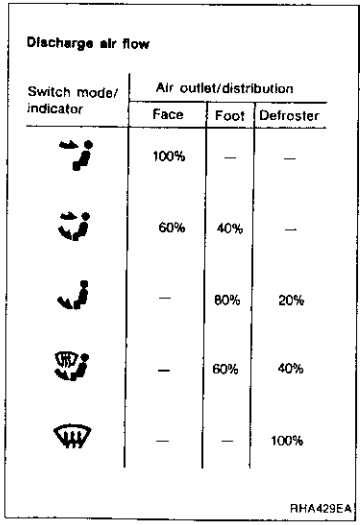

During inspection in STEP 4, the auto amp. will forcefully transmit an output to the affected actuators. The corresponding code Nos. are shown on display as indicated in the table below.
Checks must be made visually, by listening to any noise, or by touching air outlets with your hand, etc. for improper operation.

Code No. / Actuator	41	42	43	44	45	46
Mode door	VENT	B/L	B/L	FOOT	F/D	DEF
Intake door	REC	REC	20% FRE	FRE	FRE	FRE
Air mix door	Full Cold	Full Cold	Full Hot	Full Hot	Full Hot	Full Hot
Blower motor	4 - 5 V	9 -11 V	7 - 9 V	7 - 9 V	7 - 9 V	10 - 12 V
Compressor	ON	ON	ON	OFF	OFF	ON
Bi-level door	Open	Open	Shut	Shut	Shut	Shut

Operating condition of each actuator cannot be checked by indicators.

STEP 5: Checks temperature detected by sensors

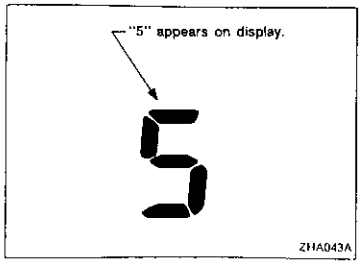

Checks temperature detected by sensors
Display shows "5" in STEP 5 mode.

- When DEF switch is pressed one time, display shows temperature detected by ambient sensor.
- When DEF switch is pressed second time, display shows temperature detected by in-vehicle sensor.
- When DEF switch is pressed third time, display returns to original presentation "5".

Self-diagnosis (Cont'd)

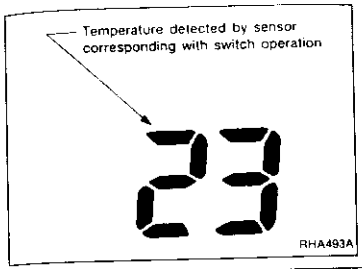

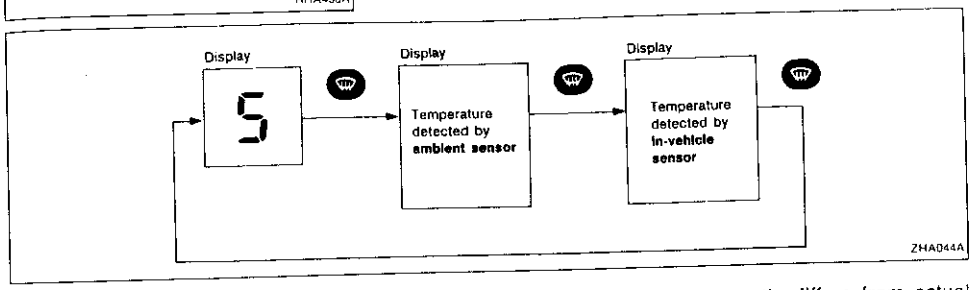

If temperature shown on display greatly differs from actual temperature, check sensor circuit at first. Then inspect sensor itself according to the procedures described in **Control System Input Component**. Refer to HA-128.

Self-diagnosis (Cont'd)

AUXILIARY MECHANISM: Temperature setting trimmer

This trimmer compensates for differences between temperature setting (displayed digitally) and temperature felt by driver in a range of ±3°C.

Operating procedures for this trimmer are as follows:

Starting with STEP 5 under "Self-diagnostic mode", press (fan) switch to set air conditioning system in auxiliary mode. Then, press either (HOT) or (COLD) switch as desired. Temperature will change at a rate of 1°C each time a switch is pressed.

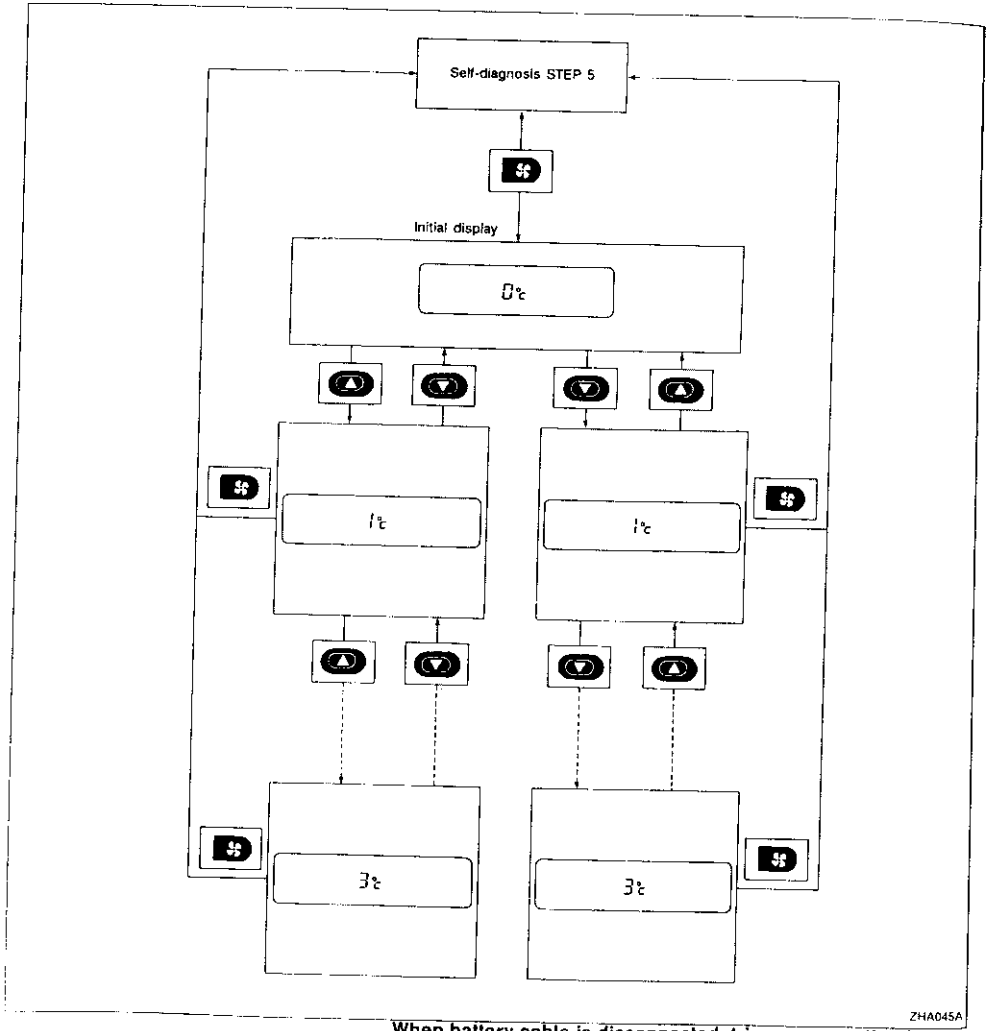

When battery cable is disconnected, trimmer operation is canceled and temperature set becomes that of initial condition, i.e. 0°C.

Preliminary Check

PRELIMINARY CHECK 1

Air outlet does not change.

- **Perform Self-diagnosis STEP 1 before referring to the flow chart.**

CHECK SENSOR CIRCUIT.
Set up Self-diagnosis STEP 2.
Is each sensor circuit normal?
Code No. 20 should be indicated on the display after approx. 5 seconds.

NG → CHECK SENSOR CIRCUIT IN DETAIL ACCORDING TO THE DIAGNOSTIC PROCEDURE BELOW CORRESPONDING TO EACH CODE NO.

Code No.	How to repair	Reference page
21	Go to Diagnostic Procedure 1.	HA-111
22	Go to Diagnostic Procedure 2.	HA-112
25	Go to Diagnostic Procedure 3.	HA-113
26	Go to Diagnostic Procedure 4.	HA-114
-21	Go to Diagnostic Procedure 1.	HA-111
-22	Go to Diagnostic Procedure 2.	HA-112
-25	Go to Diagnostic Procedure 3.	HA-113
-26	Go to Diagnostic Procedure 4.	HA-114

Are sensor circuits for ambient sensor and in-vehicle sensor operating normally? If malfunction is suspected, check temperature detected by each sensor using Self-diagnosis STEP 5. Confirm the temperature is within normal range before performing Diagnostic Procedures.

OK ↓

CHECK MODE DOOR MOTOR.
Set up Self-diagnosis STEP 3.
Is mode door motor operating normally?
Code No. 30 should be indicated on the display after approx. 20 seconds.

NG → Go to **Diagnostic Procedure 5.** (HA-115)

OK ↓

CHECK MODE DOOR OPERATION.
Set up Self-diagnosis STEP 4.
Does air outlet change according to each code No.?

41	42	43	44	45	46
VENT	B/L	B/L	FOOT	F/D	DEF

Refer to Discharge Air Flow. (HA-12)

NG → CHECK SIDE LINK MECHANISM.
Refer to CONTROL LINKAGE ADJUSTMENT. (HA-125)

NG → Repair.

OK ↓

Go to **Diagnostic Procedure 5.** (HA-115)

OK ↓

Air outlet control system is normal. Refer to **Mode door control specification.** (HA-133)

PRELIMINARY CHECK 2

Intake door does not change.

- **Perform Self-diagnosis STEP 1 before referring to the following flow chart.**

CHECK SENSOR CIRCUIT.
Set up Self-diagnosis STEP 2.
Is each sensor circuit normal?
Code No. 20 should be indicated on the display after approx. 5 seconds later.

NG → CHECK SENSOR CIRCUIT IN DETAIL ACCORDING TO THE DIAGNOSTIC PROCEDURE BELOW CORRESPONDED TO EACH CODE NO.

Code No.	How to repair	Reference page
21	Go to Diagnostic Procedure 1.	HA-111
22	Go to Diagnostic Procedure 2.	HA-112
25	Go to Diagnostic Procedure 3.	HA-113
26	Go to Diagnostic Procedure 4.	HA-114
-21	Go to Diagnostic Procedure 1.	HA-111
-22	Go to Diagnostic Procedure 2.	HA-112
-25	Go to Diagnostic Procedure 3.	HA-113
-26	Go to Diagnostic Procedure 4.	HA-114

Are sensor circuits for ambient sensor and in-vehicle sensor operating normally? If malfunction is suspected, check temperature detected by each sensor using Self-diagnosis STEP 5. Confirm the temperature is within normal range before performing Diagnostic Procedures.

OK ↓

CHECK INTAKE DOOR MOTOR.
Set up Self-diagnosis STEP 3.
Is intake door motor operating normally?
Code No. 30 should be indicated on the display after approx. 20 seconds.

NG → Go to Diagnostic Procedure 6. (HA-117)

OK ↓

CHECK INTAKE DOOR MOTOR OPERATION.
Set up Self-diagnosis STEP 4.
Does intake air change according to each code No ?

41	42	43	44	45	46
REC	REC	20% FRE	FRE	FRE	FRE

No → CHECK INTAKE DOOR ROD or LEVER MECHANISM.
Refer to CONTROL LINKAGE ADJUSTMENT. (HA-126)

NG → Repair or adjust.

OK → Go to **Diagnostic Procedure 6.** (HA-117)

Yes ↓

Intake door control system is normal.
Refer to **Intake door control specification.** (HA-134)

PRELIMINARY CHECK 3

Insufficient cooling

CHECK MODE DOOR OPERATION.
NG → Go to **Preliminary Check 1.** (HA-93)

OK ↓

CHECK INTAKE DOOR OPERATION.
NG → Go to **Preliminary Check 2.** (HA-94)

OK ↓

CHECK BLOWER MOTOR OPERATION.
NG → Go to **Preliminary Check 5.** (HA-97)

OK ↓

CHECK MAGNET CLUTCH OPERATION.
NG → Go to **Preliminary Check 6.** (HA-98)

OK ↓

CHECK COMPRESSOR BELT TENSION.
Refer to MA section.
NG → Adjust or replace compressor belt.

OK ↓

CHECK AIR MIX DOOR OPERATION.
NG → Go to **Preliminary Check 7.** (HA-99)

OK ↓

CHECK COOLING FAN MOTOR OPERATION.
NG → Go to **EC section.**

OK ↓

CHECK REFRIGERATION CYCLE PRESSURE WITH MANIFOLD GAUGE CONNECTED.
Refer to **Performance Chart.** (HA-28)
NG → Go to **Performance Test Diagnoses.** (HA-26)

OK ↓

CHECK FOR EVAPORATOR COIL FREEZE UP
NG → Check thermo control amp operation. (Freezes up.)

OK (Does not freeze up.) ↓

CHECK DUCTS FOR AIR LEAKS.
NG → Repair air leaks.

OK ↓

PERFORM TEMPERATURE SETTING TRIMMING.
1. Set up AUXILIARY MECHANISM mode in self-diagnosis.
2. Press ▼ (COLD) switch at desirable times

PRELIMINARY CHECK 4

Insufficient heating

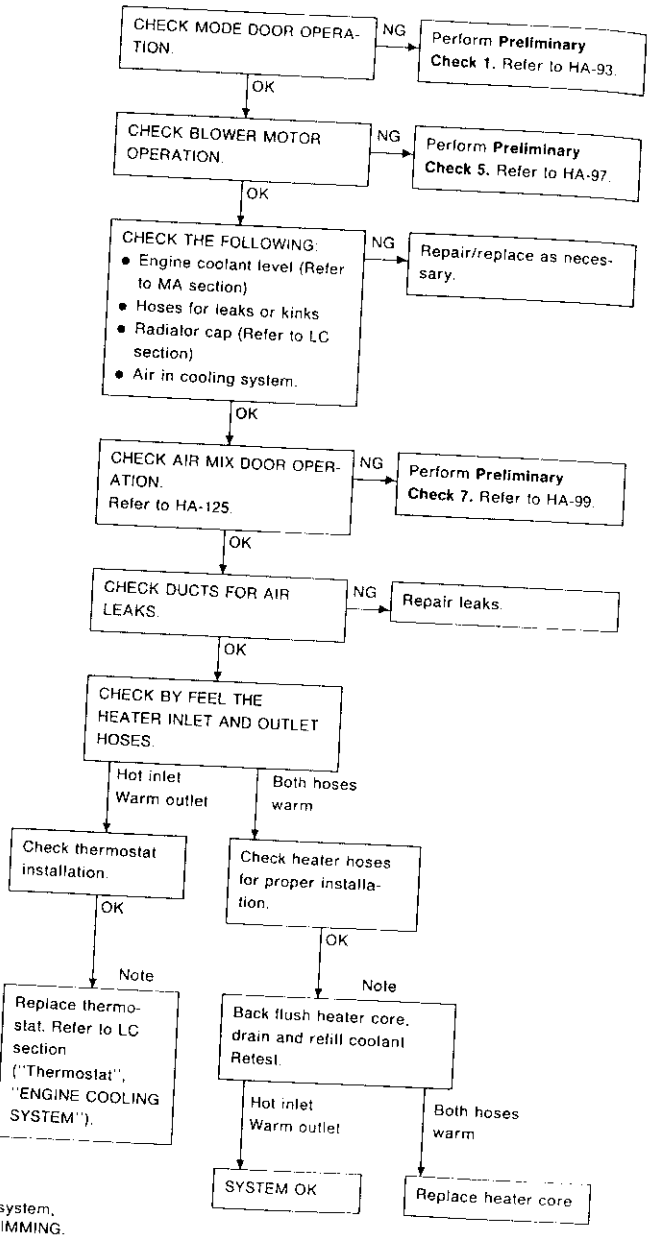

Note: To avoid unnecessary service of heating system, first perform TEMPERATURE SETTING TRIMMING. Refer to "AUXILIARY MECHANISM", "Self-diagnosis"

PRELIMINARY CHECK 5

Blower motor operation is malfunctioning.

- **Perform Self-diagnosis STEP 1 before referring to the following flow chart.**

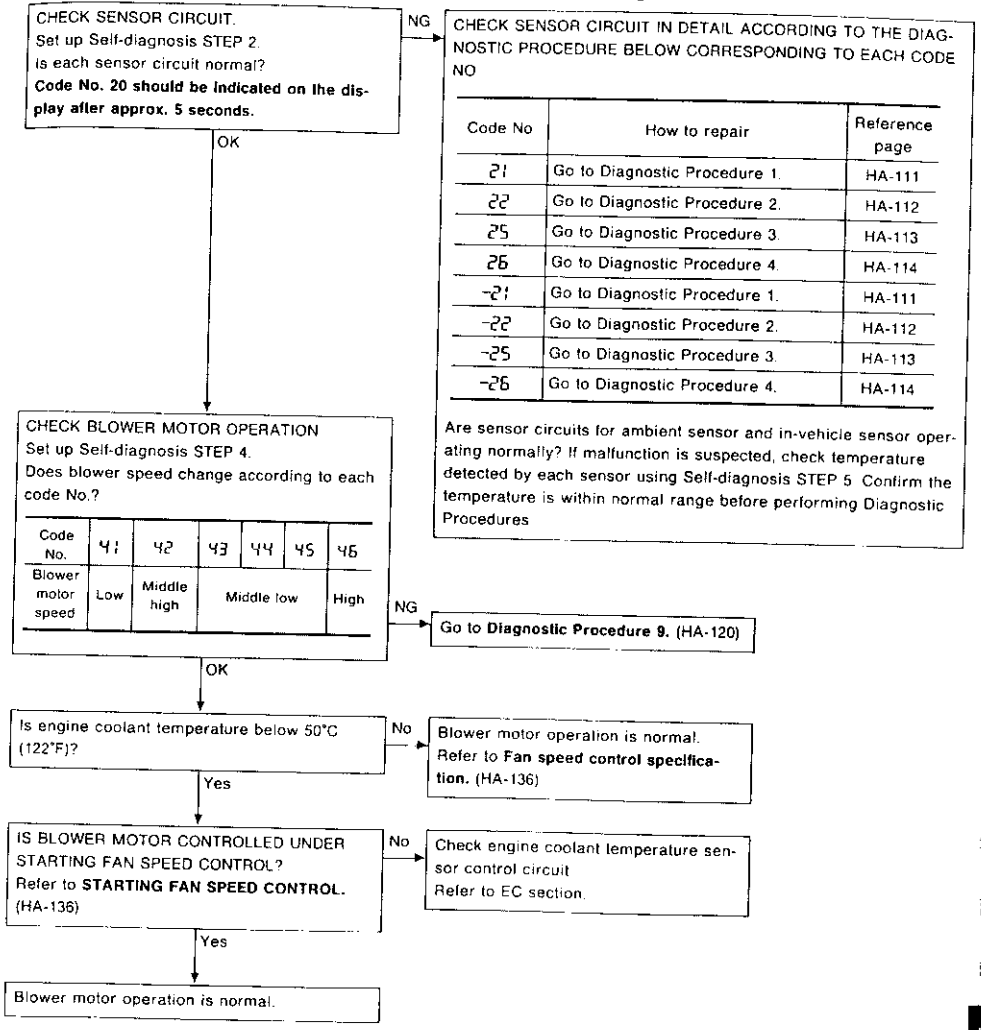

PRELIMINARY CHECK 6

Magnet clutch does not engage.
Perform Self-diagnosis STEP 1 before referring to the following flow chart.

CHECK SENSOR CIRCUIT.
Set up Self-diagnosis STEP 2.
Is each sensor circuit normal?
Code No. 20 should be indicated on the display after approx. 5 seconds.

NG → CHECK SENSOR CIRCUIT IN DETAIL ACCORDING TO THE DIAGNOSTIC PROCEDURE BELOW CORRESPONDED TO EACH CODE NO.

Code No	How to repair	Reference page
21	Go to Diagnostic Procedure 1.	HA-111
22	Go to Diagnostic Procedure 2.	HA-112
25	Go to Diagnostic Procedure 5.	HA-113
26	Go to Diagnostic Procedure 6.	HA-114
-21	Go to Diagnostic Procedure 1.	HA-111
-22	Go to Diagnostic Procedure 2.	HA-112
-25	Go to Diagnostic Procedure 5.	HA-113
-26	Go to Diagnostic Procedure 6.	HA-114

Are sensor circuits for ambient sensor and in-vehicle sensor operating normally? If malfunction is suspected, check temperature detected by each sensor using Self-diagnosis STEP 5. Confirm the temperature is within normal range before performing Diagnostic Procedures.

OK ↓

CHECK MAGNET CLUTCH OPERATION.
Set up Self-diagnosis STEP 4.
Does magnet clutch operate according to each code No.?

Code No.	41	42	43	44	45	46
Compressor	ON	ON	ON	OFF	OFF	ON

NG → CHECK REFRIGERANT.
Connect manifold gauge, then check system pressure.
NG → Check refrigerant leaks.

OK ↓

Go to **Diagnostic Procedure 10.** (HA-122)

OK ↓

Magnet clutch control system is normal.
Refer to MAGNET CLUTCH CONTROL. (HA-137)

PRELIMINARY CHECK 7

Discharged air temperature does not change.
Perform Self-diagnosis STEP 1 before referring to the following flow chart.

CHECK SENSOR CIRCUIT
Set up Self-diagnosis STEP 2.
Is each sensor circuit normal?
Code No. 20 should be indicated on the display after approx. 5 seconds later.

NG → CHECK SENSOR CIRCUIT IN DETAIL ACCORDING TO THE DIAGNOSTIC PROCEDURE BELOW CORRESPONDING TO EACH CODE NO.

Code No.	How to repair	Reference page
21	Go to Diagnostic Procedure 1.	HA-111
22	Go to Diagnostic Procedure 2.	HA-112
25	Go to Diagnostic Procedure 3.	HA-113
26	Go to Diagnostic Procedure 4.	HA-114
-21	Go to Diagnostic Procedure 1.	HA-111
-22	Go to Diagnostic Procedure 2.	HA-112
-25	Go to Diagnostic Procedure 3.	HA-113
-26	Go to Diagnostic Procedure 4.	HA-114

Are sensor circuits for ambient sensor and in-vehicle sensor operating normally? If malfunction is suspected, check temperature detected by each sensor using Self-diagnosis STEP 5. Confirm the temperature is within normal range before performing Diagnostic Procedures.

OK ↓

CHECK AIR MIX DOOR OPERATION.
Set up Self-diagnosis STEP 4.
Does discharged air temperature change according to each code No.?

41	42	43	44	45	46
Full cold		Full hot			

OK ↓

Air mix door control system is normal.
Refer to **Air mix door control specification.** (HA-131)

NG →

CHECK AIR MIX DOOR MECHANISM.
Refer to CONTROL LINKAGE ADJUSTMENT. (HA-125)

NG → Repair or adjust

OK ↓

Go to **Diagnostic Procedure 7.** (HA-118)

Preliminary Check (Cont'd)

PRELIMINARY CHECK 8

Noise

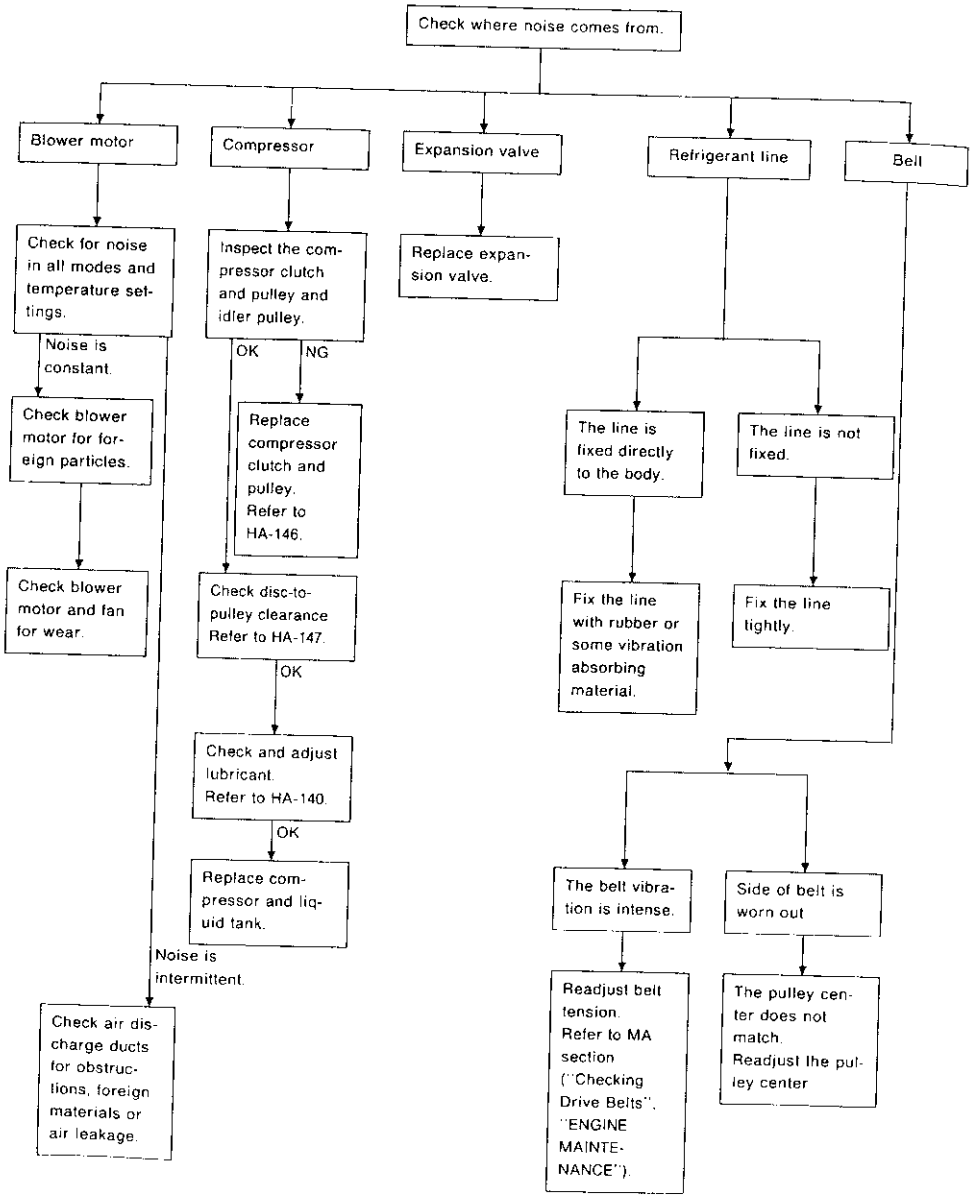

Harness Layout

Engine compartment

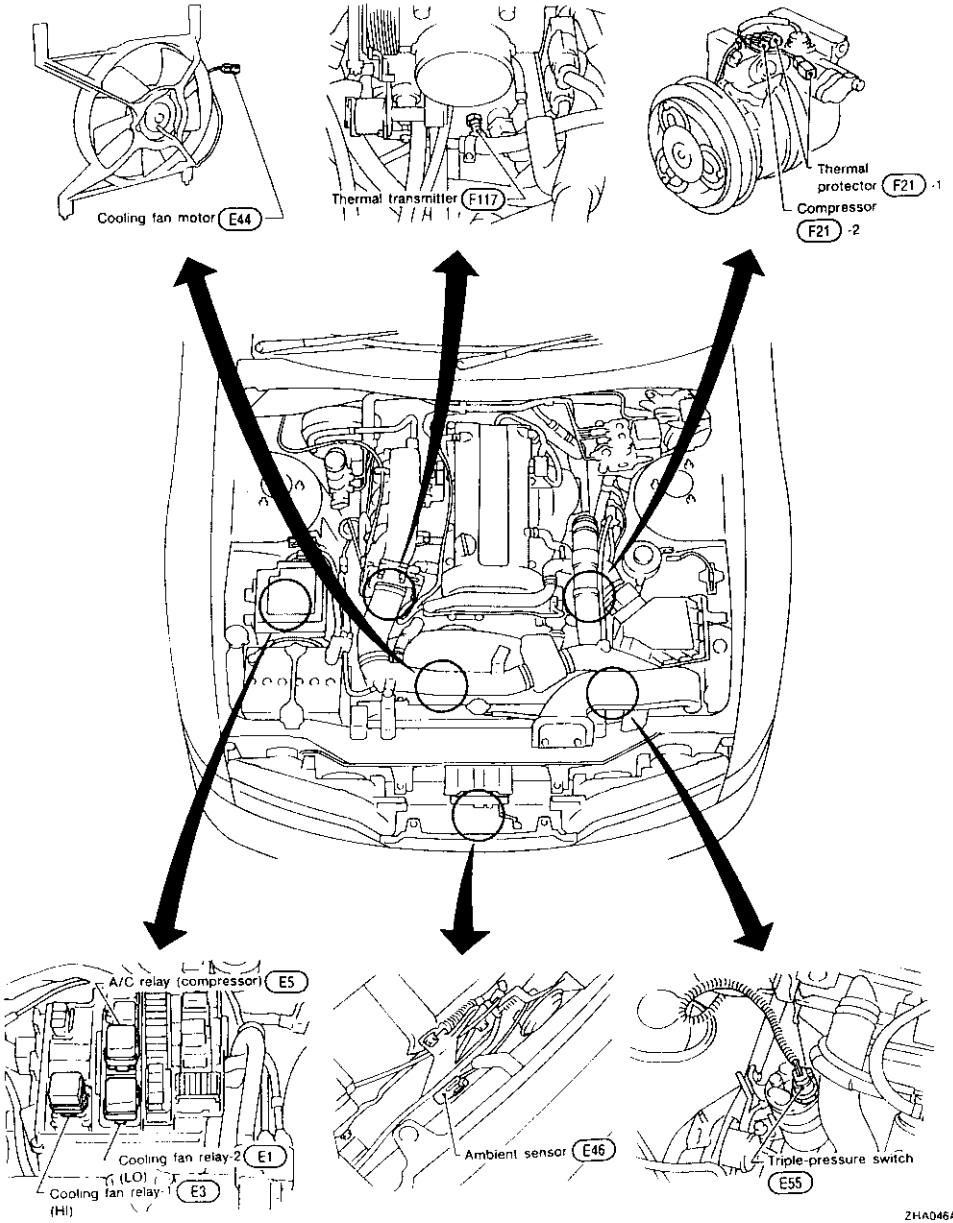

Harness Layout (Cont'd)

Passenger compartment

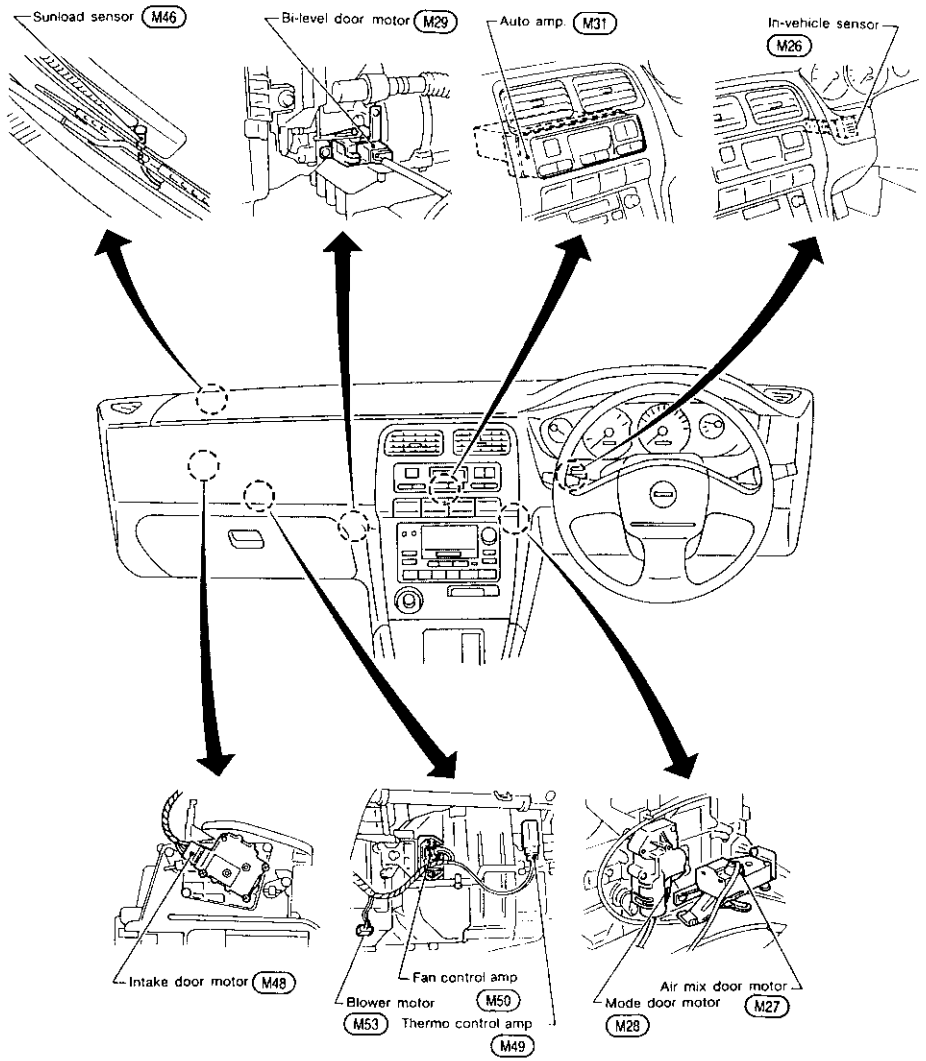

ZHA047A

Circuit Diagram

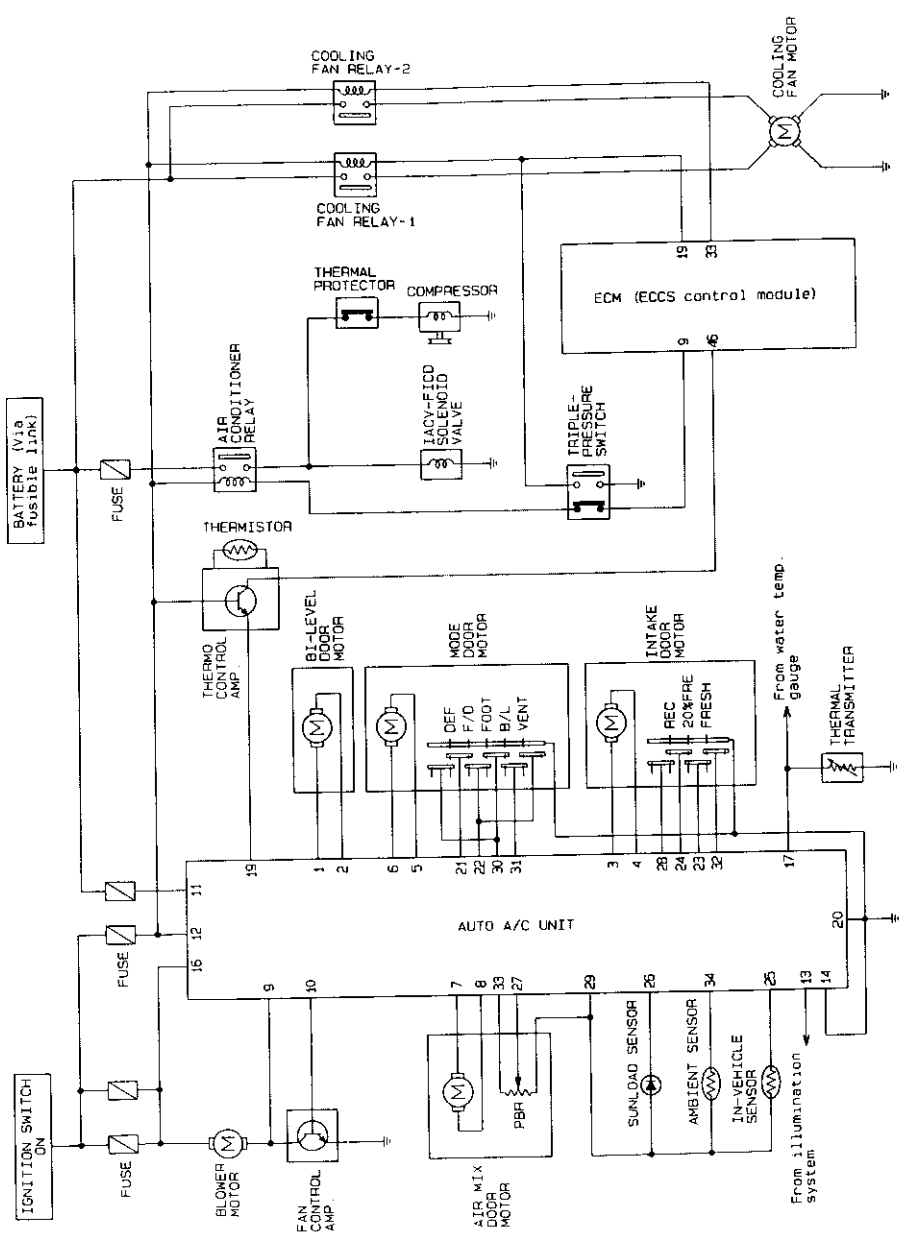

SHA467E

Wiring Diagram — A/C, A —

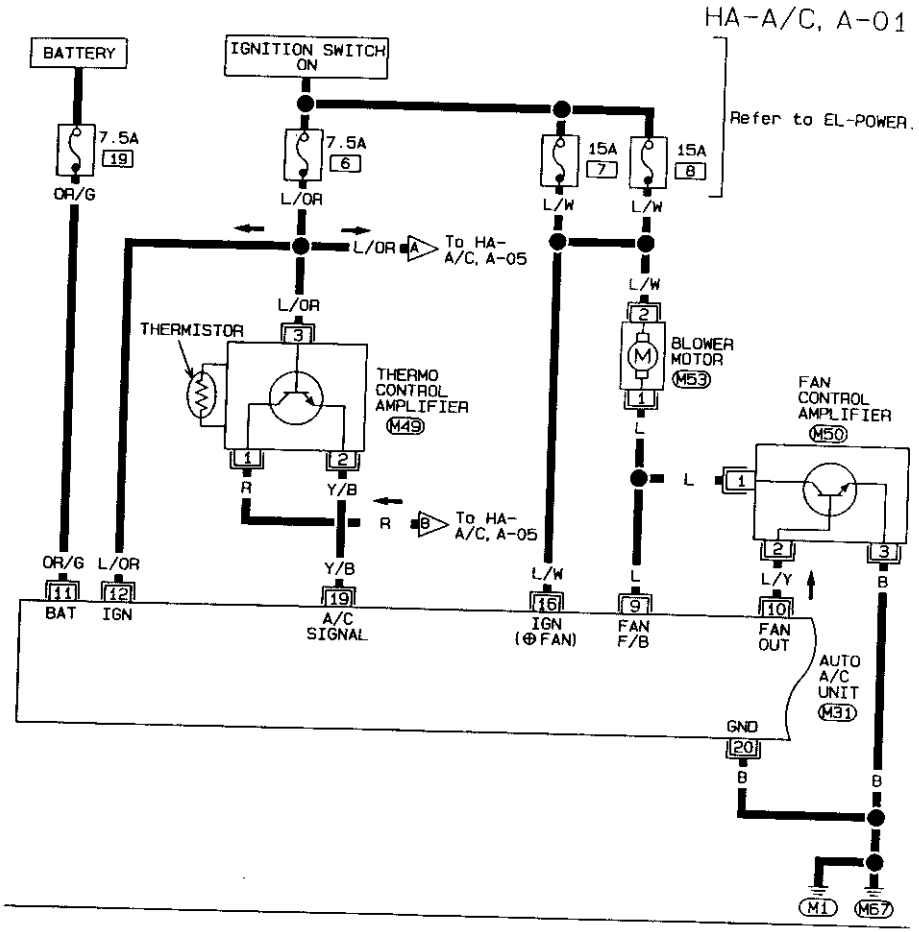

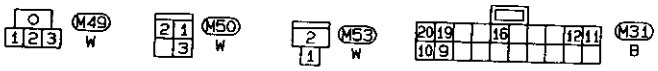

SHA468E

Wiring Diagram — A/C, A — (Cont'd)

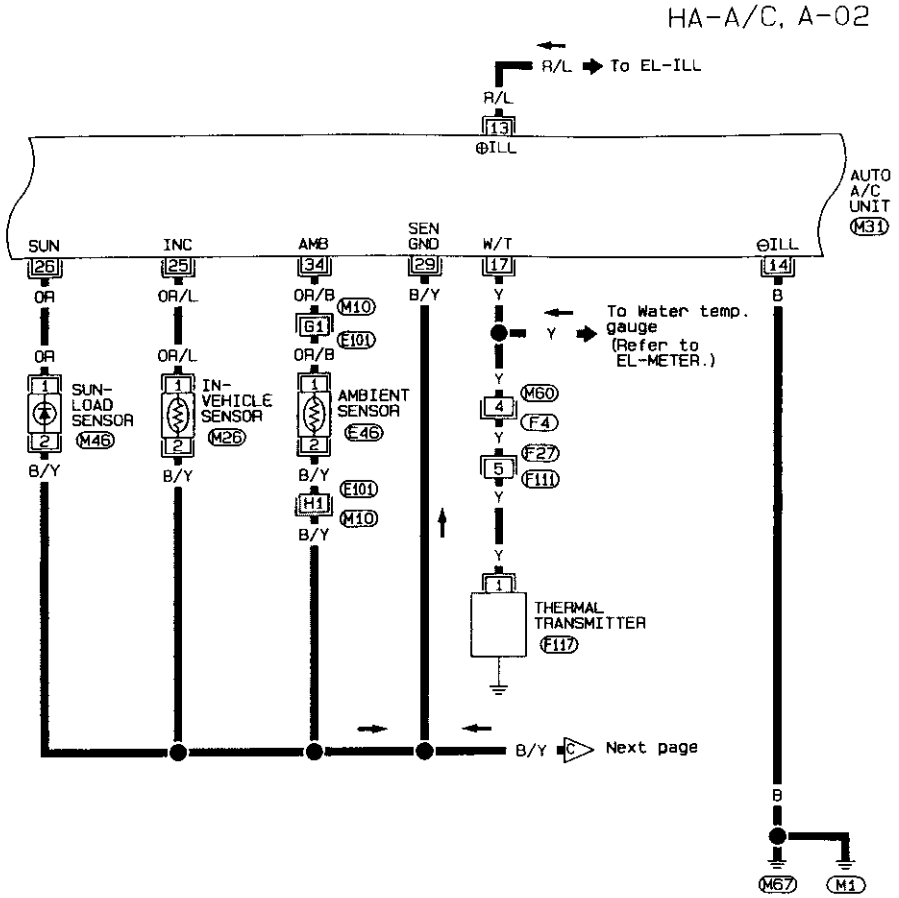

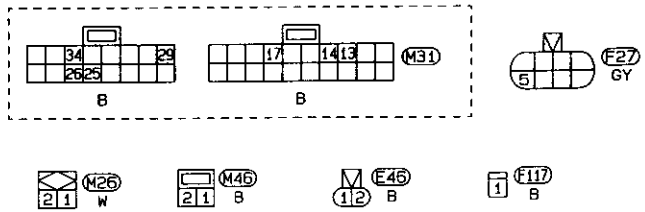

Refer to last page (Foldout page).
M10, E101
M60, F4

SHA469E

HA-A/C, A-03

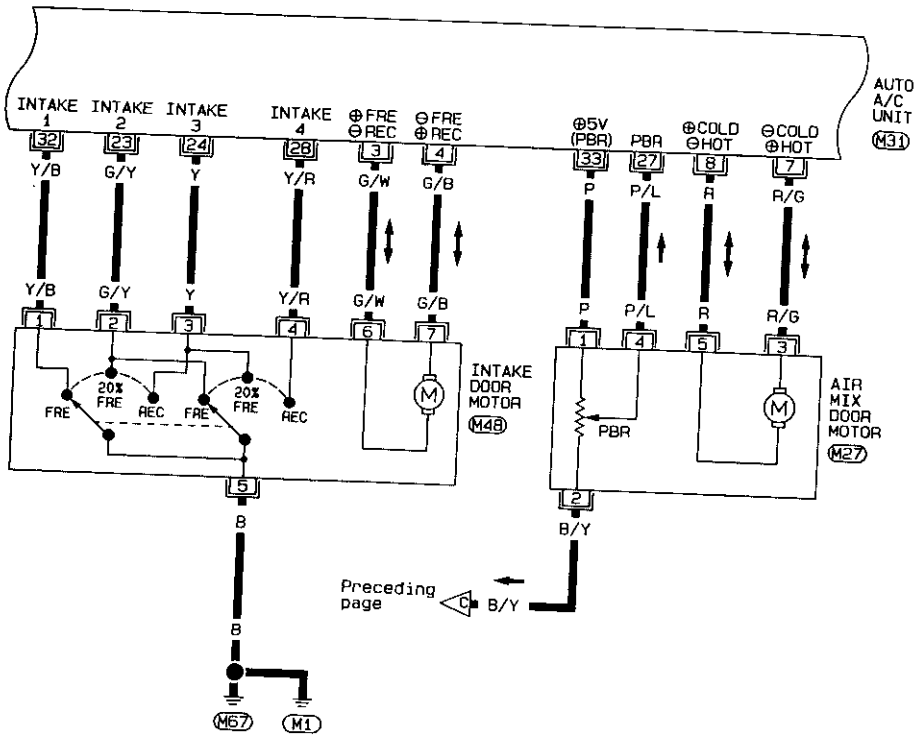

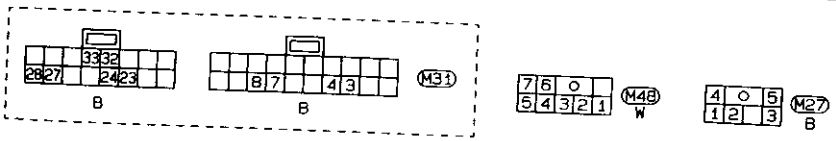

SHA470E

HA-A/C, A-04

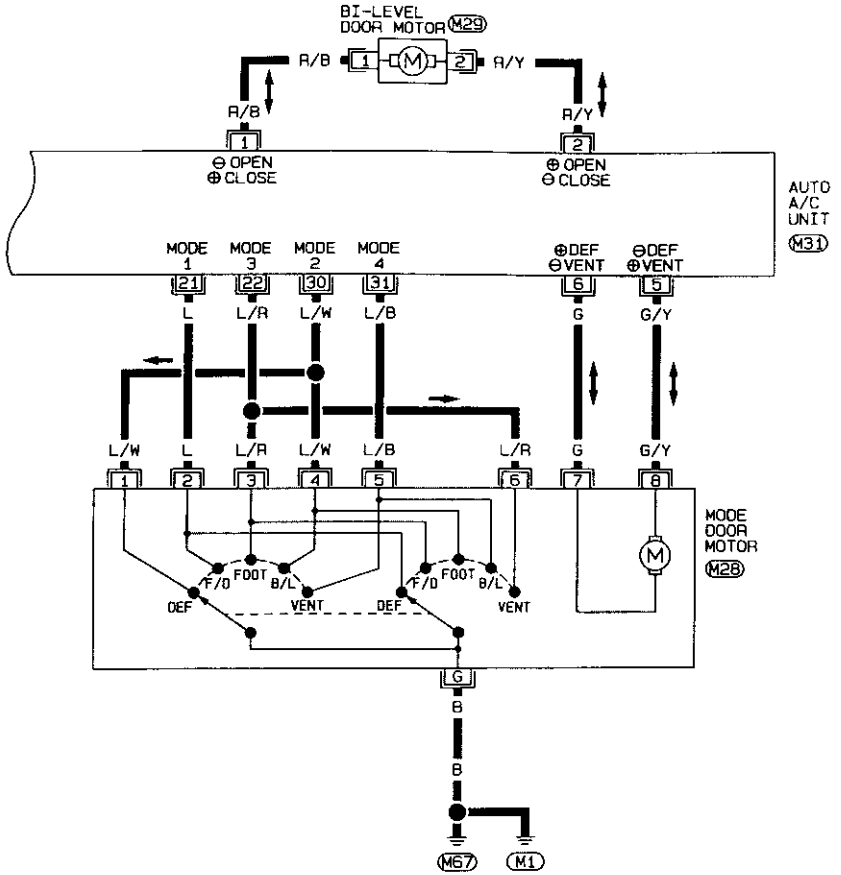

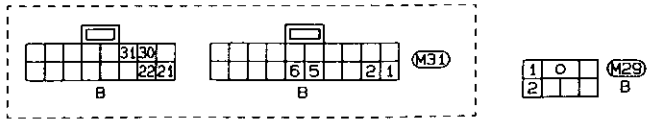

SHA471E

Wiring Diagram — A/C, A — (Cont'd)

HA-A/C, A-05

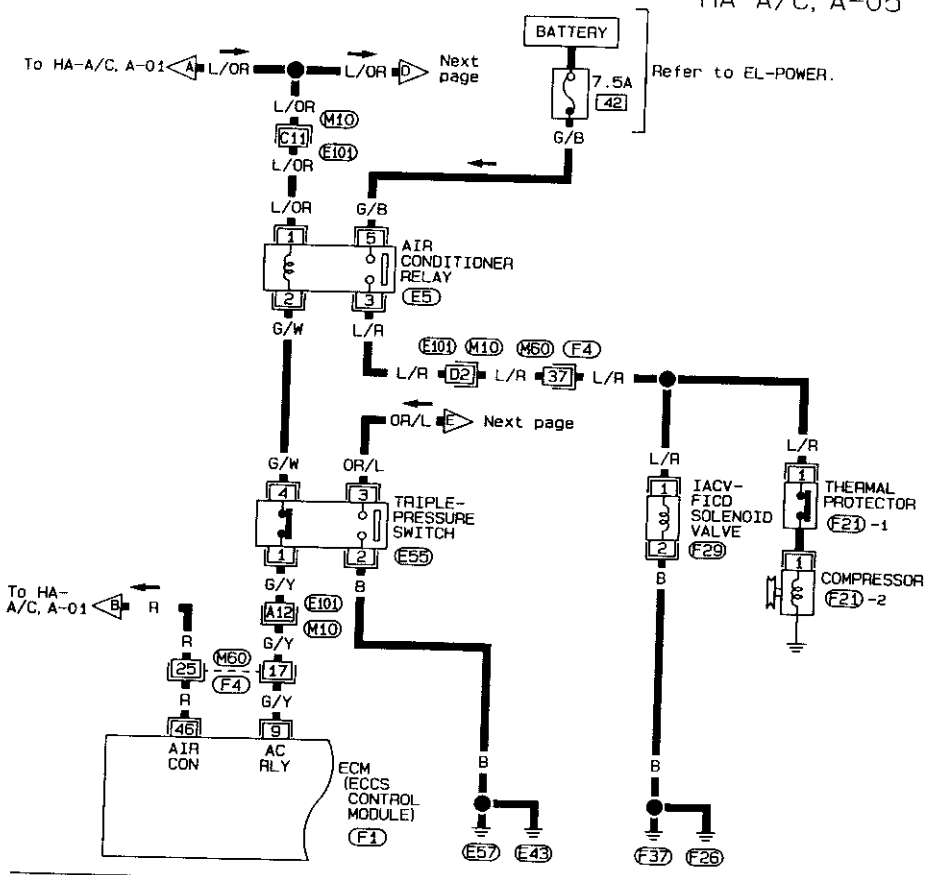

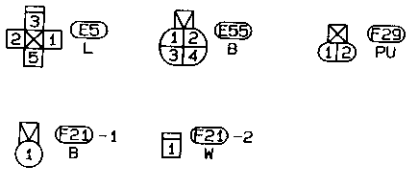

Refer to last page (Foldout page).

M10, E101

M60, F4

F1

SHA472E

Wiring Diagram — A/C, A — (Cont'd)

HA-A/C, A-06

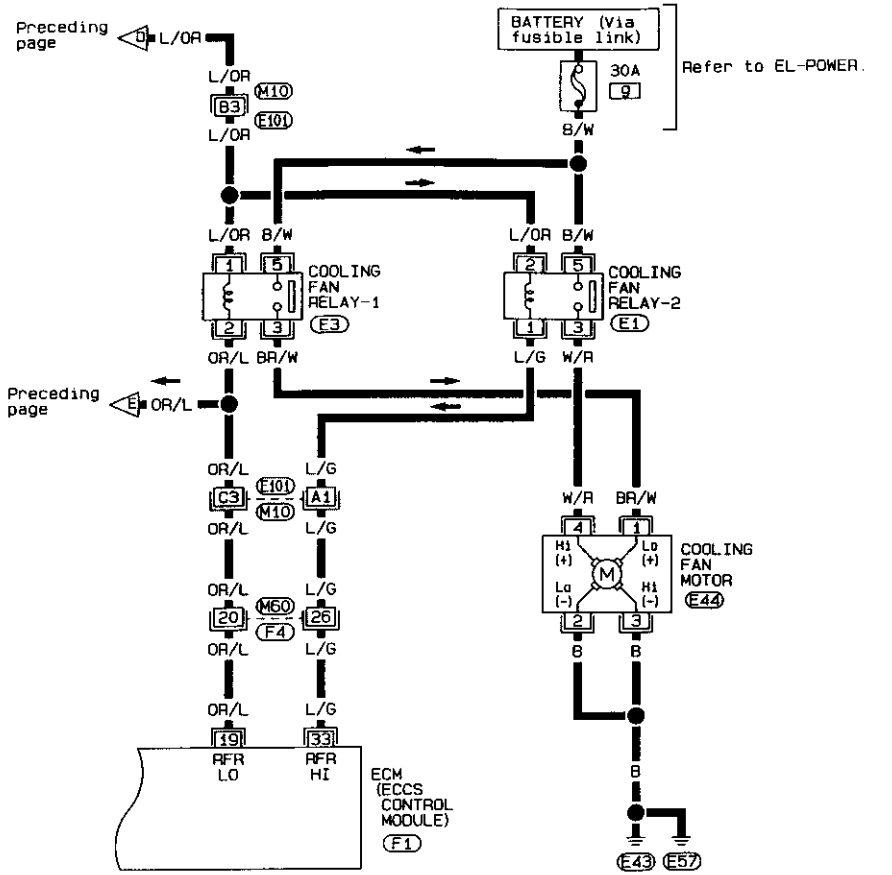

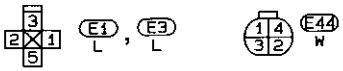

Refer to last page (Foldout page).

M10, E101

M60, F4

F1

SHA473E

Main Power Supply and Ground Circuit Check

POWER SUPPLY CIRCUIT CHECK FOR AUTO A/C SYSTEM

Check power supply circuit for auto air conditioning system. **Refer to "POWER SUPPLY ROUTING" in EL section and Wiring Diagram.**

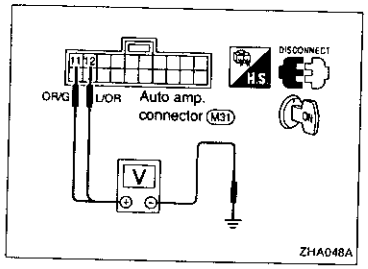

AUTO AMP. CHECK

Check power supply circuit for auto amp. with ignition switch ON.

1. Disconnect auto amp. harness connector.
2. Connect voltmeter from harness side.
3. Measure voltage across terminal ⑪, ⑫ and body ground.

Voltmeter terminal		Voltage
⊕	⊖	
⑪, ⑫	Body ground	Approx. 12V

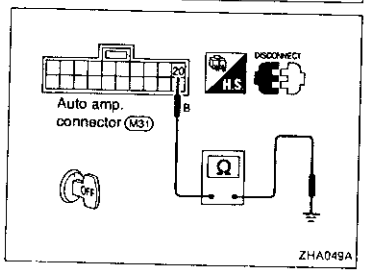

Check body ground circuit for auto amp. with ignition switch OFF.

1. Disconnect push control unit harness connector.
2. Connect ohmmeter from harness side.
3. Check for continuity between terminal ⑳ and body ground.

Ohmmeter terminal		Continuity
⊕	⊖	
⑳	Body ground	Yes

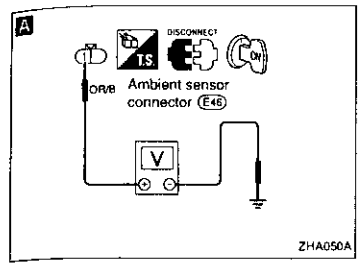

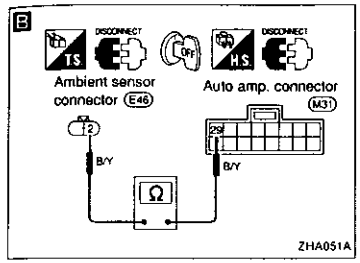

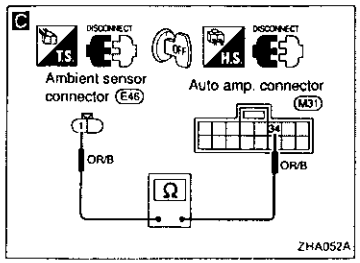

Diagnostic Procedure 1

SYMPTOM: Ambient sensor circuit is open or shorted. (21 or −21 is indicated on display as a result of conducting Self-diagnosis STEP 2.)

A

CHECK AMBIENT SENSOR CIRCUIT BETWEEN AMBIENT SENSOR AND AUTO AMP.
Disconnect ambient sensor harness connector
Do approx. 5 volts exist between ambient sensor harness terminal ① and body ground?

No → Disconnect auto amp. harness connector.

C Note

Check circuit continuity between ambient sensor harness terminal ① and auto amp. harness terminal ㊹.

OK → Replace auto amp.

Yes → Disconnect auto amp. harness connector.

B Note

Check circuit continuity between ambient sensor harness terminal ② and auto amp. harness terminal ㉙.

OK → CHECK AMBIENT SENSOR. (Refer to Control System Input Components.) (HA-129)

NG → Replace ambient sensor.

OK → Replace auto amp.

Note:
If the result is NG after checking circuit continuity, repair harness or connector.

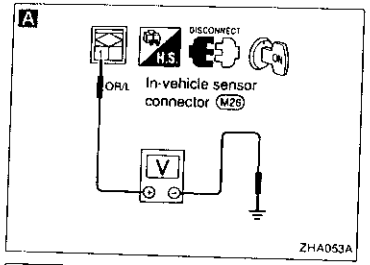

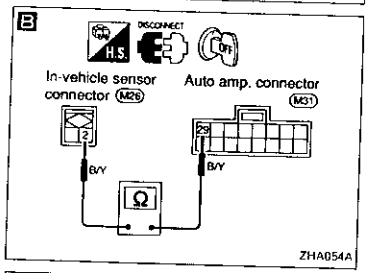

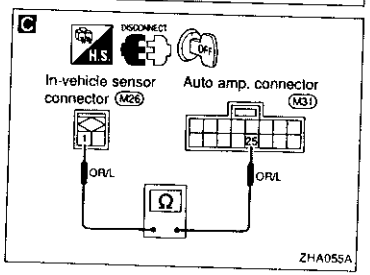

Diagnostic Procedure 2

SYMPTOM: In-vehicle sensor circuit is open or shorted. (22 or −22 is indicated on display as a result of conducting Self-diagnosis STEP 2.)

A

CHECK IN-VEHICLE SENSOR CIRCUIT BETWEEN IN-VEHICLE SENSOR AND AUTO AMP.
Disconnect in-vehicle sensor harness connector.
Do approx. 5 volts exist between in-vehicle sensor harness terminal ① and body ground?

No → Disconnect auto amp. harness connector

C Note: Check circuit continuity between in-vehicle sensor harness terminal ① and auto amp. harness terminal 25.

OK → Replace auto amp.

Yes → Disconnect auto amp. harness connector.

B Note: Check circuit continuity between in-vehicle sensor harness terminal ② and auto amp. harness terminal 29.

OK → CHECK IN-VEHICLE SENSOR. (Refer to Control System Input Components.) (HA-128)

NG → Replace in-vehicle sensor.

OK → Replace auto amp.

Note:
If the result is NG after checking circuit continuity, repair harness or connector.

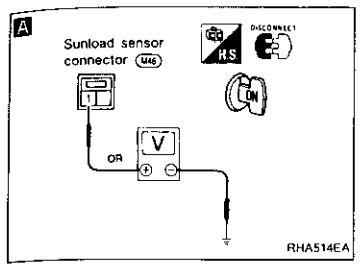

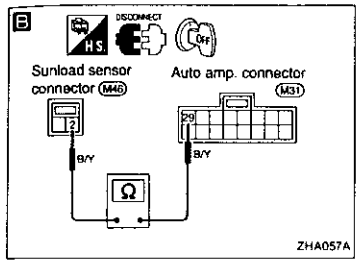

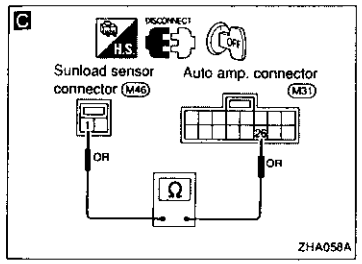

Diagnostic Procedure 3

SYMPTOM: Sunload sensor circuit is open or shorted. (25 or −25 is indicated on display as a result of conducting Self-diagnosis STEP 2.)

A

CHECK SUNLOAD SENSOR CIRCUIT BETWEEN SUNLOAD SENSOR AND AUTO AMP.
Disconnect sunload sensor harness connector.
Do approx. 5 volts exist between sunload sensor harness terminal ① and body ground?

No → Disconnect auto amp. harness connector.

C Note: Check circuit continuity between sunload sensor harness terminal ① and auto amp. harness terminal 26.

OK → Replace auto amp.

Yes → Disconnect auto amp. harness connector.

B Note: Check circuit continuity between sunload sensor harness terminal ② and auto amp. harness terminal 29.

OK → CHECK SUNLOAD SENSOR. (Refer to Control System Input Components.) (HA-129)

NG → Replace sunload sensor.

OK → Replace auto amp.

Note:
If the result is NG after checking circuit continuity, repair harness or connector.

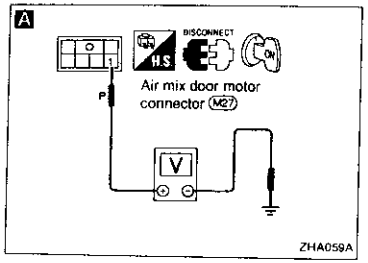

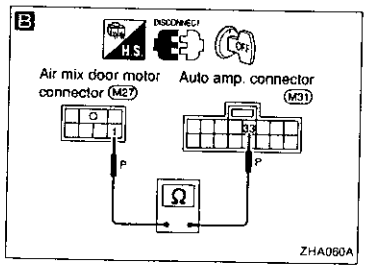

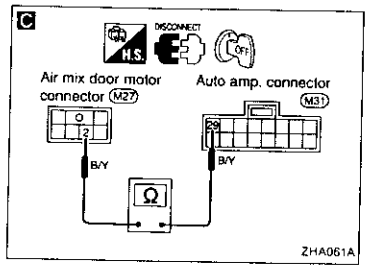

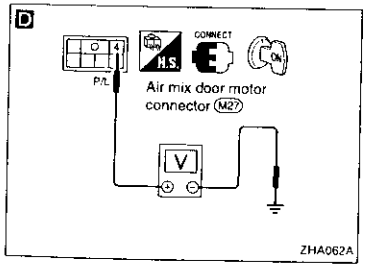

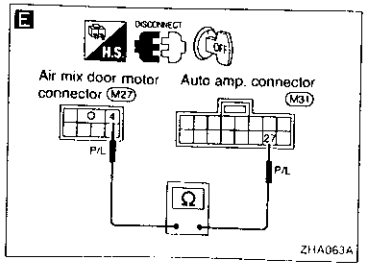

Diagnostic Procedure 4

SYMPTOM: PBR circuit is open or shorted. (25 or −25 is indicated on display as a result of conducting Self-diagnosis STEP 2.)

A

CHECK PBR CIRCUIT BETWEEN PBR AND AUTO AMP.
Disconnect air mix door motor harness connector.
Do approx. 5 volts exist between air mix door motor harness terminal ① and body ground?

No → Disconnect auto amp. harness connector.

B Note

Check circuit continuity between air mix door motor harness terminal ① and auto amp. harness terminal 33.

OK → Replace auto amp.

Yes → Disconnect auto amp. harness connector.

C Note

Check circuit continuity between air mix door motor harness terminal ② and auto amp. harness terminal 29.

OK

D

CHECK PBR CIRCUIT BETWEEN PBR AND AUTO AMP.
1. Reconnect auto amp. harness connector and air mix door harness connector.
2. Set temperature switch to full hot 32°C (90°F) with ignition switch ON.
3. Do approx. 4.5 volts exist between air mix door motor harness terminal ④ and body ground?

Yes → Disconnect auto amp. harness connector and air mix door harness connector.

E Note

Check circuit continuity between air mix door motor harness terminal ④ and auto amp. harness terminal 27.

OK → Replace auto amp.

No → CHECK PBR.
(Refer to Control System Output Components.) (HA-132)

NG → Replace air mix door motor (PBR).

OK → Replace auto amp

Note:
If the result is NG after checking circuit continuity, repair harness or connector.

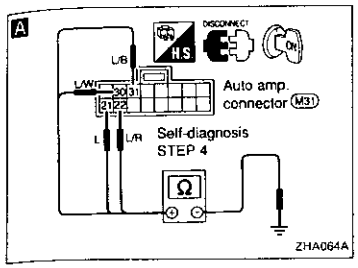

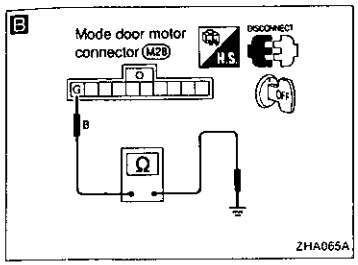

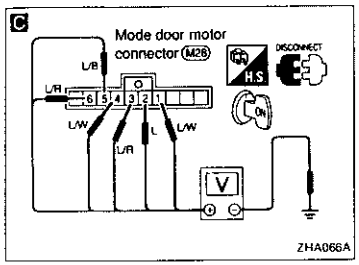

Diagnostic Procedure 5

SYMPTOM: Mode door motor does not operate normally.

- **Perform Self-diagnosis STEPS 1 to 4 before referring to the following flow chart.**

A

CHECK MODE DOOR MOTOR POSITION SWITCH.
1. Set up code No. 41 in Self-diagnosis STEP 4.
2. Disconnect auto amp. harness connector after turning ignition switch OFF.
3. Check if continuity exists between terminal 22 or 31 of auto amp. harness connector and body ground.
4. Using above procedure, check for continuity in any other mode, as indicated in chart.

Code No	Condition	Terminal No. ⊕	Terminal No. ⊖	Continuity
41	VENT	22 or 31	Body ground	Yes
42 or 43	B/L	30 or 31		
44	FOOT	22 or 30		
45	F/D	31 or 32		
46	DEF	31 or 30		

NG → Disconnect mode door motor harness connector.

B Note

CHECK BODY GROUND CIRCUIT FOR MODE DOOR MOTOR.
Does continuity exist between mode door motor harness terminal ⑥ and body ground?

OK → Reconnect auto amp. harness connector.

C

CHECK POWER SUPPLY FOR MODE DOOR MOTOR CONTROL CIRCUIT.
Do approx. 5 volts exist between mode door motor harness terminals and body ground?

Terminal No. ⊕	Terminal No. ⊖	Voltage
①	Body ground	Approx. 5V
②		
③		
④		
⑤		
⑥		

Yes → Reconnect mode door motor harness connector.

No → Ⓐ Ⓑ (Go to next page.)

INSPECTION END

Note:
If the result is NG after checking circuit continuity, repair harness or connector.

Diagnostic Procedure 5 (Cont'd)

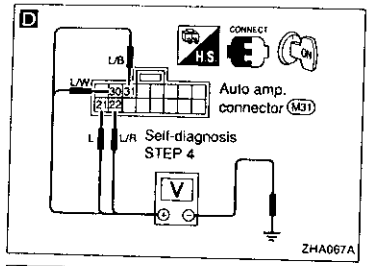

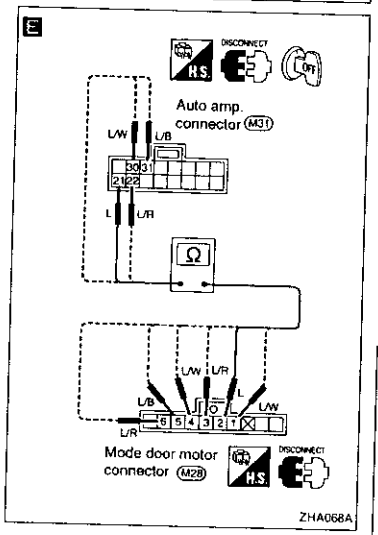

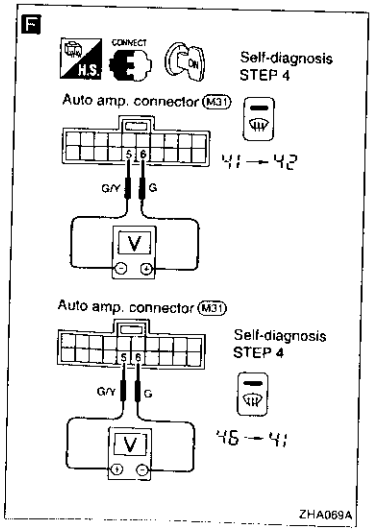

Ⓐ

D CHECK MODE DOOR MOTOR POSITION SWITCH.
Set up Self-diagnosis STEP 4.
Measure voltage across auto amp. harness terminals and body ground.

Code No	Condition	Terminal No. ⊕ ㉛	㉜	㉘	㉙	Terminal No. ⊖
41	VENT	5V	0V	5V	0V	Body ground
42 or 43	B/L	5V	5V	0V	0V	
44	FOOT	5V	0V	0V	5V	
45	F/D	0V	0V	5V	5V	
46	DEF	0V	5V	0V	5V	

0V: Approx. 0V
5V: Approx. 5V

OK → **F**
NG → Replace mode door motor.

Ⓑ

E Note
Check circuit continuity between each terminal on auto amp. and on mode door motor.

Terminal No. ⊕ Auto amp.	Terminal No. ⊖ Mode door motor	Continuity
㉑	②	Yes
㉒	③ or ⑤	
㉚	① or ④	
㉛	⑤	

OK → Replace auto amp.

F CHECK FOR OUTPUT OF AUTO AMP.
Do approx. 10.5 volts exist between auto amp. harness terminals ⑥ and ⑤ when code No. is switched from "41" to "42" or when code No. is switched from "46" to "41"?
No → Replace auto amp.

Code No.	Mode door motor operation	Terminal No. ⑥	⑤	Voltage V
41 → 42	VENT → B/L	⊕	⊖	Approx. 10.5
46 → 41	DEF → VENT	⊖	⊕	
–	Stop	–	–	0

Yes → Replace mode door motor.

Note:
If the result is NG after checking circuit continuity, repair harness or connector.

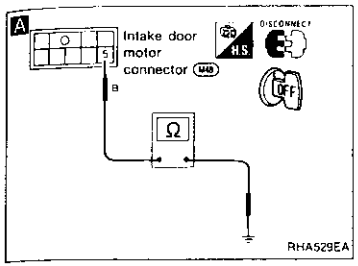

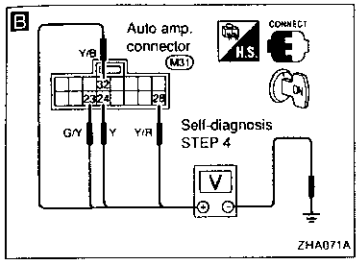

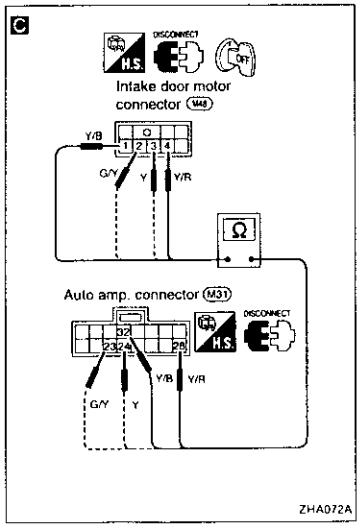

Diagnostic Procedure 6

SYMPTOM: Intake door motor does not operate normally.

- **Perform Self-diagnosis STEPS 1, 2 and 4 before referring to the flow chart.**

A Note
CHECK BODY GROUND CIRCUIT FOR INTAKE DOOR MOTOR.
Disconnect intake door motor harness connector.
Does continuity exist between intake door motor harness terminal ⑤ and body ground?

Yes → **B**

B CHECK FOR AUTO AMP. OUTPUT.
Set up Self-diagnosis STEP 4.
Measure voltage across auto amp. harness terminals and body ground

Code No.	Terminal No. ⊕	⊖	Condition	Voltage V
41, 42	㉓ or ㉜	Body ground	REC	5
	㉔ or ㉘			0
43	㉘ or ㉜		20% FRE	5
	㉓ or ㉔			0
44, 45, 46	㉔ or ㉘		FRE	5
	㉓ or ㉜			0

0V: Approx. 0V
5V: Approx. 5V

OK → Replace intake door motor.

NG → **C** Note
Check circuit continuity between each terminal on auto amp. and on intake door motor.

Terminal No. Auto amp.	Intake door motor	Continuity
㉜	①	Yes
㉓	②	
㉔	③	
㉘	④	

OK → Replace auto amp.

Note:
If the result is NG after checking circuit continuity, repair harness or connector.

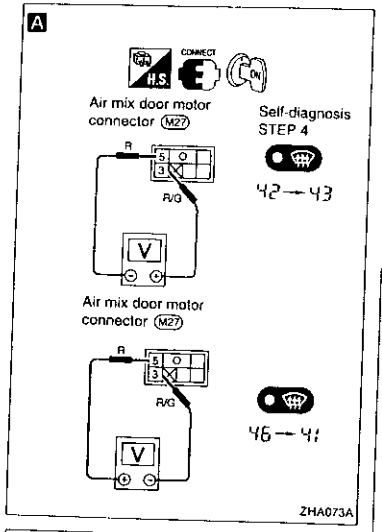

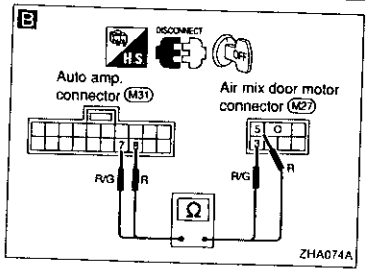

Diagnostic Procedure 7

SYMPTOM: Air mix door motor does not operate normally.

- **Perform Self-diagnosis STEPS 1, 2 and 4 before referring to the following flow chart.**

IS PBR OPERATING NORMALLY?
Refer to Self-diagnoses STEP 2.
No → CHECK PBR CIRCUIT. Go to Diagnostic Procedure 4. (HA-114)
Yes ↓

A

CHECK FOR OUTPUT OF AUTO AMP.
Set up Self-diagnosis STEP 4.
Do approx. 10.5 volt exist between air mix door motor harness terminals ③ and ⑤ when code No. is switched from "42" to "43" or when code No. is switched from "46" to "41"?
No → Disconnect auto amp. and air mix door motor harness connectors.

Code No.	Air mix door operation	Terminal No. ③	Terminal No. ⑤	Voltage V
42 → 43	Cold → Hot	⊕	⊖	Approx. 10.5
46 → 41	Hot → Cold	⊖	⊕	Approx. 10.5
–	Stop	–	–	0

Yes ↓

B

Note: Check circuit continuity between auto amp. harness terminal ⑦ (⑧) and air mix door motor harness terminal ③ (⑤).
OK → Replace auto amp.

Replace air mix door motor.

Note:
If the result is NG after checking circuit continuity, repair harness or connector.

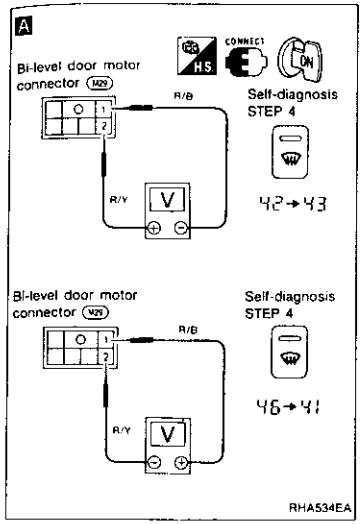

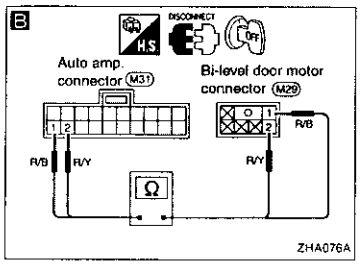

Diagnostic Procedure 8

SYMPTOM: Bi-level (B/L) door motor does not operate normally.

- **Perform Self-diagnosis STEP 4 before referring to the following flow chart.**

A

CHECK FOR AUTO AMP. OUTPUT.
Set up Self-diagnosis STEP 4.
Do approx. 12 volts exist between B/L door motor harness terminals ① and ② when code No. is switched from "42" to "43" or when code No. is switched from "46" to "41"?
Yes → Replace B/L door motor.

Code No	B/L door condition	Terminal No. ①	Terminal No. ②	Voltage V
42 → 43	OPEN → CLOSE	⊕	⊖	Approx. 12
46 → 41	CLOSE → OPEN	⊖	⊕	Approx. 12

No ↓

Disconnect auto amp. harness connector.

B

Note: Check circuit continuity between auto amp. harness terminal ① (②) and bi-level door motor harness terminal ① (②).

Replace auto amp.

Note:
If the result is NG after checking circuit continuity, repair harness or connector.

A

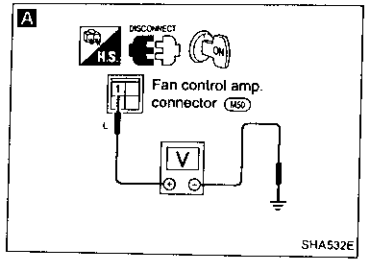

B

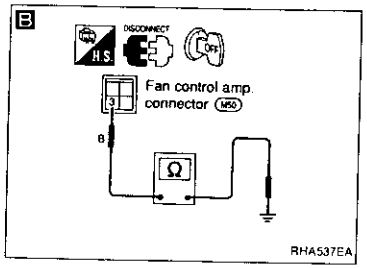

C

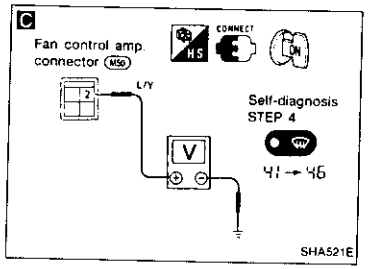

D

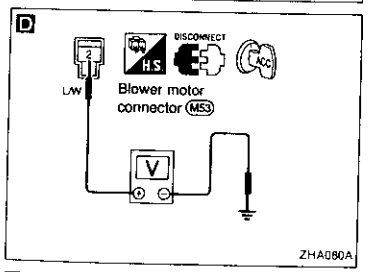

E

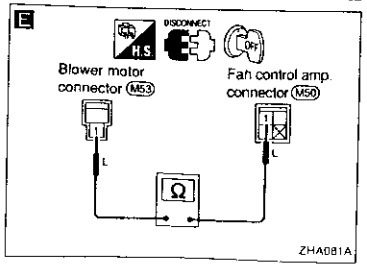

Diagnostic Procedure 9

SYMPTOM: Blower motor operation is malfunctioning under out of Starting Fan Speed Control.

- **Perform Preliminary Check 5 before referring to the following flow chart.**

A
CHECK POWER SUPPLY FOR FAN CONTROL AMP.
Disconnect fan control amp. harness connector.
Do approx. 12 volts exist between fan control amp. harness terminal ① and body ground?
No → **D**
Yes ↓

B
CHECK BODY GROUND CIRCUIT FOR FAN CONTROL AMP.
Note
Does continuity exist between fan control amp. harness terminal ③ and body ground?
Yes ↓
Reconnect fan control amp. harness connector. ↓

C
CHECK FOR OUTPUT OF AUTO AMP.
Set up Self-diagnosis STEP 4.
Measure voltage across fan control amp. harness terminal ② and body ground.

Code No.	Terminal No. ⊕	Terminal No. ⊖	Voltage
41 → 46	②	Body ground	Approx. 2 - 3V

NG → Ⓐ (Go to next page)
OK ↓
Replace fan control amp.

D
CHECK POWER SUPPLY FOR BLOWER MOTOR.
Disconnect blower motor harness connector.
Do approx. 12 volts exist between blower motor harness terminal ② and body ground?
Yes → **E**
No → Check 15A fuses at fuse block. (Refer to "POWER SUPPLY ROUTING" in EL section and Wiring Diagram.)

E
Note
Check circuit continuity between blower motor harness terminal ① and fan control amp. harness terminal ①.
OK ↓
CHECK BLOWER MOTOR. (Refer to Electrical Components Inspection.) (HA-68)
NG ↓
Replace blower motor.

Note:
If the result is NG after checking circuit continuity, repair harness or connector.

Diagnostic Procedure 9 (Cont'd)

F

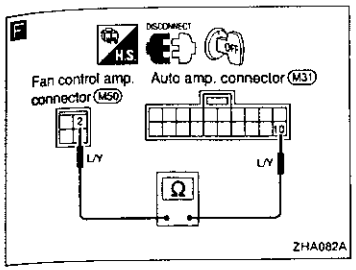

Ⓐ ↓
Disconnect auto amp. and fan control amp. harness connector.

F
Note
Does continuity exist between auto amp harness terminal ⑩ and fan control amp. harness terminal ②?
Yes ↓
Replace auto amp.

Note:
If the result is NG after checking circuit continuity, repair harness or connector.

Diagnostic Procedure 10

SYMPTOM: Magnet clutch does not engage after performing Preliminary Check 6.

- **Perform Preliminary Check 6 before referring to the flow chart.**

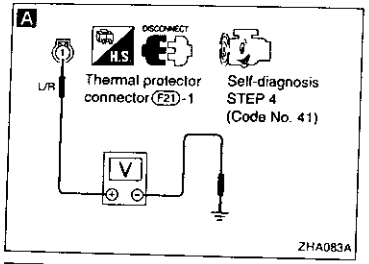

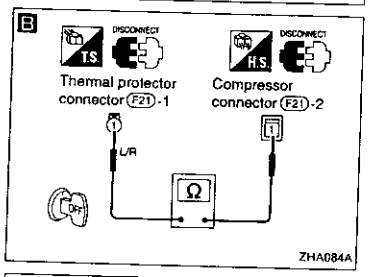

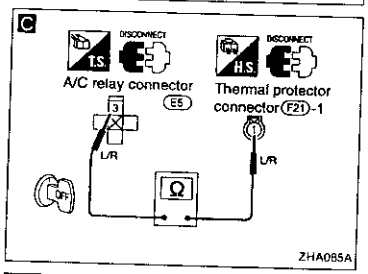

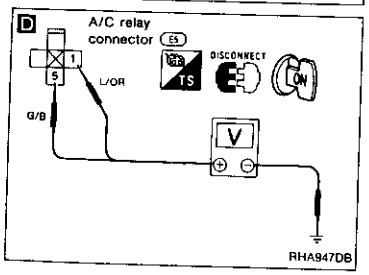

A

CHECK POWER SUPPLY FOR THERMAL PROTECTOR.
1. Disconnect thermal protector harness connector.
2. Set up code No. 41 in Self-diagnosis STEP 4.
3. Do approx. 12 volts exist between thermal protector harness terminal ① and body ground?

No → Disconnect A/C relay harness connector.

Yes → Disconnect compressor harness connector.

B

Check circuit continuity between thermal protector harness terminal ① and compressor harness terminal ①.

Note NG → CHECK THERMAL PROTECTOR. (Refer to Electrical Components Inspection.) (HA-70)

OK → Check magnet clutch, coil continuity.

NG → Replace magnet clutch assembly. Refer to HA-146.

Turn ignition switch OFF to cancel Self-diagnosis STEP 4.

C

Note

Check circuit continuity between A/C relay harness terminal ③ and thermal protector harness terminal ①.

OK → Turn ignition switch OFF to cancel Self-diagnosis STEP 4.

D

CHECK POWER SUPPLY FOR A/C RELAY.
Disconnect A/C relay.
Do approx. 12 volts exist between A/C relay harness terminal ①, ⑤ and body ground?

No → CHECK POWER SUPPLY CIRCUIT AND 7.5A FUSES AT FUSE BLOCK. (Refer to "POWER SUPPLY ROUTING" in EL section and Wiring Diagram.)

Yes → Ⓐ

(Go to next page.)

Note:
If the result is NG after checking circuit continuity, repair harness or connector.

Diagnostic Procedure 10 (Cont'd)

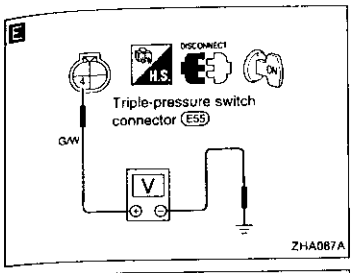

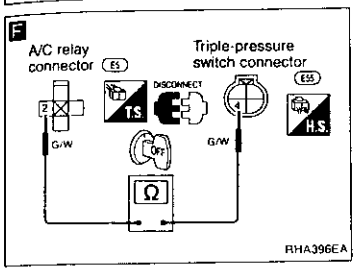

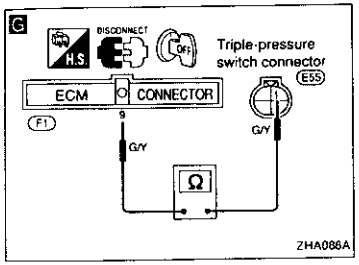

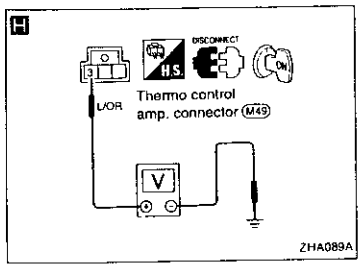

Ⓐ

Reconnect A/C relay.

E

CHECK POWER SUPPLY FOR TRIPLE-PRESSURE SWITCH.
Disconnect triple-pressure switch harness connector.
Do approx. 12 volts exist between triple-pressure switch harness terminal ④ and body ground?

No → **F** Note: Check circuit continuity between A/C relay harness terminal No. ② and triple-pressure switch harness terminal No. ④.

OK → CHECK A/C RELAY. (Refer to Electrical Components Inspection.) (HA-70)

OK → CHECK TRIPLE-PRESSURE SWITCH. (Refer to Electrical Components Inspection.) (HA-69)

NG → Replace triple-pressure switch.

OK → Disconnect ECM (ECCS control module) harness connector.

G

Note

Check circuit continuity between ECM (ECCS control module) harness terminal ⑨ and triple-pressure switch harness terminal ①.

OK → **H**

CHECK POWER SUPPLY FOR THERMO CONTROL AMP.
Disconnect thermo control amp. harness connector.
Do approx. 12 volts exist between thermo control amp. harness terminal ③ and body ground?

No → CHECK POWER SUPPLY CIRCUIT AND 7.5A FUSE AT FUSE BLOCK. (Refer to "POWER SUPPLY ROUTING" in EL section and Wiring Diagram.)

Yes → CHECK THERMO CONTROL AMP. (Refer to Electrical Components Inspection.) (HA-68)

NG → Replace thermo control amp

OK → Ⓑ

(Go to next page.)

Note:
If the result is NG after checking circuit continuity, repair harness or connector.

Diagnostic Procedure 10 (Cont'd)

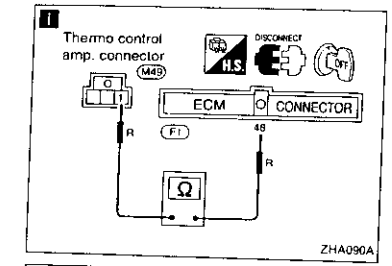

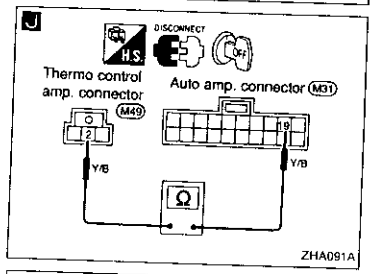

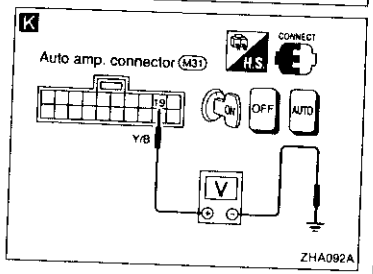

(B)

I

Check circuit continuity between ECM (ECCS control module) harness terminal 46 and thermo control amp. harness terminal ①.

Note

Disconnect auto amp. harness connector.

J

Check circuit continuity between auto amp. harness terminal ⑲ and thermo control amp. harness terminal ②.

Note

Reconnect auto amp. harness connector.

K

CHECK FOR AUTO AMP. OUTPUT.
Measure voltage between auto amp. harness terminal ⑲ and body ground.

NG → Replace auto amp.

Condition	Terminal No. ⊕	Terminal No. ⊖	Voltage
Auto switch ON	⑲	Body ground	Approx. 0V
OFF switch ON	⑲	Body ground	Approx. 12V

OK

CHECK ECM (ECCS CONTROL MODULE).
(Refer to EC section.)

Note:
If the result is NG after checking circuit continuity, repair harness or connector.

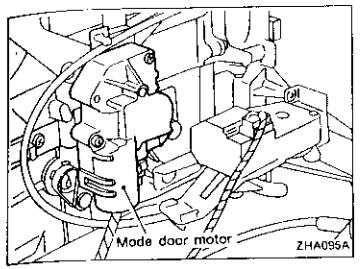

Control Linkage Adjustment

MODE DOOR

1. Install mode door motor on heater unit and connect it to main harness.
2. Set up code No. 45 in Self-diagnosis STEP 4.
3. Make sure mode door operates properly when changing from code No. 41 to 46 by pushing DEF switch.

41	42	43	44	45	46
VENT	B/L	B/L	FOOT	F/D	DEF

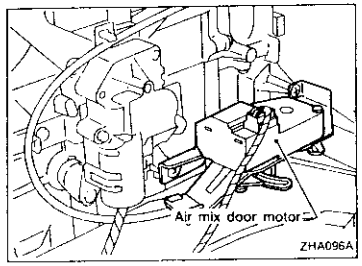

AIR MIX DOOR

1. Install air mix door motor on heater unit and connect it to main harness.
2. Set up code No. 41 in Self-diagnosis STEP 4.
3. Move air mix door lever by hand and hold it in full cold position.
4. Attach air mix door lever to rod holder.
5. Make sure air mix door operates properly when changing from code No. 41 to 46 by pushing DEF switch.

41	42	43	44	45	46
Full cold		Full hot			

Control Linkage Adjustment (Cont'd)

INTAKE DOOR

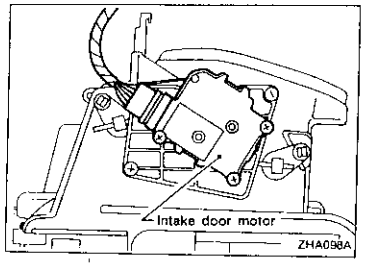

1. Install intake door motor on intake unit and connect it to main harness.
   Make sure lever of intake door motor is fitted in the slit of intake door link.
2. Set up code No. 41 in Self-diagnosis STEP 4.
3. Make sure intake door operates properly when changing from code No. 41 to 46 by pushing DEF switch.

41	42	43	44	45	46
REC		20% FRE	FRE		

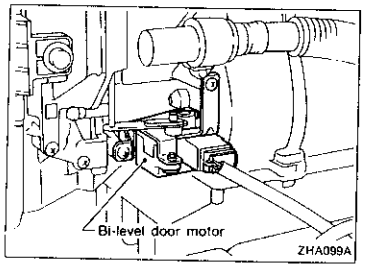

BI-LEVEL DOOR

1. Install Bi-level door motor on cooling unit and connect it to main harness.
   Make sure lever of bi-level door motor is fitted in the slit of bi-level door link.
2. Set up code No. 46 in self-diagnosis STEP 4.
3. Make sure Bi-level door operates properly when changing from code No. 41 to 46 by pushing DEF switch.

41	42	43	44	45	46
OPEN		CLOSE			

Overview of Control System

The control system consists of a) input sensors and switches, b) the auto amp. (microcomputer), and c) outputs. The relationship of these components is shown in the diagram below:

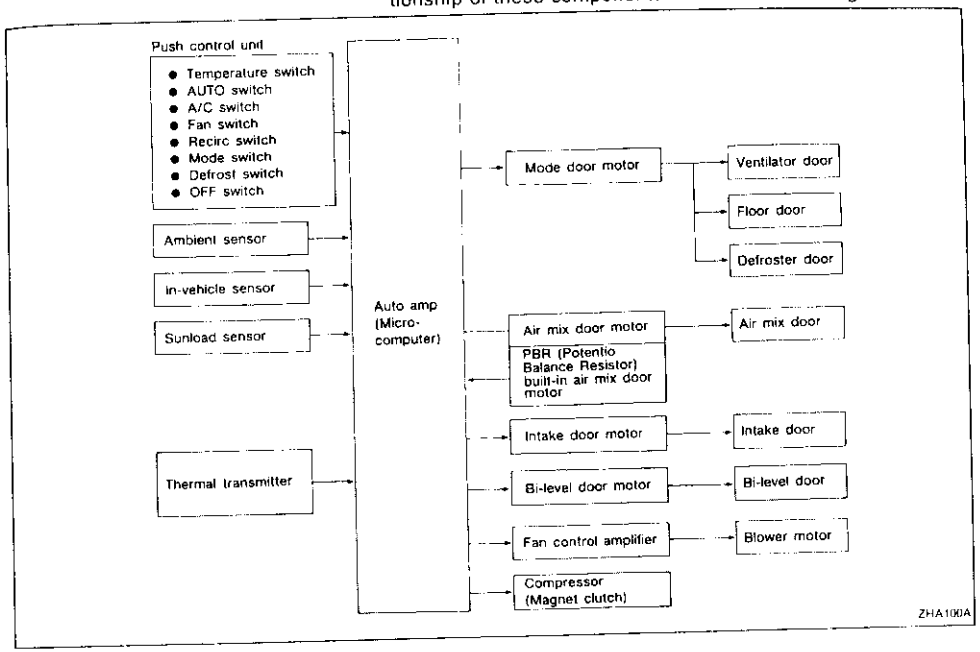

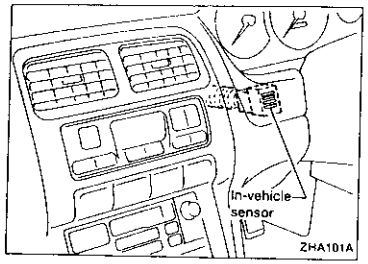

Control System Input Components

POTENTIO TEMPERATURE CONTROL (PTC)

The PTC is built into the auto amp. It can be set at an interval of 1°C (2°F) through both ▲ (HOT) and ▼ (COLD) control switches. Setting temperature is digitally displayed.

IN-VEHICLE SENSOR

The in-vehicle sensor is attached to cluster lid A. It converts variations in temperature of compartment air drawn from an aspirator into a resistance value. It is then input into the auto amp.

After disconnecting in-vehicle sensor harness connector, measure resistance between terminals ① and ② at sensor harness side, using the table below.

Temperature °C (°F)	Resistance kΩ
−15 (5)	12.73
−10 (14)	9.92
−5 (23)	7.80
0 (32)	6.19
5 (41)	4.95
10 (50)	3.99
15 (59)	3.24
20 (68)	2.65
25 (77)	2.19
30 (86)	1.81
35 (95)	1.51
40 (104)	1.27
45 (113)	1.07

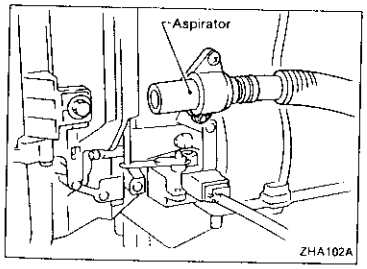

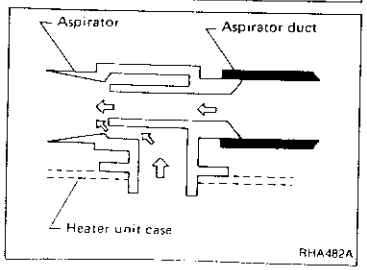

ASPIRATOR

The aspirator is located on heater unit. It produces vacuum pressure due to air discharged from the heater unit, continuously taking compartment air in the aspirator.

Control System Input Components (Cont'd)

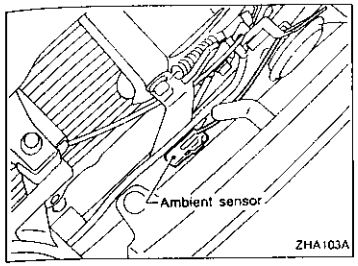

AMBIENT SENSOR

The ambient sensor is attached to the hood rock stay. It detects ambient temperature and converts it into a resistance value which is then input to the auto amp.

After disconnecting ambient sensor harness connector, measure resistance between terminals ① and ② at sensor harness side, using the table below.

Temperature °C (°F)	Resistance kΩ
−15 (5)	12.73
−10 (14)	9.92
−5 (23)	7.80
0 (32)	6.19
5 (41)	4.95
10 (50)	3.99
15 (59)	3.24
20 (68)	2.65
25 (77)	2.19
30 (86)	1.81
35 (95)	1.51
40 (104)	1.27
45 (113)	1.07

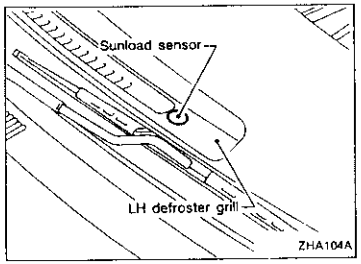

SUNLOAD SENSOR

The sunload sensor is located on the LH defroster grille. It detects sunload entering through windshield by means of a photo diode and converts it into a current value which is then input to the auto amp.

Measure voltage between terminals ① and ② at vehicle harness side, using the table below.

Input current mA	Output voltage V
0	5
0.05	4.2
0.1	3.4
0.15	2.6
0.2	1.8
0.25	1.0

- **When checking sunload sensor, select a place where sun shines directly on it.**

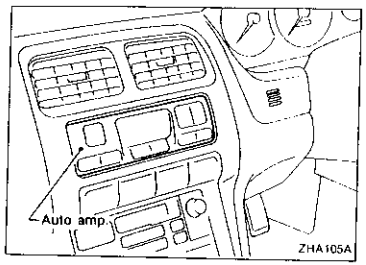

Control System Automatic Amplifier (Auto amp.)

The auto amplifier has a built-in microcomputer which processes information sent from various sensors needed for air conditioning operation. The air mix door motor, mode door motor, intake door motor, bi-level door motor, blower motor and compressor are then controlled.

The auto amp. is unitized with control mechanisms. Signals from various switches are directly entered into auto amplifier. Self-diagnostic functions are also built into auto amp. to provide quick check of malfunctions in the auto air conditioning system.

AMBIENT TEMPERATURE INPUT PROCESS

The auto amp. includes a "processing circuit" for the ambient sensor input. When the ambient temperature increases quickly, the processing circuit controls the input from the ambient sensor. It allows the auto amp. to recognize the increase of temperature only 0.2°C (0.4°F) per 60 seconds.

As an example, consider stopping for a cup of coffee after high speed driving. Even though the ambient temperature has not changed, the ambient sensor will detect the increase of temperature. The heat radiated from the engine compartment can radiate to the front grille area. The ambient sensor is located there.

SUNLOAD INPUT PROCESS

The auto amp. also includes a processing circuit which "average" the variations in detected sunload over a period of time. This prevents drastic swings in the ATC system operation due to small or quick variations in detected sunload.

For example, consider driving along a road bordered by an occasional group of large trees. The sunload detected by the sunload sensor will vary whenever the trees obstruct the sunlight. The processing circuit averages the detected sunload over a period of time. As a result, the effect the above mentioned does not cause any change in the ATC system operation. On the other hand, shortly after entering a long tunnel, the system will recognize the change in sunload, and the system will react accordingly.

Control System Output Components

AIR MIX DOOR CONTROL (Automatic temperature control)

Component parts

Air mix door control system components are:

1) Auto amp.
2) Air mix door motor (PBR)
3) In-vehicle sensor
4) Ambient sensor
5) Sunload sensor

System operation

Temperature set by Potentio Temperature Control (PTC) is compensated through setting temperature correction circuit to determine target temperature.

Auto amp. will operate air mix door motor to set air conditioning system in HOT or COLD position, depending upon relationship between conditions (target temperature, sunload, in-vehicle temperature, and ambient temperature) and conditions (air mix door position and compressor operation).

Control System Output Components (Cont'd)

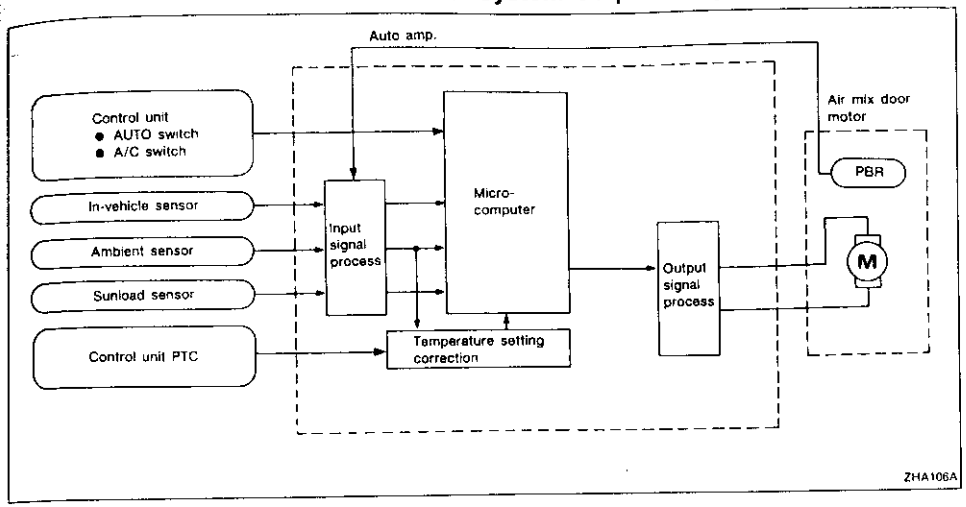

Air mix door control specification

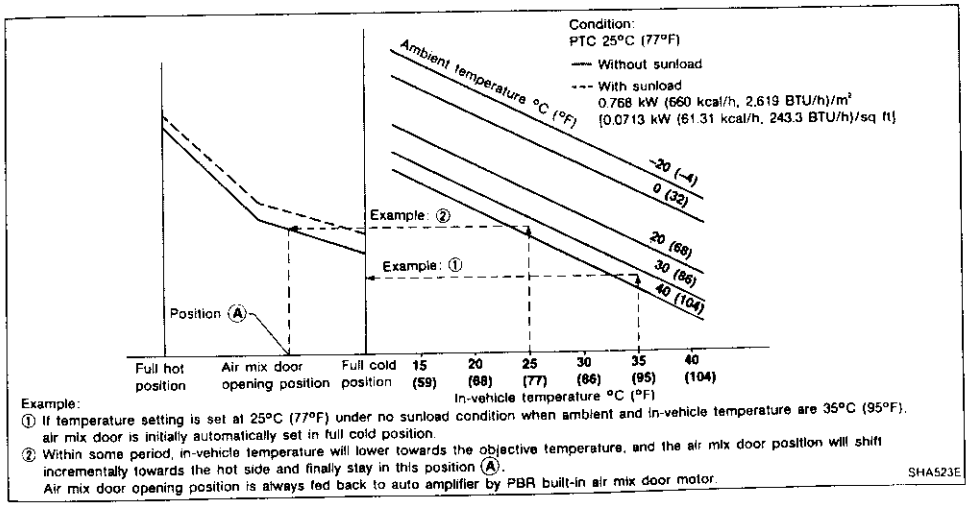

Example:

① If temperature setting is set at 25°C (77°F) under no sunload condition when ambient and in-vehicle temperature are 35°C (95°F), air mix door is initially automatically set in full cold position.

② Within some period, in-vehicle temperature will lower towards the objective temperature, and the air mix door position will shift incrementally towards the hot side and finally stay in this position Ⓐ.
Air mix door opening position is always fed back to auto amplifier by PBR built-in air mix door motor.

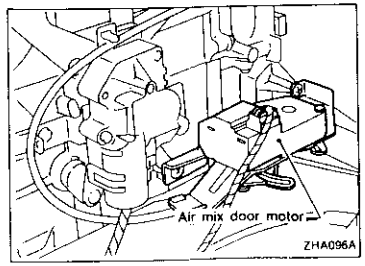

AIR MIX DOOR MOTOR

The air mix door motor is attached to the bottom of the heater unit. It rotates so that the air mix door is opened to a position set by the auto amp. Motor rotation is then conveyed through a shaft and air mix door position is then fed back to the auto amp. by PBR built-in air mix door motor.

Control System Output Components (Cont'd)

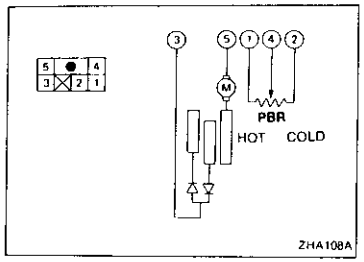

Air mix door operation

3	5	Air mix door operation	Direction of lever movement
⊕	⊖	COLD → HOT	Clockwise (Toward passenger compartment)
—	—	STOP	STOP
⊖	⊕	HOT → COLD	Counterclockwise (Toward engine compartment)

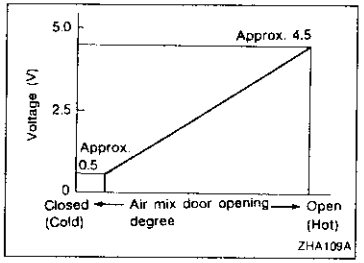

PBR characteristics

Measure voltage between terminals ④ and ② at vehicle harness side.

MODE DOOR CONTROL

Component parts

Mode door control system components are:

1) Auto amp.
2) Mode door motor
3) PBR
4) In-vehicle sensor
5) Ambient sensor
6) Sunload sensor

System operation

The auto amp. computes the air discharge conditions according to the ambient temperature and the in-vehicle temperature. The computed discharge conditions are then corrected for sunload. By this correction, it is determined through which outlets air will flow into the passenger compartment.

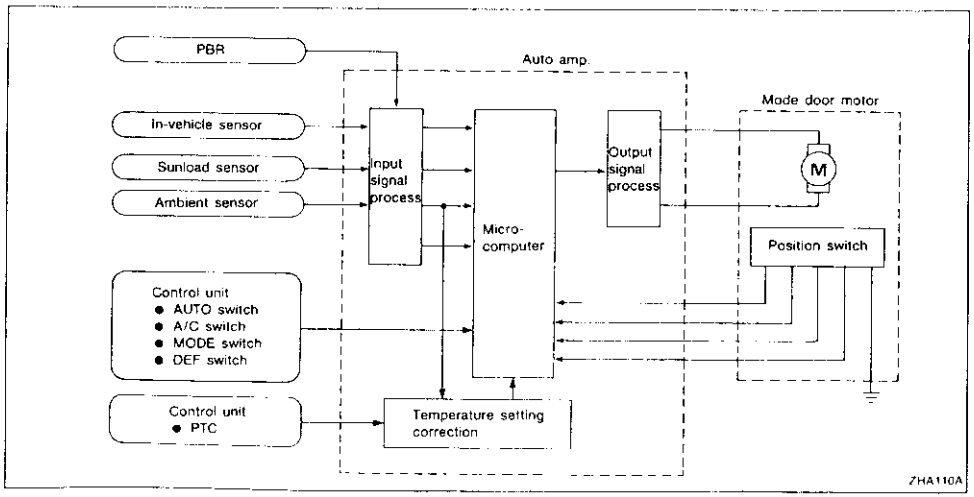

Control System Output Components (Cont'd)

Mode door control specification

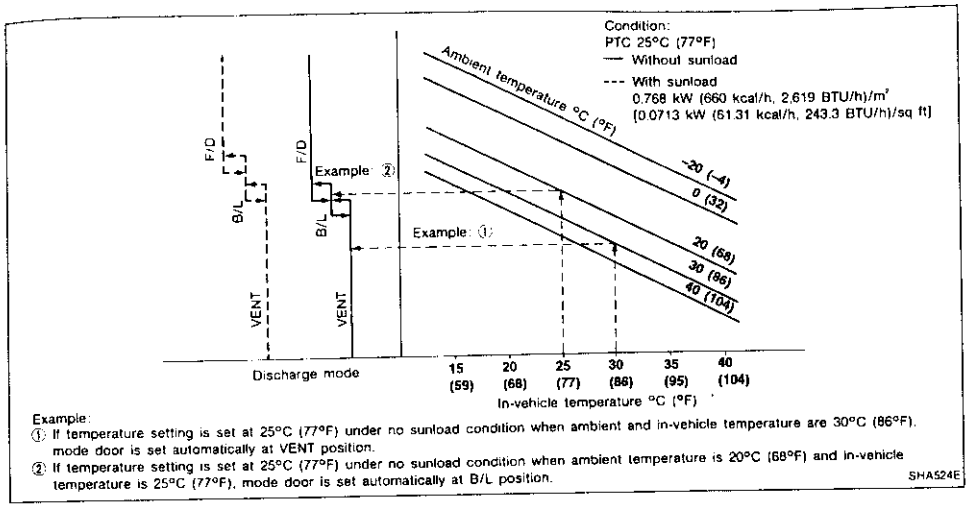

Example:
① If temperature setting is set at 25°C (77°F) under no sunload condition when ambient and in-vehicle temperature are 30°C (86°F), mode door is set automatically at VENT position.
② If temperature setting is set at 25°C (77°F) under no sunload condition when ambient temperature is 20°C (68°F) and in-vehicle temperature is 25°C (77°F), mode door is set automatically at B/L position.

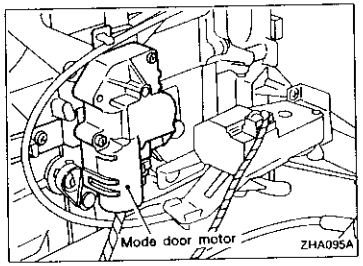

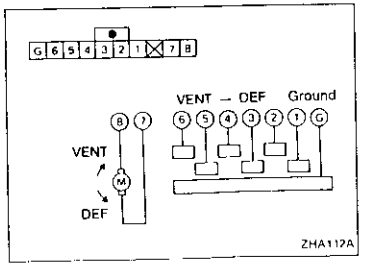

MODE DOOR MOTOR

The mode door motor is attached to the heater unit. It rotates so that air is discharged from the outlet set by the auto amp. Motor rotation is conveyed to a link which activates the mode door.

7	8	Mode door operation	Direction of side link rotation
⊕	⊖	VENT → DEF	Counterclockwise
—	—	STOP	STOP
⊖	⊕	DEF → VENT	Clockwise

Control System Output Components (Cont'd)

INTAKE DOOR CONTROL

Components parts

Intake door control system components are:
1) Auto amp.
2) Intake door motor
3) PBR
4) In-vehicle sensor
5) Ambient sensor
6) Sunload sensor

System operation

The intake door control determines intake door position based on the ambient temperature and the in-vehicle temperature. When the DEF button is pushed, the auto amp. sets the intake door at the "Fresh" position.

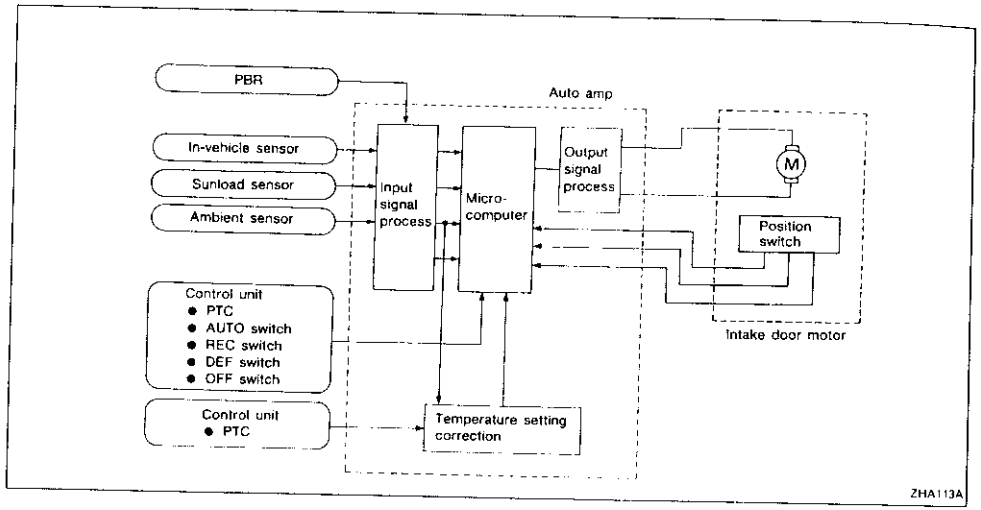

Intake door control specification

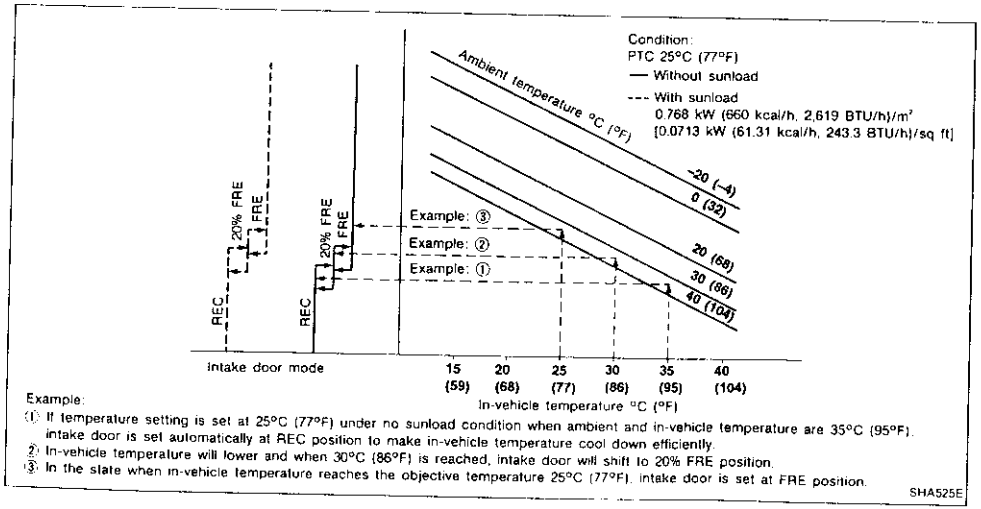

Example:
① If temperature setting is set at 25°C (77°F) under no sunload condition when ambient and in-vehicle temperature are 35°C (95°F), intake door is set automatically at REC position to make in-vehicle temperature cool down efficiently.
② In-vehicle temperature will lower and when 30°C (86°F) is reached, intake door will shift to 20% FRE position.
③ In the state when in-vehicle temperature reaches the objective temperature 25°C (77°F), intake door is set at FRE position.

SHA525E

Control System Output Components (Cont'd)

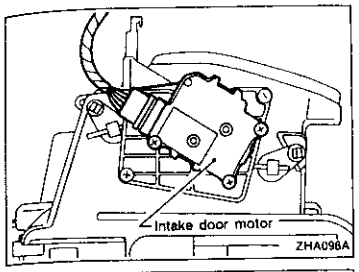

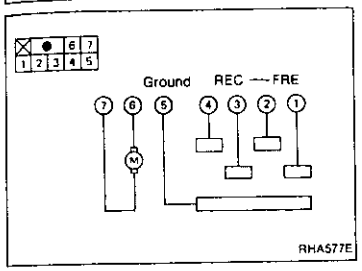

INTAKE DOOR MOTOR

The intake door motor is attached to the intake unit. It rotates so that air is drawn from inlets set by the auto amp. Motor rotation is conveyed to a lever which activates the intake door.

Intake door motor operation

6	7	Intake door operation	Movement of link rotation
⊕	⊖	REC → FRE	Counterclockwise
—	—	STOP	STOP
⊖	⊕	FRE → REC	Clockwise

FAN SPEED CONTROL

Component parts

Fan speed control system components are:
1) Auto amp.
2) Fan control amplifier
3) PBR
4) In-vehicle sensor
5) Ambient sensor
6) Sunload sensor
7) Thermal transmitter

System operation

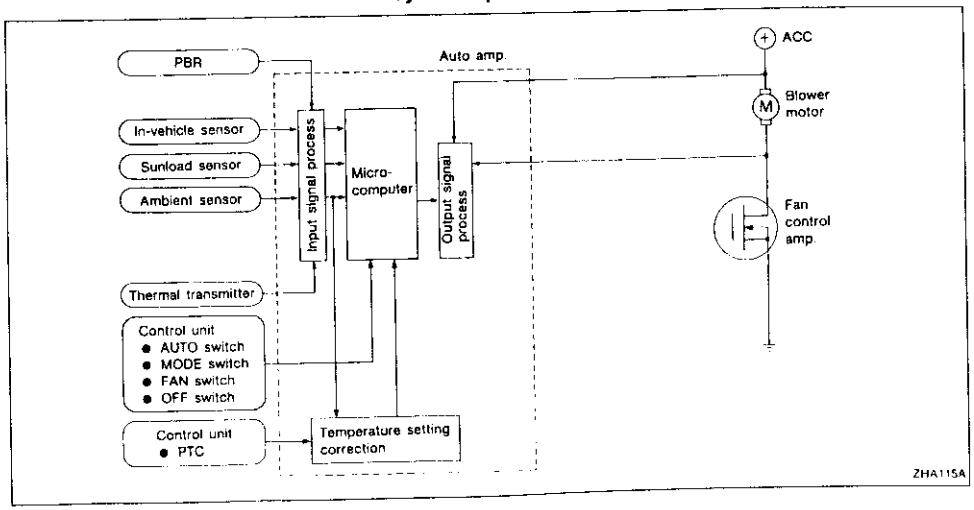

Control System Output Components (Cont'd)

AUTOMATIC MODE

In the automatic mode, the blower motor speed is calculated by the auto amp. based on inputs from the PBR, in-vehicle sensor, sunload sensor, and ambient sensor. The blower motor applied voltage ranges from approximately 4 volts (lowest speed) to 12 volts (highest speed).
To control blower speed (in the range of 2V to 3V), the auto amp. supplies a signal to the fan control amplifier. Based on this signal, the fan control amplifier controls the current flow from the blower motor to ground.

STARTING FAN SPEED CONTROL

Start up from "COLD SOAK" condition (Automatic mode)

In a cold start up condition where the engine coolant temperature is below 50°C (122°F) and mode door position is BI-LEVEL, F/D or FOOT, the blower will not operate for a short period of time (up to 150 seconds). The exact start delay time varies depending on the ambient and in-vehicle temperature.
In the most extreme case (very low ambient) the blower starting delay will be 150 seconds. After this delay, the blower will operate at low speed until the engine coolant temperature rises above 50°C (122°F). Then the blower speed will increase to the objective speed.

Start up from normal or "HOT SOAK" condition (Automatic mode)

The blower will begin operation momentarily after the AUTO switch is pushed. The blower speed will gradually rise to the objective speed over a time period of 8 seconds or less (actual time depends on the objective blower speed).
If the in-vehicle temperature is 35°C (95°F) or more, the blower will not operate for 3 seconds after AUTO switch is pushed.

BLOWER SPEED COMPENSATION

Sunload

When the in-vehicle temperature and the set temperature are very close, the blower will operate at low speed. With the mode door in the VENT position, the low speed varies depending on the sunload. During conditions of high sunload, the blower low speed will rise (approx. 6.0V). During lesser sunload conditions, the low speed will drop to "normal" low speed (approx. 5.0V).

Fan speed control specification

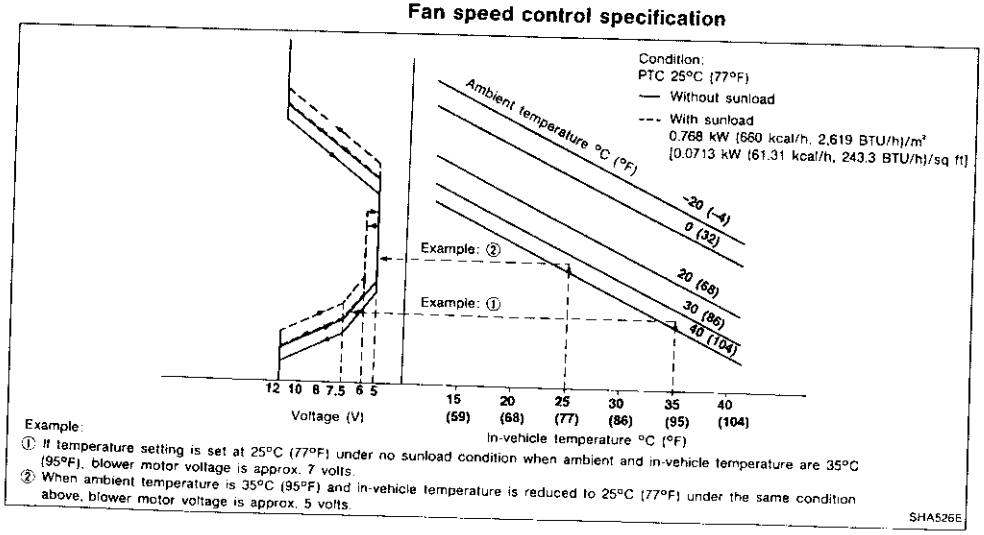

Example:
① If temperature setting is set at 25°C (77°F) under no sunload condition when ambient and in-vehicle temperature are 35°C (95°F), blower motor voltage is approx. 7 volts.
② When ambient temperature is 35°C (95°F) and in-vehicle temperature is reduced to 25°C (77°F) under the same condition above, blower motor voltage is approx. 5 volts.

SHA526E

Control System Output Components (Cont'd)

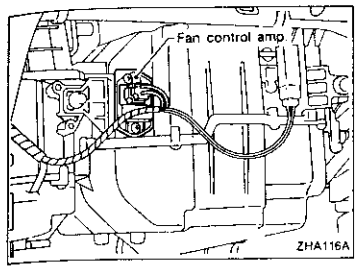

FAN CONTROL AMPLIFIER

The fan control amplifier is located on the cooling unit. It amplifies the base current flowing from the auto amp. to change the blower speed within the range of 4V to 12V.

MAGNET CLUTCH CONTROL

The ECM (ECCS control module) controls compressor operation using inputs from the throttle position sensor and auto amplifier.

Acceleration cut control

The ECM (ECCS control module) will turn the compressor "ON" or "OFF" based on the signal from the throttle position sensor.

HFC-134a (R-134a) Service Procedure

SETTING OF SERVICE TOOLS AND EQUIPMENT

DISCHARGING REFRIGERANT

WARNING:

Avoid breathing A/C refrigerant and lubricant vapor or mist. Exposure may irritate eyes, nose and throat. Remove HFC-134a (R-134a) from A/C system using certified service equipment meeting requirements of HFC-134a (R-134a) recycling equipment or HFC-134a (R-134a) recovery equipment. If accidental system discharge occurs, ventilate work area before resuming service. Additional health and safety information may be obtained from refrigerant and lubricant manufacturers.

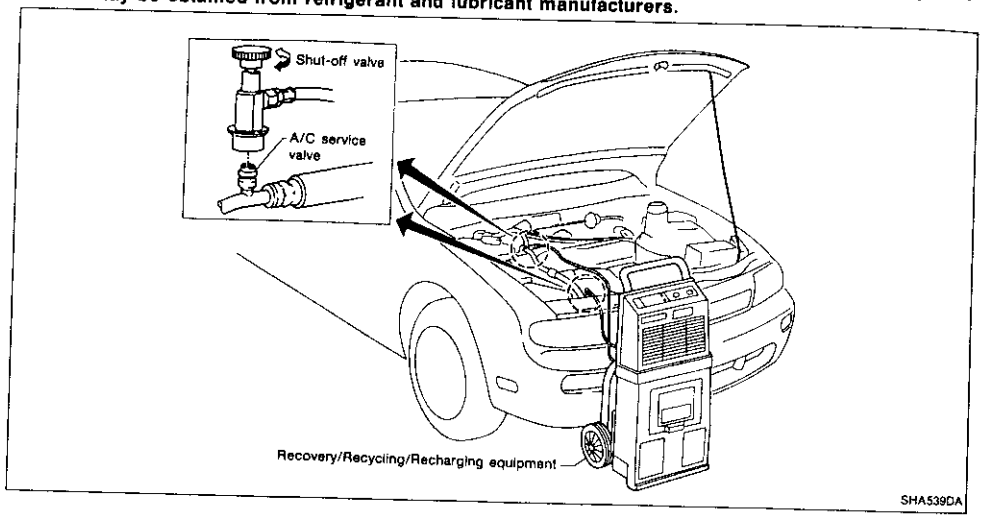

EVACUATING SYSTEM AND CHARGING REFRIGERANT

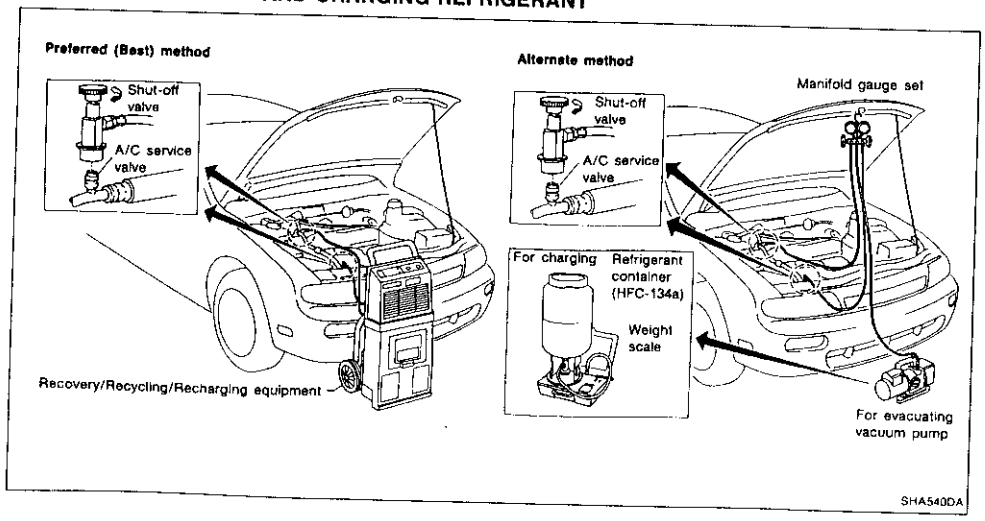

HFC-134a (R-134a) Service Procedure (Cont'd)

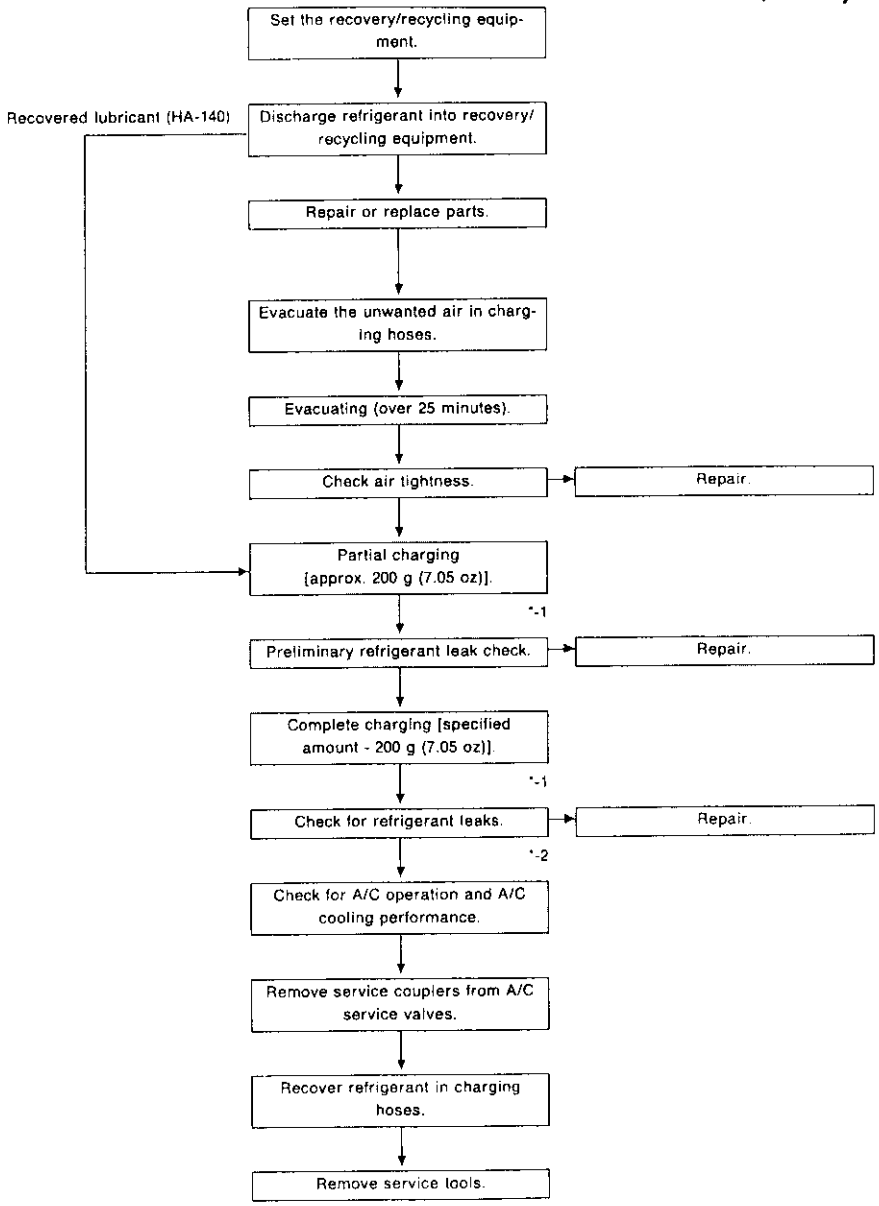

Note: *-1 Before charging refrigerant, ensure engine is off.
*-2 Before checking for leaks, start engine to activate air conditioning system then turn it off. Service valve caps must be attached to valves (to prevent leakage).

Maintenance of Lubricant Quantity in Compressor

The lubricant used to lubricate the compressor circulates through the system with the refrigerant. Add lubricant to compressor when replacing any component or after a large gas leakage occurred. It is important to maintain the specified amount.

If lubricant quantity is not maintained properly, the following malfunctions may result:

- Lack of lubricant: May lead to a seized compressor
- Excessive lubricant: Inadequate cooling (thermal exchange interference)

LUBRICANT

Name: Nissan A/C System Oil Type R
Part number: KLH00-PAGR0

CHECKING AND ADJUSTING

Adjust the lubricant quantity according to the flowchart shown below.

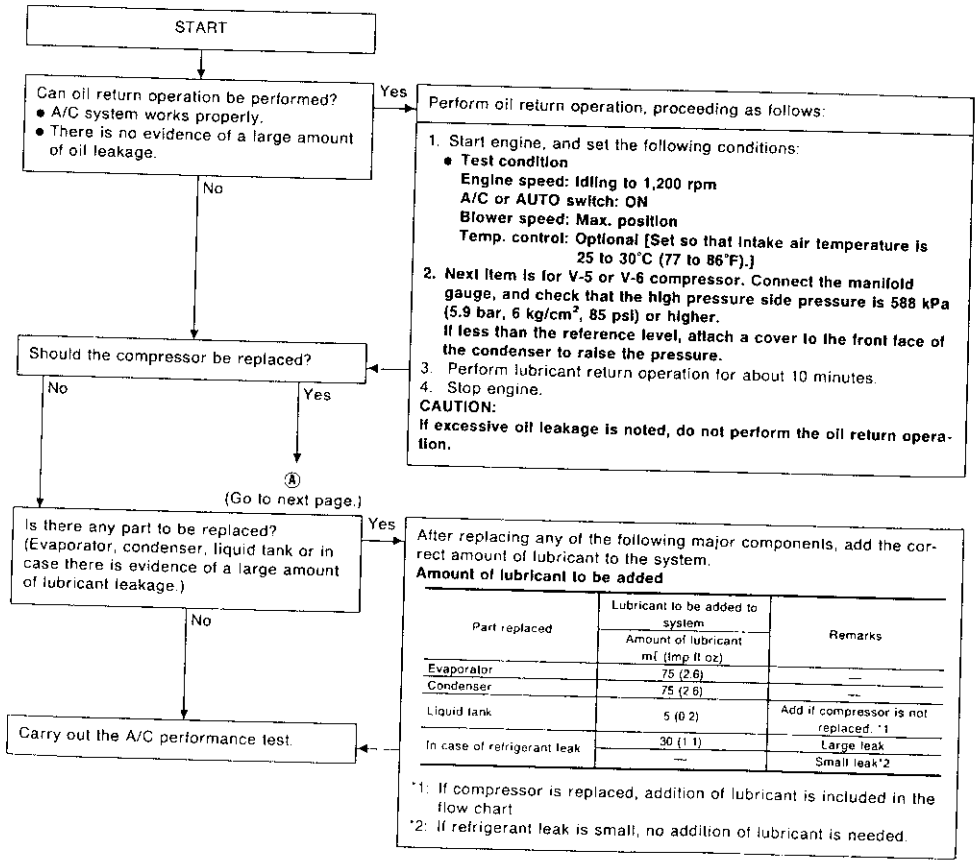

Maintenance of Lubricant Quantity in Compressor (Cont'd)

Ⓐ

1. Discharge refrigerant into the refrigerant recovery/recycling equipment. Measure oil discharged into the recovery/recycling equipment.
2. Remove the drain plug of the "old" (removed) compressor (applicable only to V-5, V-6 or DKS-16H compressor). Drain the oil into a graduated container and record the amount of drained oil.
3. Remove the drain plug and drain the oil from the "new" compressor into a separate, clean container.
4. Measure an amount of new oil installed equal to amount drained from "old" compressor. Add this oil to "new" compressor through the suction port opening.
5. Measure an amount of new oil equal to the amount recovered during discharging. Add this oil to "new" compressor through the suction port opening.
6. Torque the drain plug.
   V-5 or V-6 compressor: 18 - 19 N·m (1.8 - 1.9 kg-m, 13 - 14 ft-lb)
   DKS-16H compressor: 14 - 16 N·m (1.4 - 1.6 kg-m, 10 - 12 ft-lb)
7. If the liquid tank also needs to be replaced, add an additional 5 mℓ (0.2 Imp fl oz) of oil at this time.
   Do not add this 5 mℓ (0.2 Imp fl oz) of oil if only replacing the compressor.

Oil adjusting procedure for compressor replacement

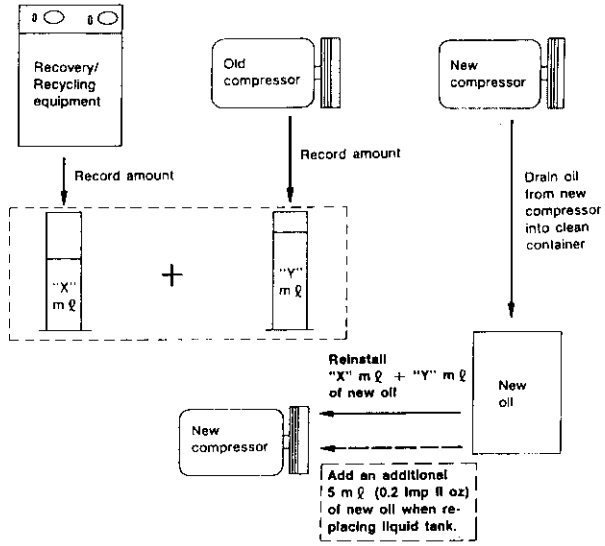

RHA065DC

Refrigerant Lines

- Refer to HA-4 regarding "Precautions for Refrigerant Connection".

LHD MODEL

SEC. 271·272·276

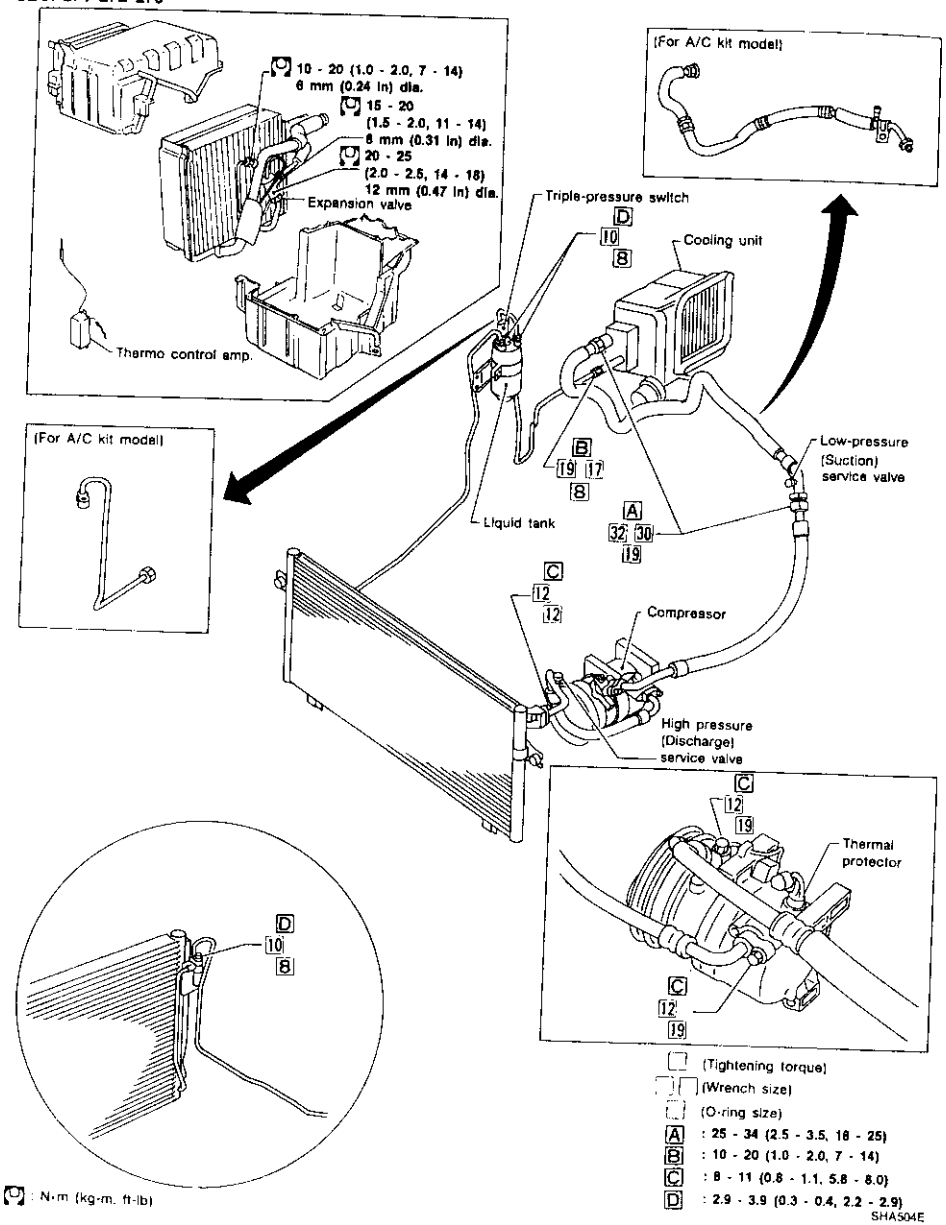

Refrigerant Lines (Cont'd)

RHD MODEL

SEC. 271·272·276

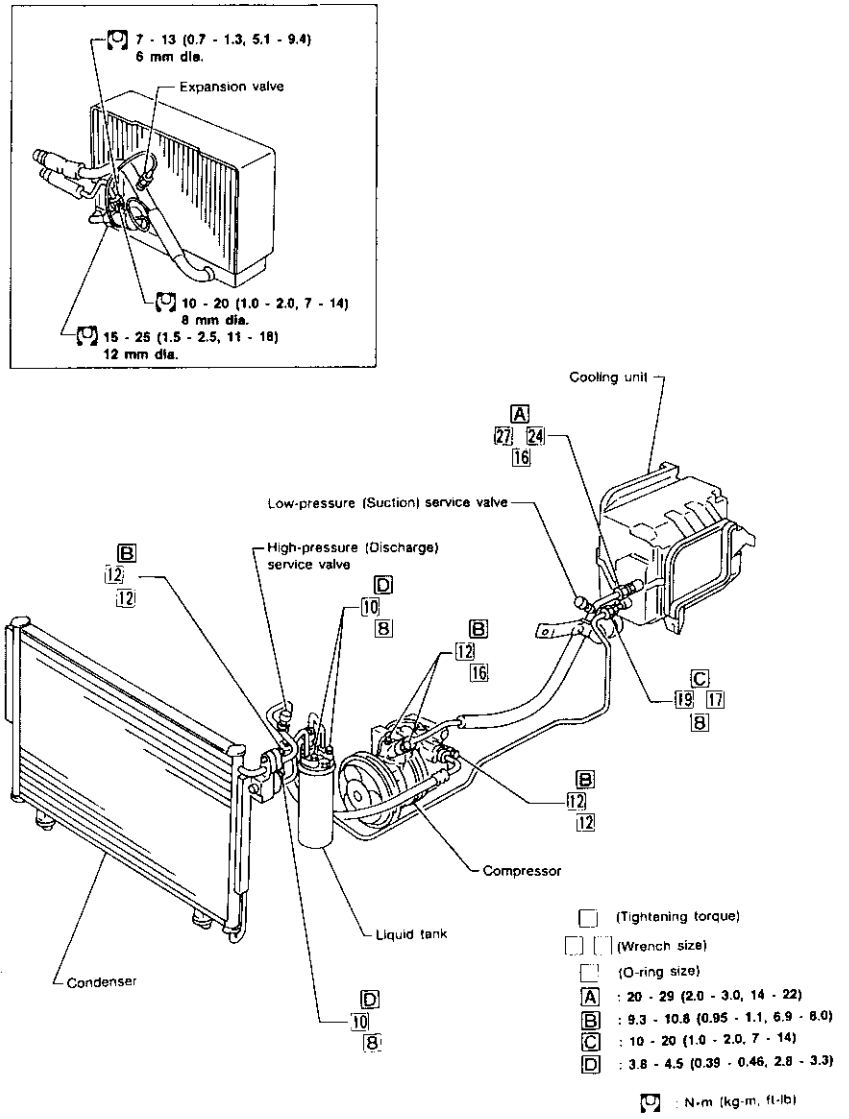

Compressor Mounting

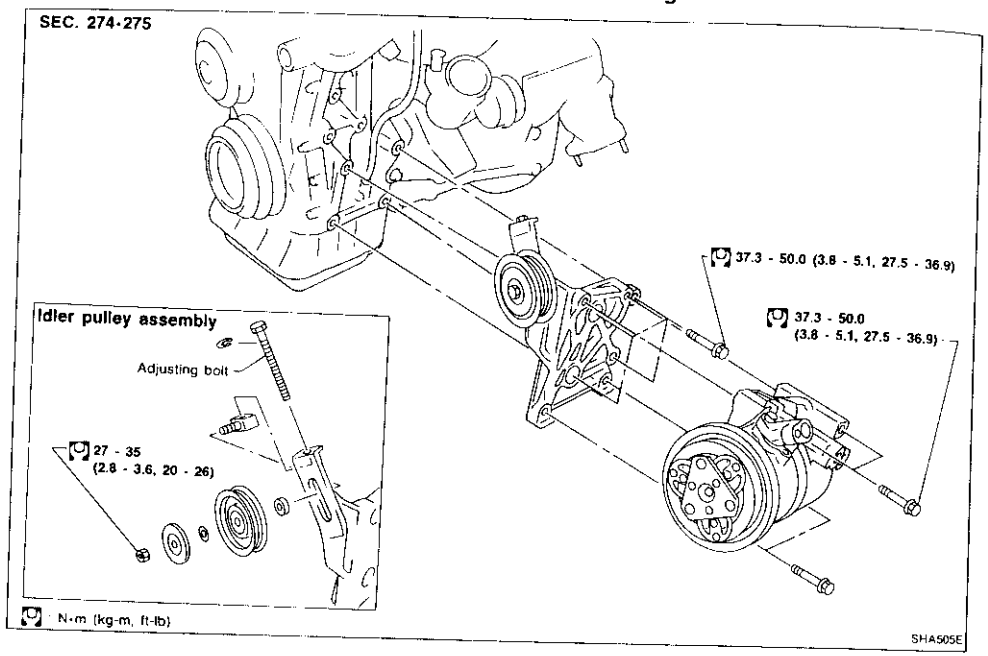

Belt Tension

- Refer to MA section ("Checking Drive Belts", "ENGINE MAINTENANCE").

Fast Idle Control Device (FICD)

- Refer to EC section ("IACV-FICD SOLENOID VALVE", "TROUBLE DIAGNOSES").

Compressor — Model DKV-14C (ZEXEL make)

SEC. 274

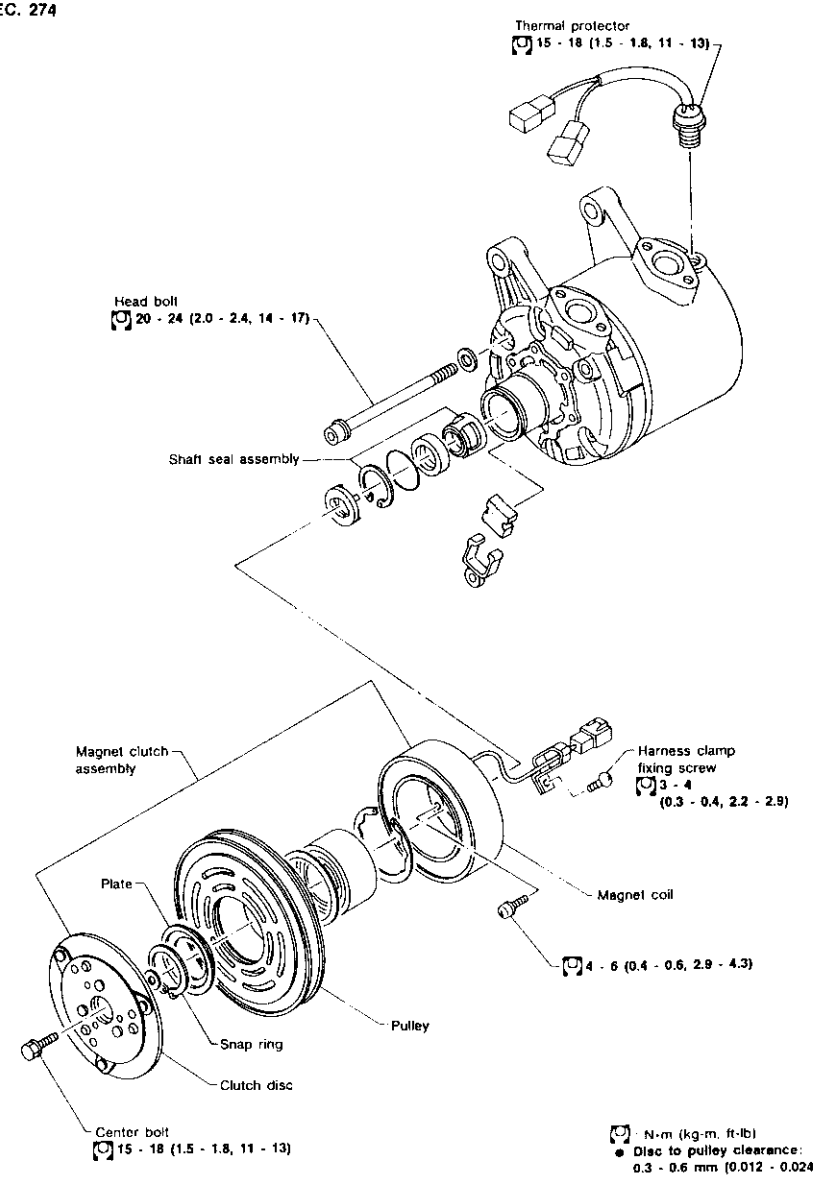

Compressor — Model DKV-14C (ZEXEL make) (Cont'd)

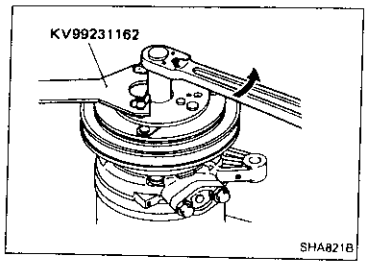

COMPRESSOR CLUTCH

Removal

- When removing center bolt, hold clutch disc with clutch disc wrench.

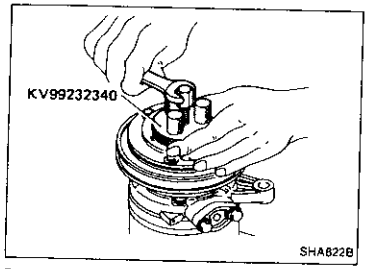

- Using clutch disc puller clutch disc can be removed easily.

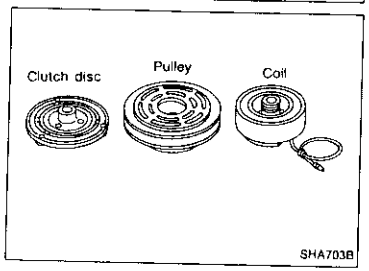

Inspection

Clutch disc

If the contact surface shows signs of damage due to excessive heat, the clutch disc and pulley should be replaced.

Pulley

Check the appearance of the pulley assembly. If the contact surface of the pulley shows signs of excessive grooving due to slippage, both the pulley and clutch disc should be replaced. The contact surfaces of the pulley assembly should be cleaned with a suitable solvent before reinstallation.

Coil

Check coil for loose connection or cracked insulation.

Installation

- Position coil assembly on compressor body. Be sure that the electrical terminals are reassembled in the original position. Install and tighten coil mounting screws evenly.

Compressor — Model DKV-14C (ZEXEL make) (Cont'd)

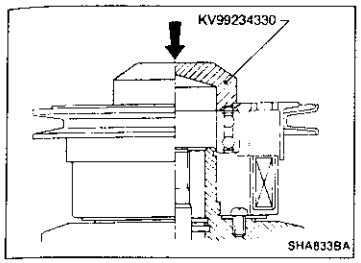

- Press pulley assembly onto the neck of coil assembly using pulley installer.
- Wipe oil thoroughly off the clutch surface.

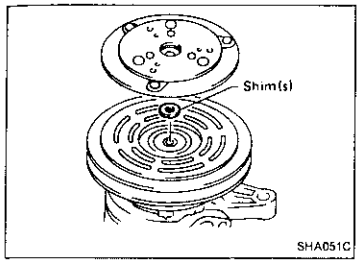

Adjustment

- Select adjusting shim(s) which give(s) the correct clearance between pulley and clutch disc.
- Using a plastic mallet, tape clutch disc in place on drive shaft.
- Do not use excessive force with a plastic mallet or in a press, or internal damages may result.
- Place spring washer and center bolt onto drive shaft. Tighten center bolt to drive clutch wheel onto drive shaft.

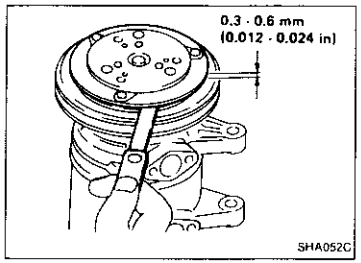

- Check clearance around the entire periphery of clutch disc.
  Disc-to-pulley clearance:
  0.3 - 0.6 mm (0.012 - 0.024 in)
  If the specified clearance is not obtained, replace adjusting spacer and readjust.

Break-in operation

When replacing compressor clutch assembly, always conduct the break-in operation. This is done by engaging and disengaging the clutch about thirty times.
Break-in operation raises the level of transmitted torque.

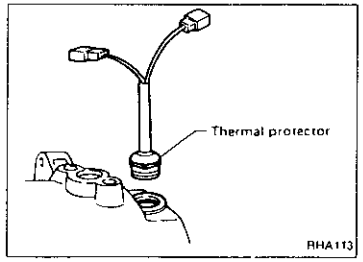

THERMAL PROTECTOR

Inspection

- When servicing, do not allow foreign material to get into compressor.
- Check continuity between two terminals.

Overhaul — Push Control Unit Assembly

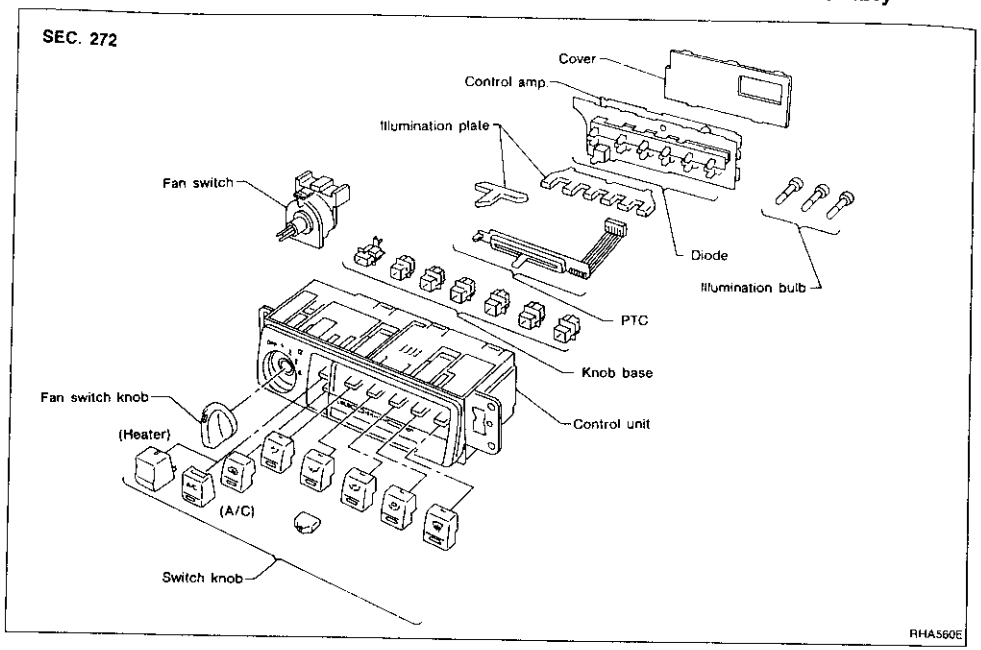

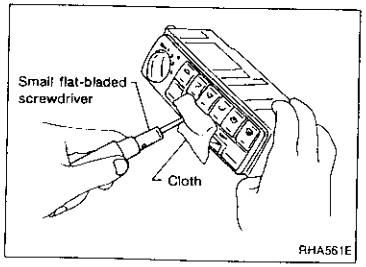

Disassembly

1. Remove switch knobs.

Be careful not to scratch knobs during removal.

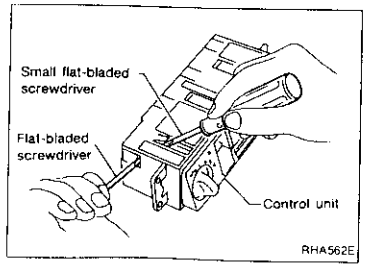

2. Remove fan switch knob.

General Specifications

COMPRESSOR

Model	DKV-14C
Type	Vane rotary
Displacement cm³ (cu in)/Rev	140 (8.54)
Direction of rotation	Clockwise (Viewed from drive end)
Drive belt	Poly V type

LUBRICATION OIL

Model	ZEXEL make DKV-14C
Name	Nissan A/C System Oil Type R
Part No.	KLH00-RAGR0
Capacity mℓ (Imp fl oz)	
Total in system	200 (7.0)
Compressor (Service part) charging amount	200 (7.0)

REFRIGERANT

Type	HFC-134a (R-134a)
Capacity kg (lb)	
LHD model	0.70 - 0.80 (1.54 - 1.76)
RHD model	0.60 - 0.70 (1.32 - 1.54)

Inspection and Adjustment

ENGINE IDLING SPEED

When A/C is ON

- **Refer to EC section ("Inspection and Adjustments", "SERVICE DATA AND SPECIFICATIONS").**

BELT TENSION

- **Refer to MA section ("Checking Drive Belts", "ENGINE MAINTENANCE").**

COMPRESSOR

Model	DKV-14C
Clutch disc-pulley clearance mm (in)	0.3 - 0.6 (0.012 - 0.024)

ELECTRICAL SYSTEM

SECTION EL

When you read wiring diagrams:
• Read GI section, "HOW TO READ WIRING DIAGRAMS".
When you perform trouble diagnoses, read GI section, "HOW TO FOLLOW FLOW CHART IN TROUBLE DIAGNOSES" and "HOW TO PERFORM EFFICIENT DIAGNOSIS FOR AN ELECTRICAL INCIDENT".

CONTENTS

PRECAUTIONS 4
Supplemental Restraint System "AIR BAG" and "SEAT BELT PRE-TENSIONER" 4
HARNESS CONNECTOR 5
Description 5
STANDARDIZED RELAY 6
Description 6
POWER SUPPLY ROUTING 8
Schematic 8
Wiring Diagram — POWER — 10
Fuse 19
Fusible Link 19
Circuit Breaker 19
BATTERY 20
How to Handle Battery 20
Battery Test and Charging Chart 23
Service Data and Specifications (SDS) 27
STARTING SYSTEM 28
System Description 28
Wiring Diagram — START — 29
Trouble-shooting 31
Construction 32
Removal and Installation 32
Magnetic Switch Check 33
Pinion/Clutch Check 33
Brush Check 33
Yoke Check 34
Armature Check 35
Assembly 36
Service Data and Specifications (SDS) 37
CHARGING SYSTEM 38
System Description 38
Wiring Diagram — CHARGE — 39
Trouble-shooting 40
Construction 41
Removal and Installation 41
Disassembly 42
Rotor Check 42
Brush Check 42
Stator Check 43
Diode Check 44
Assembly 45
Service Data and Specifications (SDS) 45
COMBINATION SWITCH 46
Check 46
Replacement 48
HEADLAMP 49
Bulb Replacement 49
Bulb Specifications 49
HEADLAMP — Without Daytime Light System — 50
System Description 50
Schematic 51
Wiring Diagram — H/LAMP — 52
Trouble Diagnoses 55
HEADLAMP — Daytime Light System — 56
System Description 56
Operation (Daytime light system) 57
Schematic 58
Wiring Diagram — DTRL — 59
Trouble Diagnoses 62
HEADLAMP — Headlamp Aiming Control — 64
Description 64
Wiring Diagram — AIM — 66
Aiming Adjustment 70
Trouble Diagnoses 71
EXTERIOR LAMP 72
Clearance, License and Tail Lamps/System Description 72
Clearance, License and Tail Lamps/ Wiring Diagram — TAIL/L — 74
Stop Lamp/Wiring Diagram — STOP/L — 80
Back-up Lamp/Wiring Diagram — BACK/L — 81

CONTENTS (Cont'd.)

Front Fog Lamps/System Description 82
Front Fog Lamp/Wiring Diagram — F/FOG — 84
Front Fog Lamp Aiming Adjustment 89
Rear Fog Lamp/System Description 90
Rear Fog Lamp/Wiring Diagram — R/FOG — 91
Turn Signal and Hazard Warning Lamps/System Description 93
Turn Signal and Hazard Warning Lamps/Schematic 95
Turn Signal and Hazard Warning Lamps/Wiring Diagram — TURN — 96
Turn Signal and Hazard Warning Lamps/Trouble Diagnoses 101
Combination Flasher Unit Check 101
Bulb Specifications 102
INTERIOR LAMP 103
Illumination/System Description 103
Illumination/Schematic 104
Illumination/Wiring Diagram — ILL — 105
Interior, Spot and Trunk Room Lamps/System Description 110
Bulb Specifications 110
Interior, Spot and Trunk Room Lamps/Wiring Diagram — INT/L — 111
METER AND GAUGES 113
System Description 113
Combination Meter 114
Speedometer, Tachometer, Temp. and Fuel Gauges/Wiring Diagram — METER — 115
Inspection/Fuel Gauge and Water Temperature Gauge 116
Inspection/Tachometer 117
Inspection/Speedometer and Vehicle Speed Sensor 118
Thermal Transmitter Check 120
Vehicle Speed Sensor Signal Check 120
Fuel Tank Gauge Unit Check 120
Lead Switch 121
WARNING LAMPS AND BUZZER 122
Warning Lamps/Schematic 122
Warning Lamps/Wiring Diagram — WARN — 123
Fuel Warning Lamp Sensor Check 129
Oil Pressure Switch Check 129
Diode Check 129
Warning Buzzer/System Description 130
Warning Buzzer/Wiring Diagram — CHIME — 131
Trouble Diagnoses — Warning Buzzer 133
Warning Buzzer Check 137
WIPER AND WASHER 138
Front Wiper and Washer/System Description 138
Front Wiper and Washer/Wiring Diagram — WIPER — 140
Trouble Diagnoses 142
Front Wiper Amplifier Check 144
Front Wiper Installation and Adjustment 144
Front Washer Nozzle Adjustment 144
Front Washer Tube Layout 145
Front Wiper Linkage 145
Rear Wiper and Washer/System Description 147
Rear Wiper and Washer/Wiring Diagram — WIP/R — 149
Rear Wiper Amplifier Check 151
Rear Wiper Installation and Adjustment 151
Rear Washer Nozzle Adjustment 151
Rear Washer Tube Layout 152
Check Valve (For rear washer) 152
Headlamp Washer/System Description 153
Headlamp Washer/Wiring Diagram — HLC — 154
Headlamp Washer Amplifier Check 156
Headlamp Washer Nozzle Adjustment 156
Headlamp Washer Tube Layout 156
Check Valve (For headlamp washer) 156
POWER WINDOW 157
System Description 157
Schematic 159
Wiring Diagram — WINDOW — 160
Trouble Diagnosis 163
POWER DOOR LOCK 169
System Description 169
Wiring Diagram — D/LOCK — 171
Trouble Diagnoses 173
POWER DOOR MIRROR 175
Wiring Diagram — MIRROR — 175
ELECTRIC SUN ROOF 179
Wiring Diagram — SROOF — 179
HORN, CIGARETTE LIGHTER AND CLOCK 181
Wiring Diagram — HORN — 181
REAR WINDOW DEFOGGER AND DOOR MIRROR DEFOGGER 185
System Description 185
Wiring Diagram — DEF — 186
Trouble Diagnoses 188
Filament Check 189
AUDIO AND POWER ANTENNA 190
Audio/System Description 190
Audio/Wiring Diagram — AUDIO — 191
Audio 195
Radio Fuse Check 195
Power Antenna/Wiring Diagram — P/ANT — 196
Location of Antenna 197

CONTENTS (Cont'd.)

Antenna Rod Replacement 197
Window Antenna Repair 198
HEATED SEAT 200
Wiring Diagram — H/SEAT — 200
MULTI-REMOTE CONTROL SYSTEM 202
System Description 202
Component Parts and Harness Connector Location 204
Schematic 205
Wiring Diagram — MULTI — 206
Input/Output Operation Signal 210
Trouble Diagnoses 211
Replacing Remote Controller or Control Unit 217
THEFT WARNING SYSTEM 218
System Description 218
Component Parts and Harness Connector Location 221
Schematic 222
Wiring Diagram — THEFT — 223
Input/Output Operation Signal 229
Trouble Diagnoses 230
LOCATION OF ELECTRICAL UNIT 249
Engine Compartment 249
Passenger Compartment 250
Trunk Compartment 252
HARNESS LAYOUT 253
Outline 253
Main Harness 254
Engine Room Harness 258
Engine Control Harness 264
Engine Harness 268
Body Harness 270
Tail Harness 274
Room Lamp Harness 276
Air Bag and Seat Belt Pre-tensioner Harness 277
Door Harness (LHD models) 278
Door Harness (RHD models) 279
SUPER MULTIPLE JUNCTION (SMJ) ..... Foldout page
Disconnecting and Connecting ..... Foldout page
Terminal Arrangement ..... Foldout page

WIRING DIAGRAM REFERENCE CHART

ECCS ..... EC SECTION
A/T CONTROL ..... AT SECTION
ANTI-LOCK BRAKING SYSTEM ..... BR SECTION
DIFFERENTIAL OIL COOLER ..... PD SECTION
AIR BAG AND SEAT BELT PRE-TENSIONER ..... PS SECTION
HEATER AND AIR CONDITIONER ..... HA SECTION

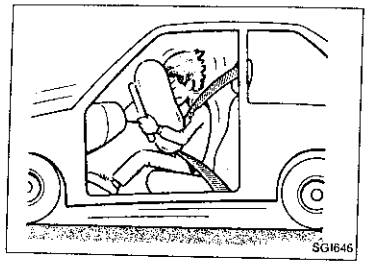

Supplemental Restraint System "AIR BAG" and "SEAT BELT PRE-TENSIONER"

The Supplemental Restraint System "Air Bag" and "Seat Belt Pre-tensioner", used along with a seat belt, help to reduce the risk or severity of injury to the driver and front passenger in a frontal collision. The Supplemental Restraint System consists of air bag modules (located in the center of the steering wheel and on the instrument panel on the passenger side), seat belt pre-tensioners, a diagnostic sensor unit, warning lamp, wiring harness and spiral cable. Information necessary to service the system safely is included in the **RS section** of this Service Manual.

WARNING:

- **To avoid rendering the SRS inoperative, which could increase the risk of personal injury or death in the event of a collision which would result in air bag inflation, all maintenance must be performed by an authorized NISSAN dealer.**
- **Improper maintenance, including incorrect removal and installation of the SRS, can lead to personal injury caused by unintentional activation of the system.**
- **All SRS electrical wiring harnesses and connectors are covered with yellow outer insulation. Do not use electrical test equipment on any circuit related to the SRS SYSTEM.**

Description

HARNESS CONNECTOR

- All harness connectors have been modified to prevent accidental looseness or disconnection.
- The connector can be disconnected by pushing or lifting the locking section.

CAUTION:

Do not pull the harness when disconnecting the connector.

[Example]

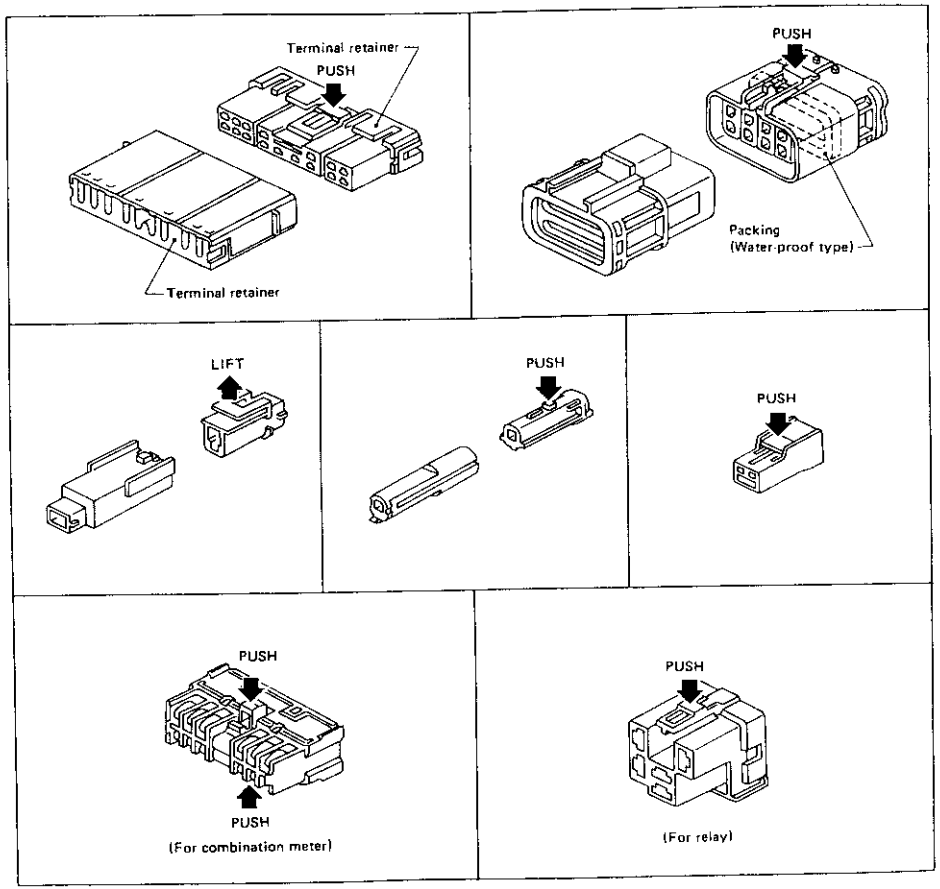

SEL769D

Description

NORMAL OPEN, NORMAL CLOSED AND MIXED TYPE RELAYS

Relays can mainly be divided into three types: normal open, normal closed and mixed type relays.

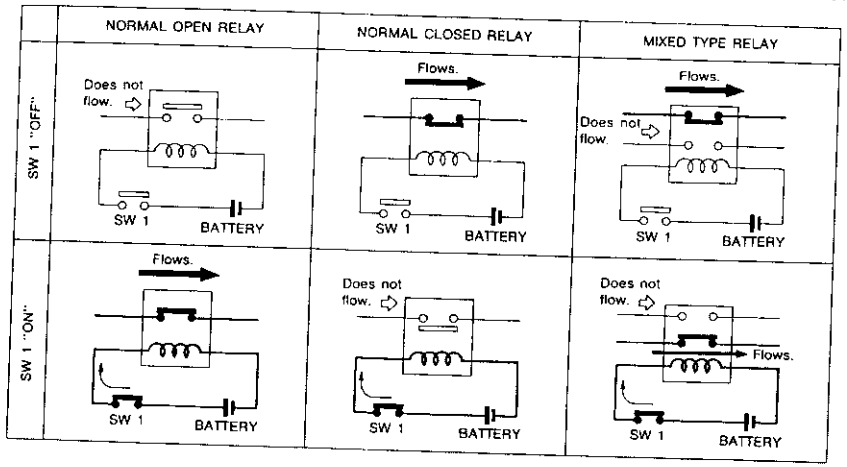

SEL881H

TYPE OF STANDARDIZED RELAYS

1M ..... 1 Make 2M ..... 2 Make
1T ..... 1 Transfer 1M·1B ..... 1 Make 1 Break

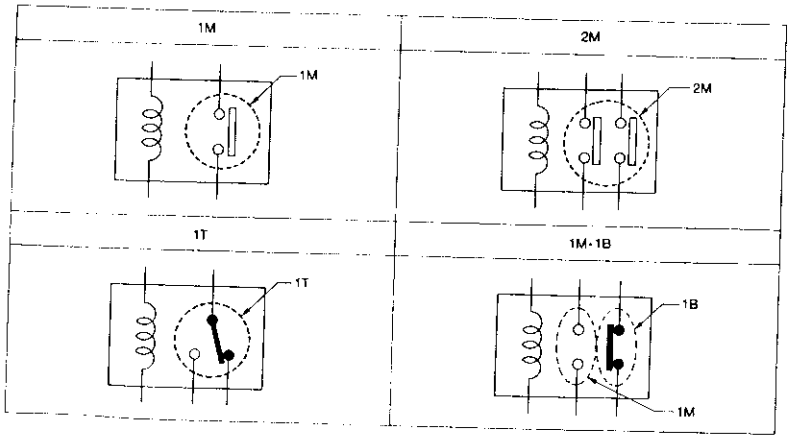

SEL882H

Description (Cont'd)

Type	Outer view	Circuit	Connector symbol and connection	Case color
1T	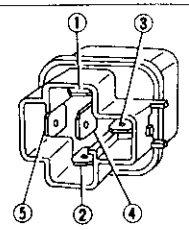	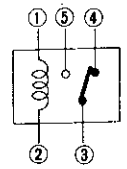	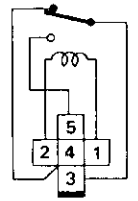	BLACK
1M	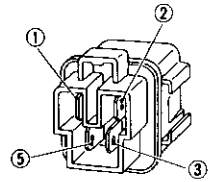	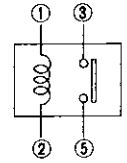	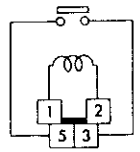	BLUE or GREEN
2M	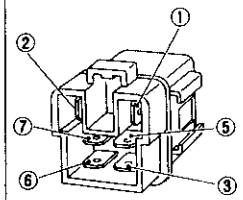	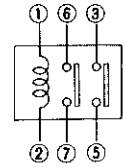	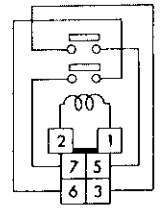	BROWN
1M·1B	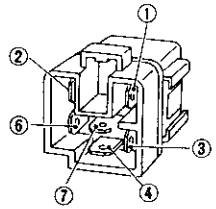	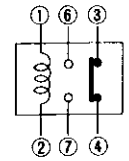	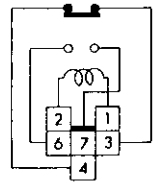	GRAY
1M	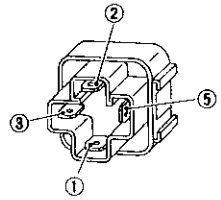	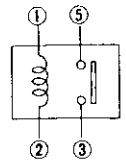	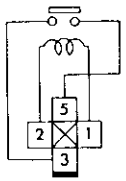	BLUE

The arrangement of terminal numbers on the actual relays may differ from those shown above.

SEL661T

Schematic

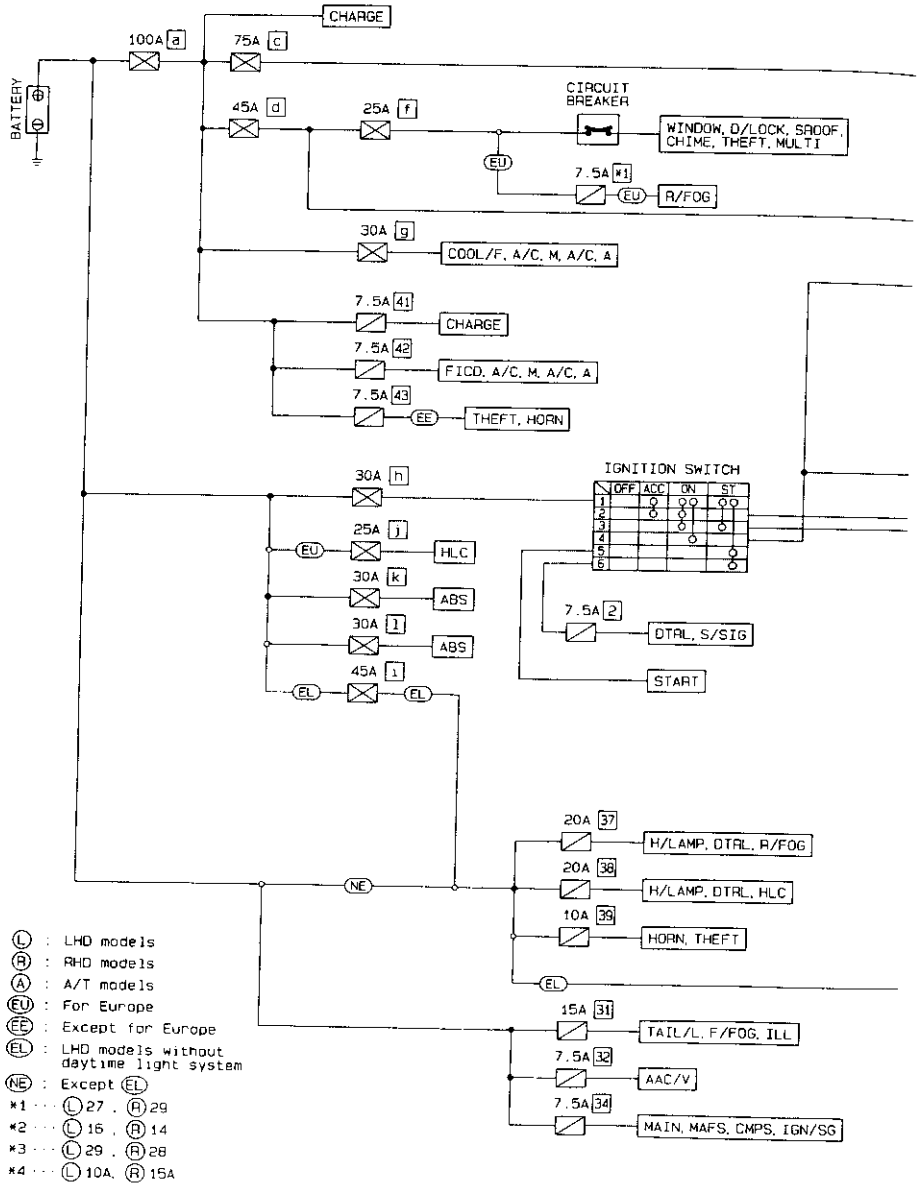

Ⓛ : LHD models
Ⓡ : RHD models
Ⓐ : A/T models
EU : For Europe
EE : Except for Europe
EL : LHD models without daytime light system
NE : Except EL
*1 ··· Ⓛ 27 , Ⓡ 29
*2 ··· Ⓛ 16 , Ⓡ 14
*3 ··· Ⓛ 29 , Ⓡ 28
*4 ··· Ⓛ 10A, Ⓡ 15A

Schematic (Cont'd)

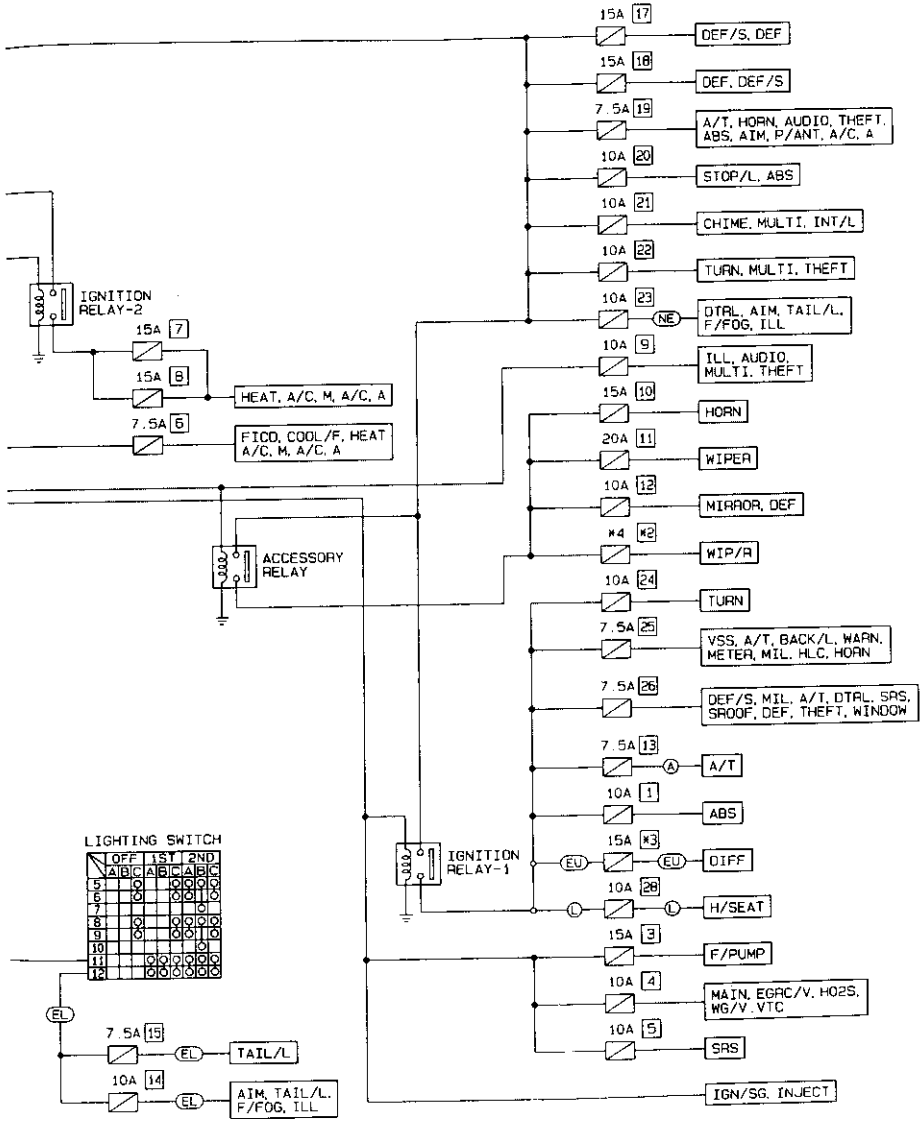

SEL667T

Wiring Diagram — POWER —

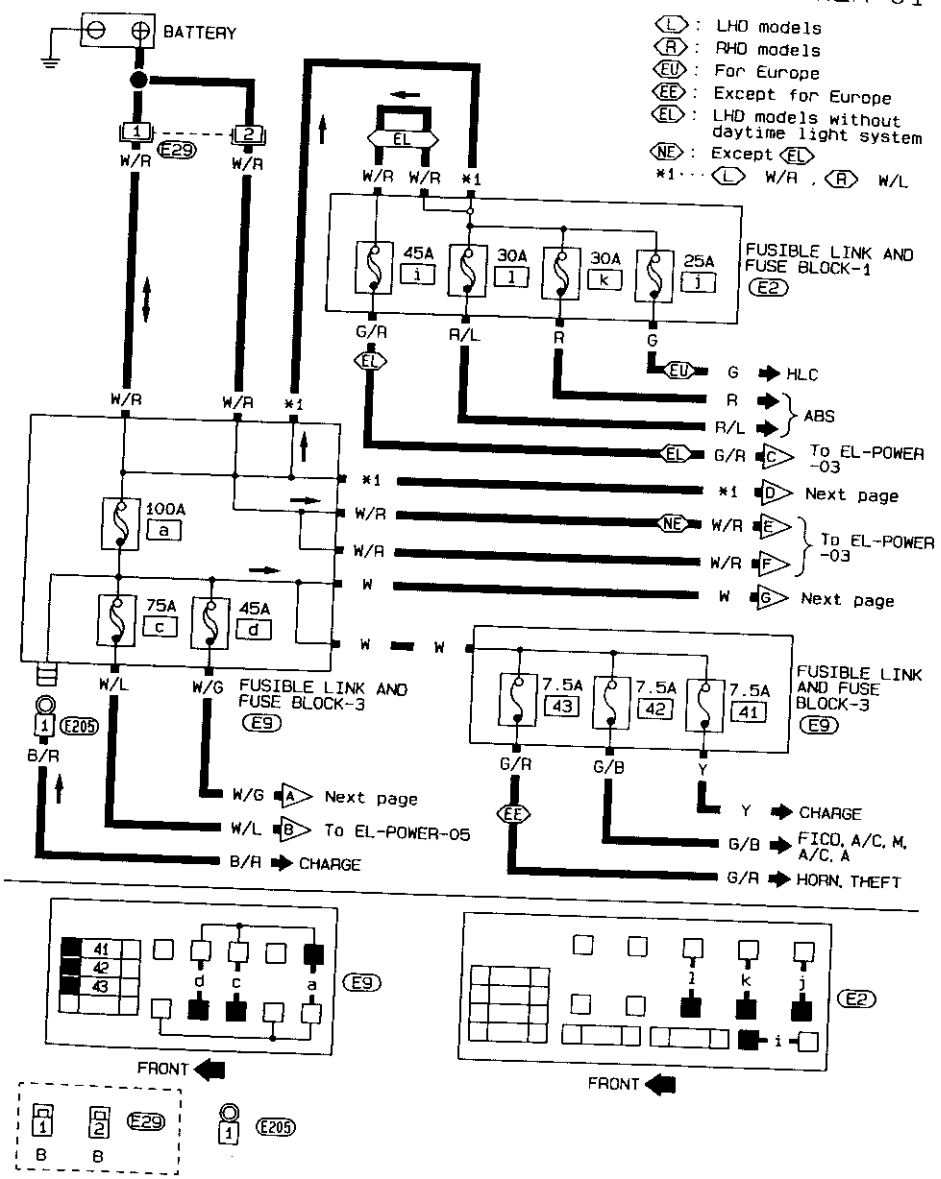

Wiring Diagram — POWER — (Cont'd)

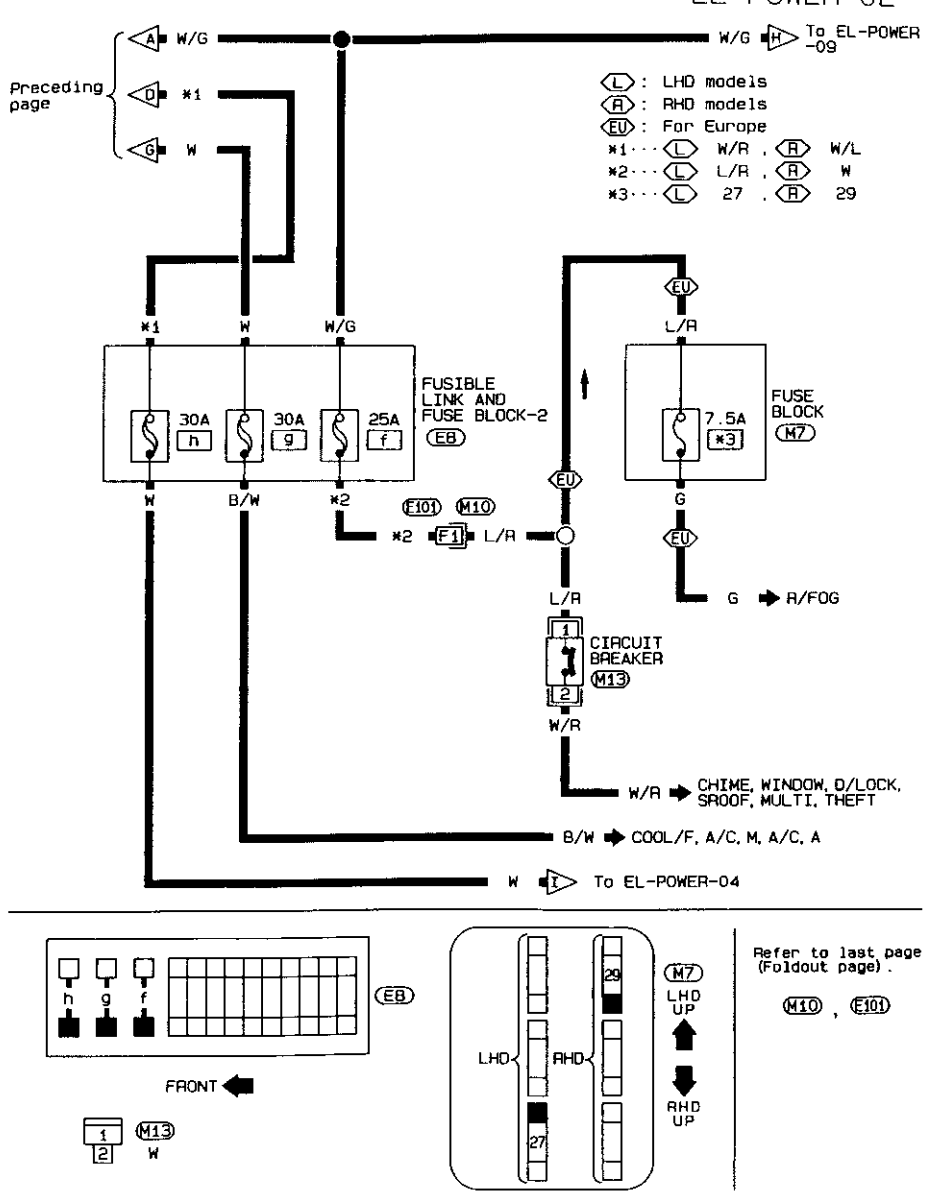

EL-POWER-03

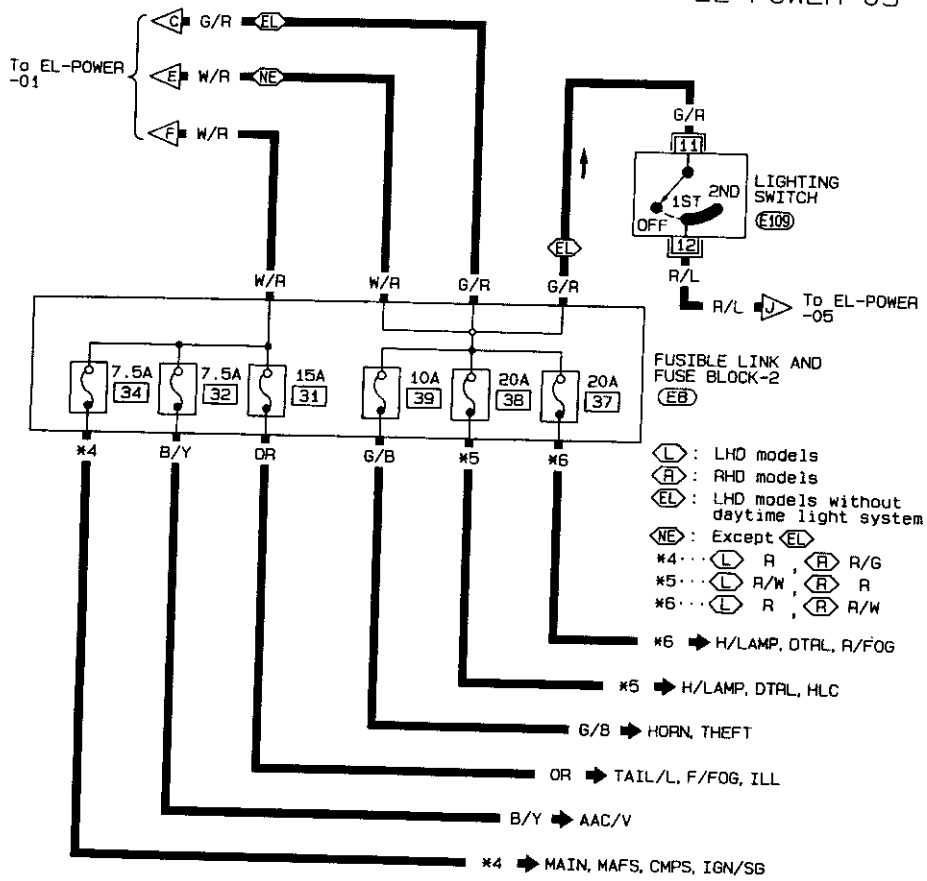

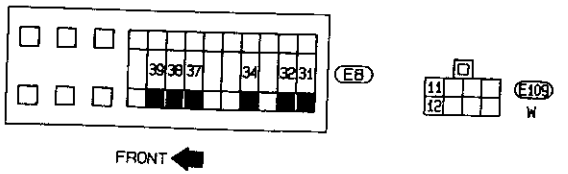

SEL670T

EL-POWER-04

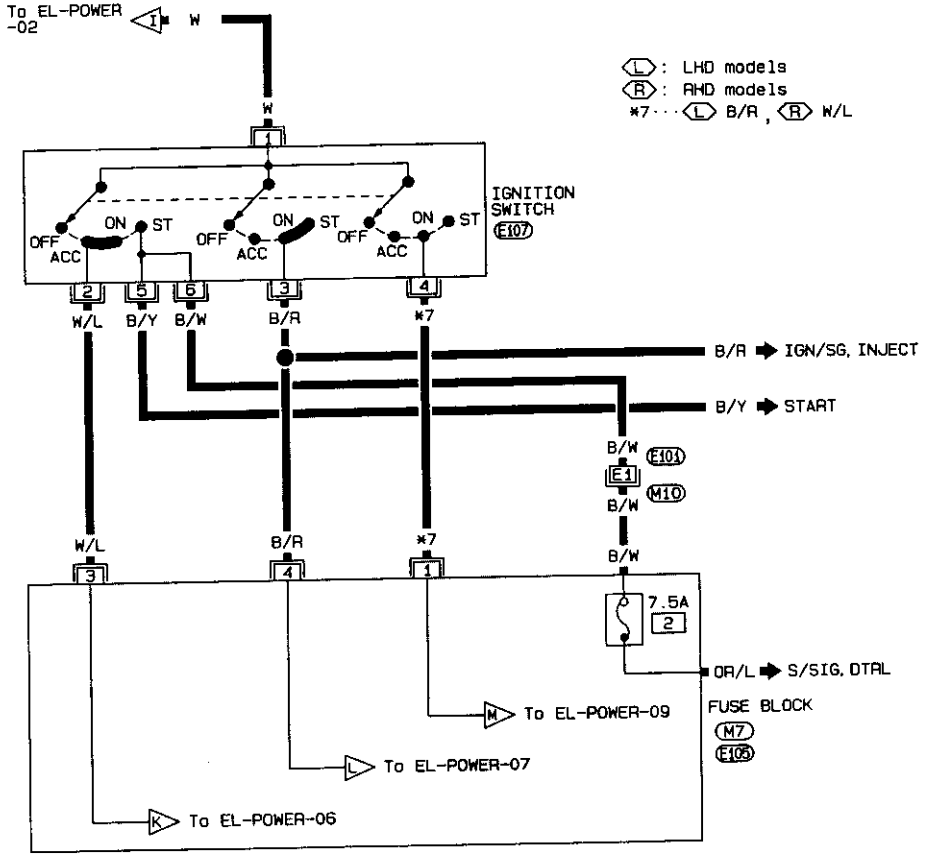

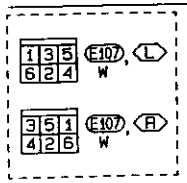

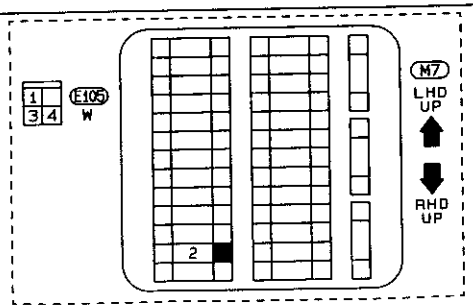

Refer to last page (Foldout page).
M10 , E101

SEL671T

EL-POWER-05

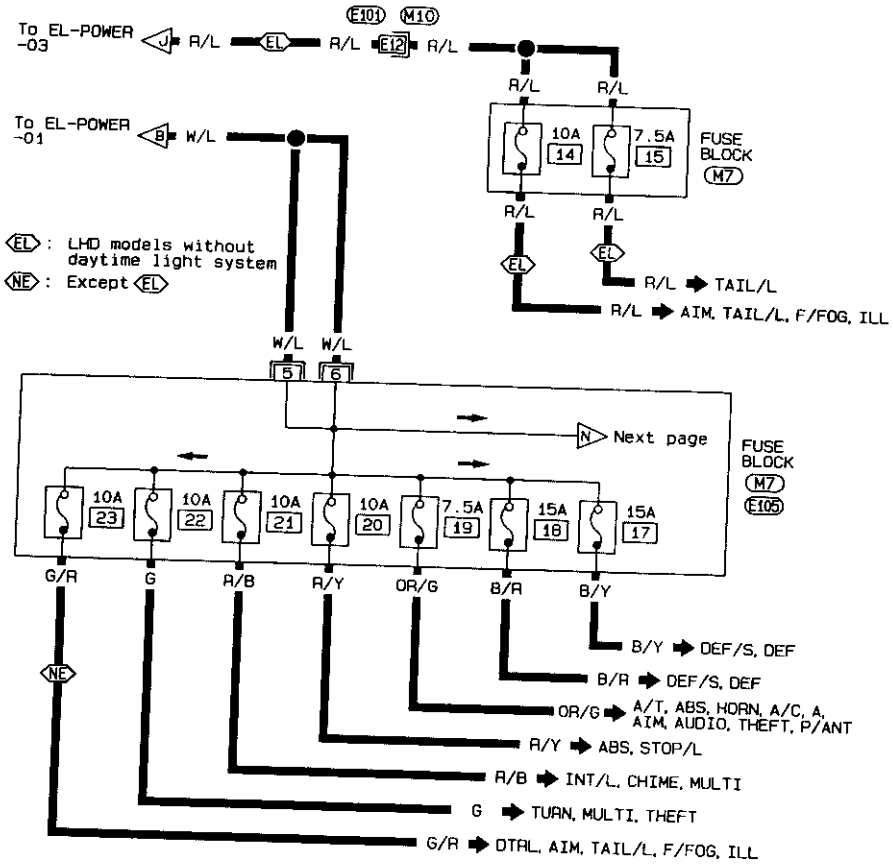

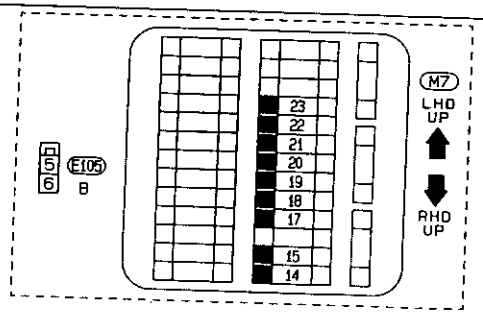

Refer to last page (Foldout page).

M10 , E101

SEL672T

EL-POWER-06

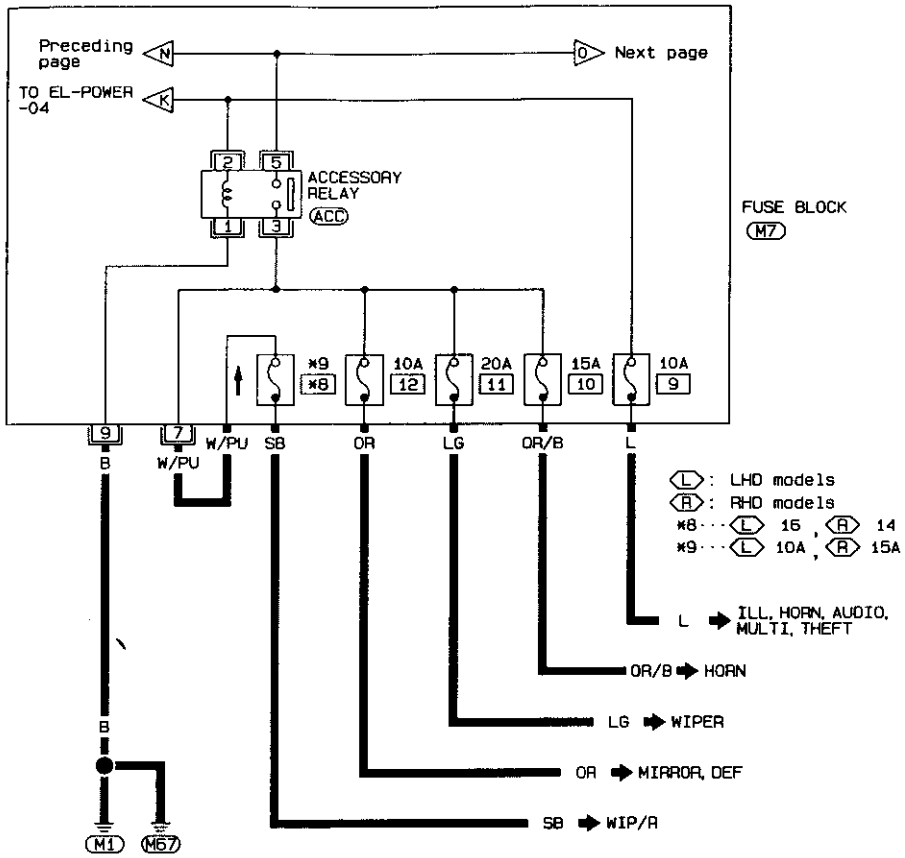

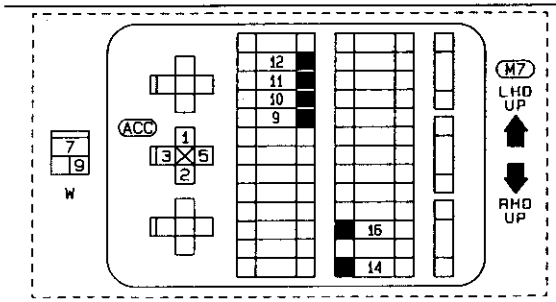

SEL673T

EL-POWER-07

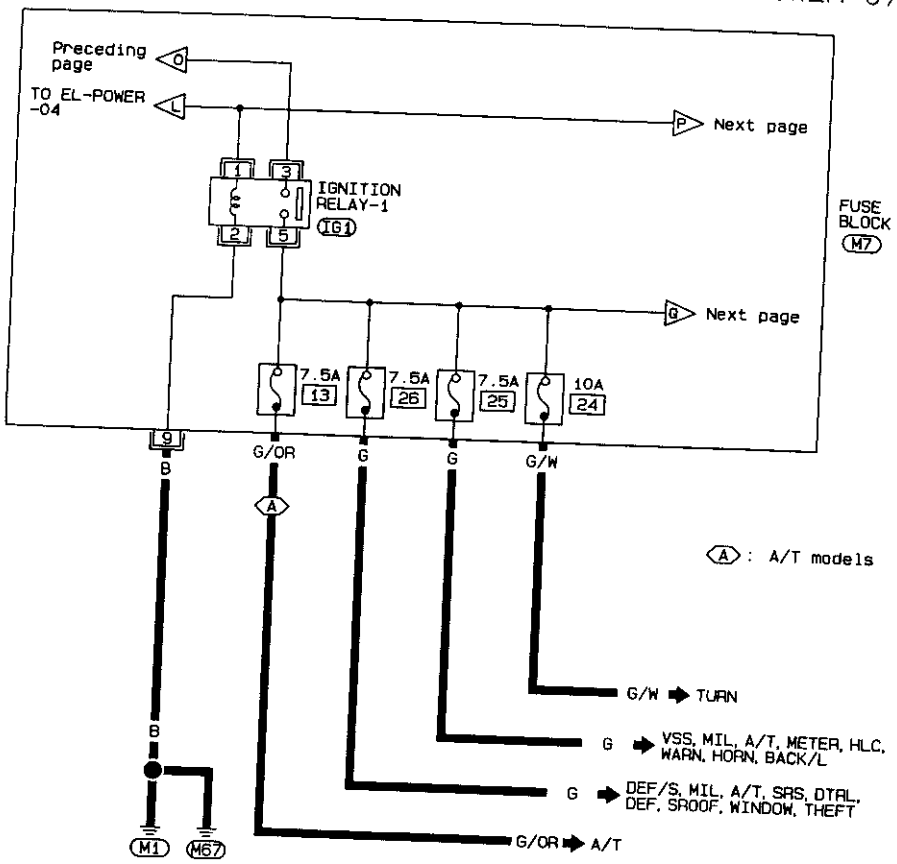

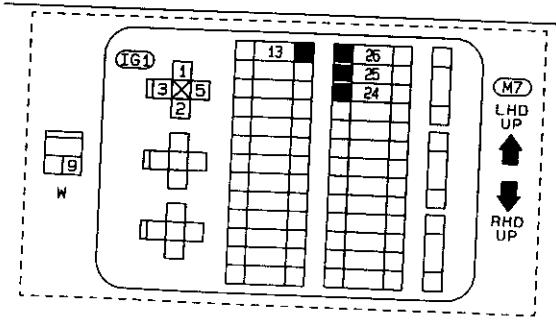

SEL674T

EL-POWER-08

Ⓛ : LHD models
Ⓡ : RHD models
ⓔⓤ : For Europe
*10 ··· Ⓛ 29 , Ⓡ 28
*11 ··· Ⓛ R/L , Ⓡ L

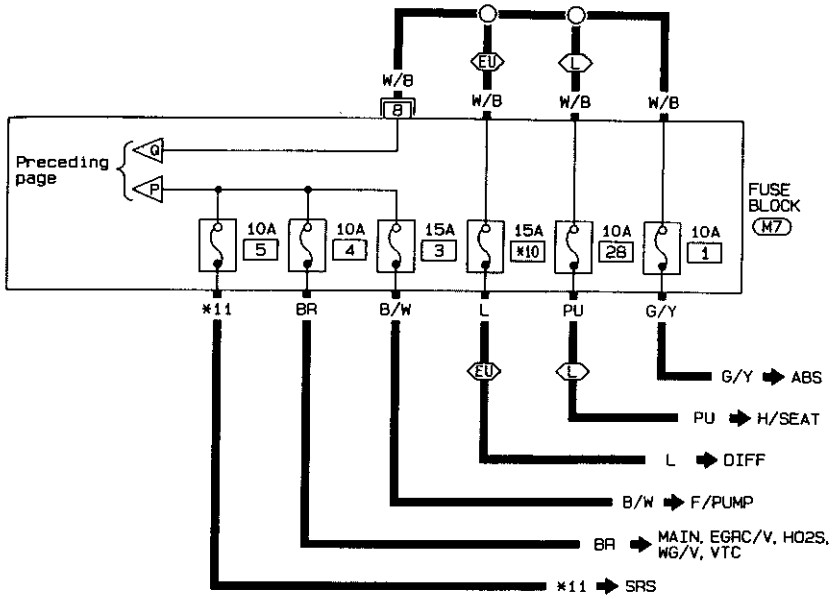

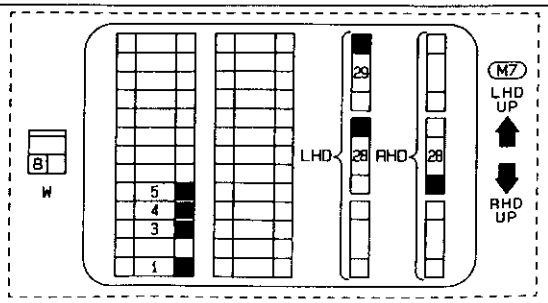

SEL675T

Wiring Diagram — POWER — (Cont'd)

EL-POWER-09

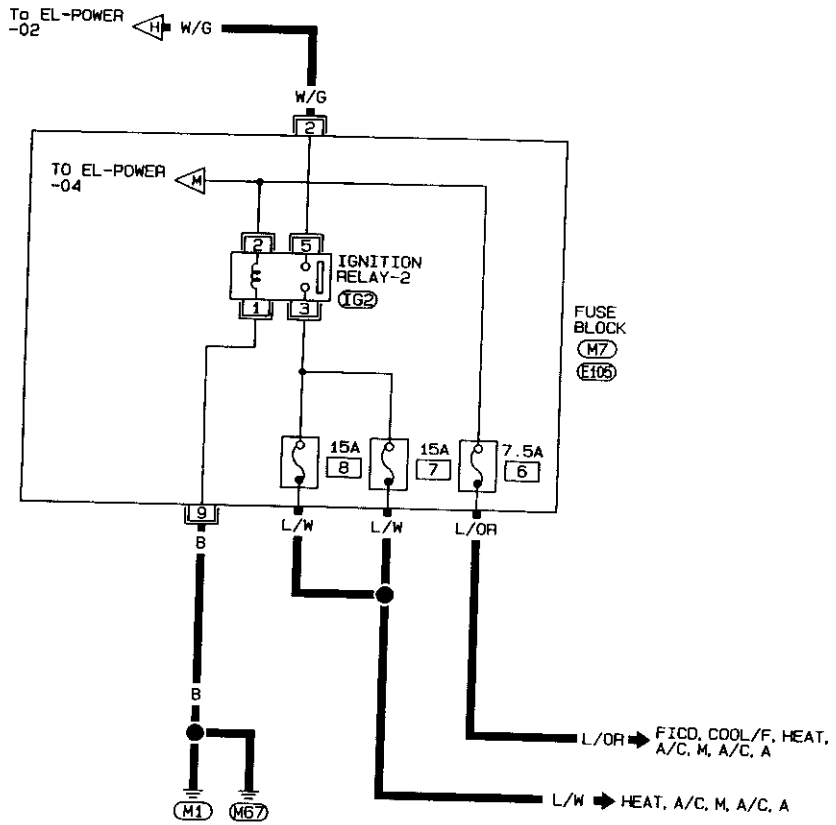

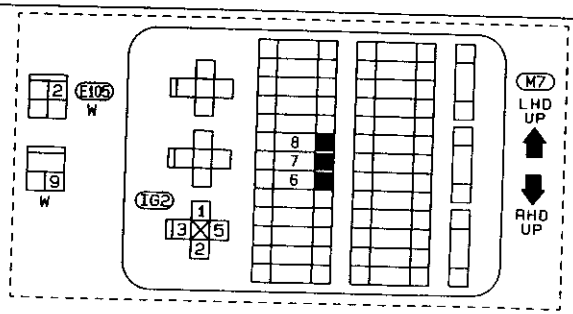

SEL676T

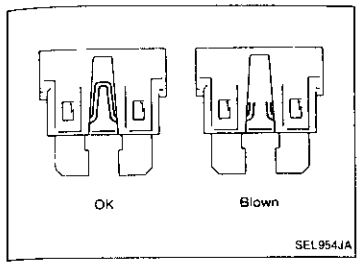

Fuse

- **If fuse is blown, be sure to eliminate cause of problem before installing new fuse.**
- **Use fuse of specified rating. Never use fuse of more than specified rating.**
- **Do not partially install fuse; always insert it into fuse holder properly.**
- **Remove fuse for clock if vehicle is not used for a long period of time.**

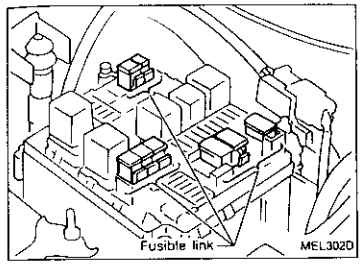

Fusible Link

A melted fusible link can be detected either by visual inspection or by feeling with finger tip. If its condition is questionable, use circuit tester or test lamp.

CAUTION:

- **If fusible link should melt, it is possible that critical circuit (power supply or large current carrying circuit) is shorted. In such a case, carefully check and eliminate cause of problem.**
- **Never wrap outside of fusible link with vinyl tape. Important: Never let fusible link touch any other wiring harness, vinyl or rubber parts.**

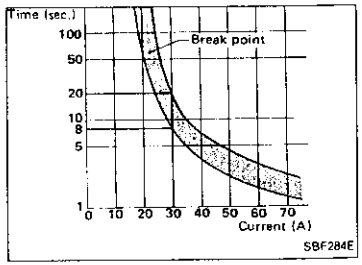

Circuit Breaker

For example, when current is 30A, the circuit is broken within 8 to 20 seconds.

Circuit breakers are used in the following systems.

- Power window
- Power door lock
- Power sun roof
- Multi-remote control
- Theft warning
- Warning buzzer
- Rear window defogger and mirror defogger

CAUTION:
- **If it becomes necessary to start the engine with a booster battery and jumper cables, use a 12-volt booster battery.**
- **After connecting battery cables, ensure that they are tightly clamped to battery terminals for good contact.**
- **Never add distilled water through the hole used to check specific gravity.**

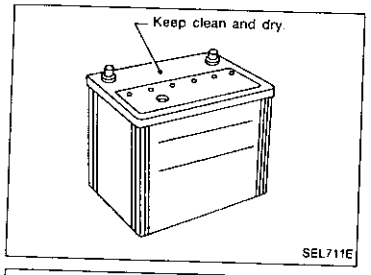

How to Handle Battery

METHODS OF PREVENTING OVER-DISCHARGE

The following precautions must be taken to prevent over-discharging a battery.
- The battery surface (particularly its top) should always be kept clean and dry.
- The terminal connections should be clean and tight.
- At every routine maintenance, check the electrolyte level.

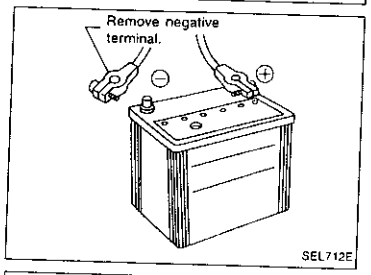

- When the vehicle is not going to be used over a long period of time, disconnect the negative battery terminal. (If the vehicle has an extended storage switch, turn it off.)

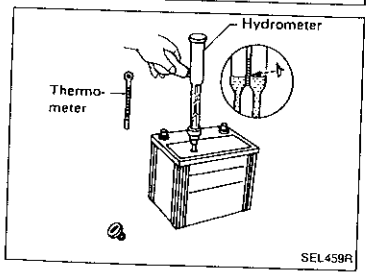

- Check the charge condition of the battery.
  Periodically check the specific gravity of the electrolyte. Keep a close check on charge condition to prevent over-discharge.

CHECKING ELECTROLYTE LEVEL

WARNING:

Do not allow battery fluid to come in contact with skin, eyes, fabrics, or painted surfaces. After touching a battery, do not touch or rub your eyes until you have thoroughly washed your hands. If the acid contacts the eyes, skin or clothing, immediately flush with water for 15 minutes and seek medical attention.

How to Handle Battery (Cont'd)

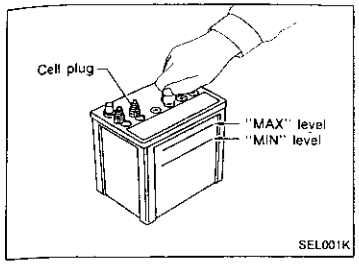

- Remove the cell plug using a suitable tool.
- Add distilled water up to the MAX level.

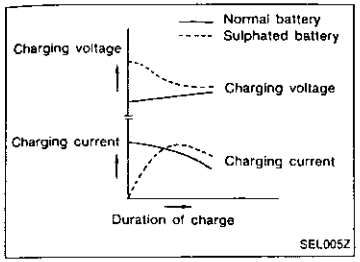

SULPHATION

A battery will be completely discharged if it is left unattended for a long time and the specific gravity becomes less than 1.100. This may result in sulphation on the cell plates.
To find if a discharged battery has been sulphated, pay attention to its voltage and current when charging it.
As shown in the figure at left, if the battery has been "sulphated", less current and higher voltage may be observed in the initial stage of charging.

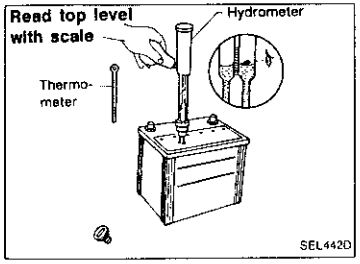

SPECIFIC GRAVITY CHECK

1. Read hydrometer and thermometer indications at eye level.

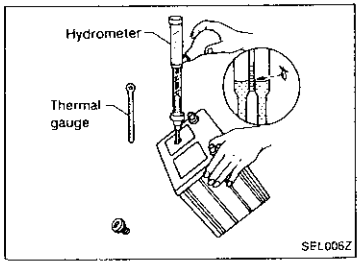

- When electrolyte level is too low, tilt battery case to raise it for easy measurement.

How to Handle Battery (Cont'd)

2. Convert into specific gravity at 20°C (68°F).

Example:

- When electrolyte temperature is 35°C (95°F) and specific gravity of electrolyte is 1.230, converted specific gravity at 20°C (68°F) is 1.240.
- When electrolyte temperature is 0°C (32°F) and specific gravity of electrolyte is 1.210, converted specific gravity at 20°C (68°F) is 1.196.

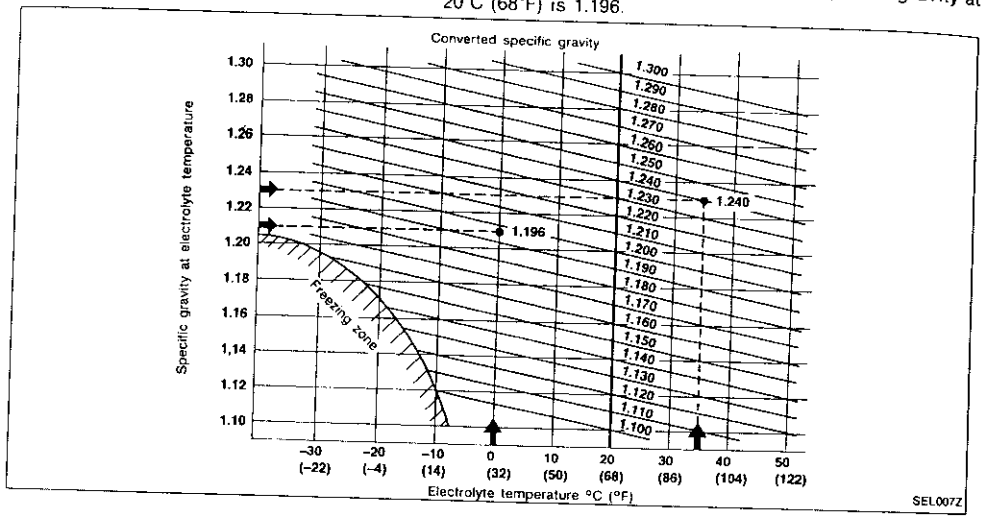

Battery Test and Charging Chart

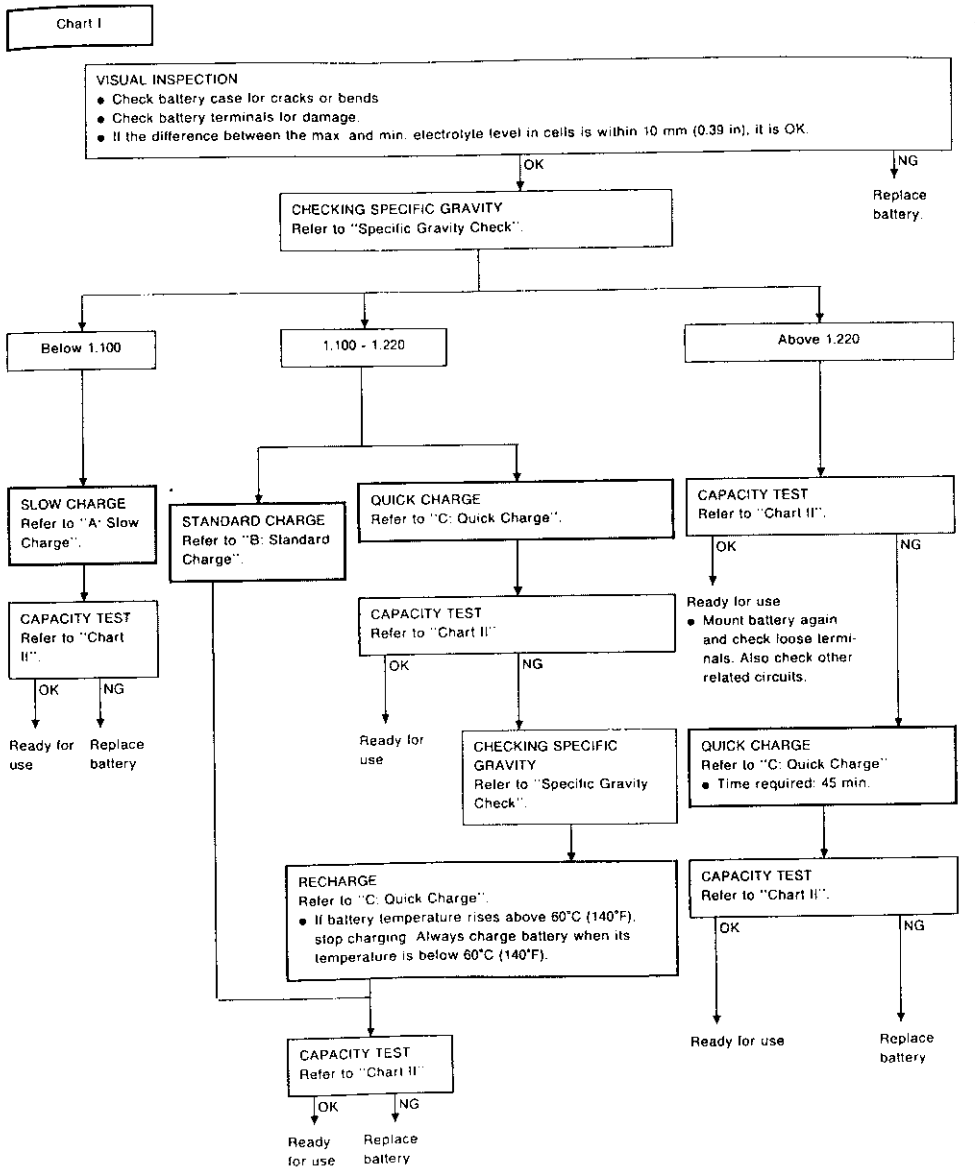

* "STANDARD CHARGE" is recommended if the vehicle is in storage after charging.

Battery Test and Charging Chart (Cont'd)

Chart II

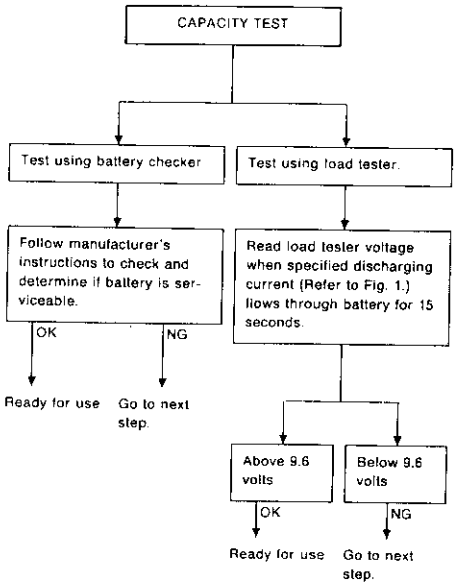

- Check battery type and determine the specified current using the following table.

Fig. 1 DISCHARGING CURRENT (Load Tester)

Type	Current (A)
28B19R(L)	90
34B19R(L)	99
46B24R(L)	135
55B24R(L)	135
50D23R(L)	150
55D23R(L)	180
65D26R(L)	195
80D26R(L)	195
75D31R(L)	210
95D31R(L)	240
115D31R(L)	240
95E41R(L)	300
130E41R(L)	330

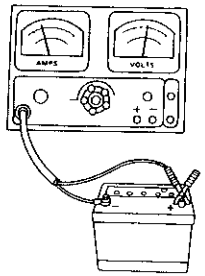

SEL008Z

Battery Test and Charging Chart (Cont'd)

A: SLOW CHARGE

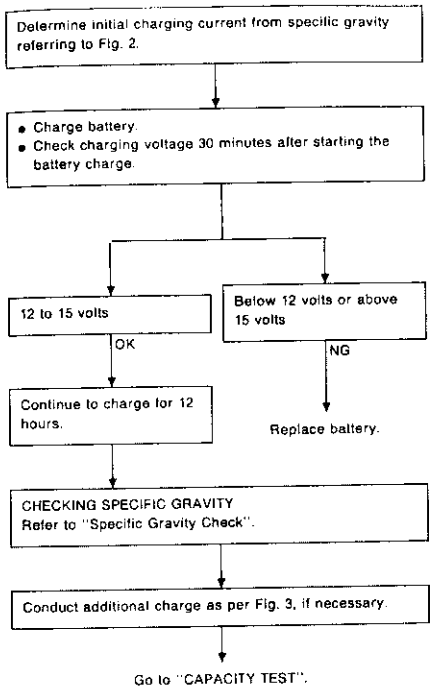

Fig. 2 INITIAL CHARGING CURRENT SETTING (Slow charge)

CONVERTED SPECIFIC GRAVITY	BATTERY TYPE										
	28B19R(L)	34B19R(L)	46B24R(L)	55B24R(L)	50D23R(L)	55D23R(L)	65D26R(L)	80D26R(L)	75D31R(L)	95D31R(L)	115D31R(L)	95E41R(L)	130E41R(L)
Below 1.100	4.0 (A)		5.0 (A)		7.0 (A)		8.0 (A)		9.0 (A)	10.0 (A)			14.0 (A)

- Check battery type and determine the specified current using the table shown above.
- After starting charging, adjustment of charging current is not necessary.

Fig. 3 ADDITIONAL CHARGE (Slow charge)

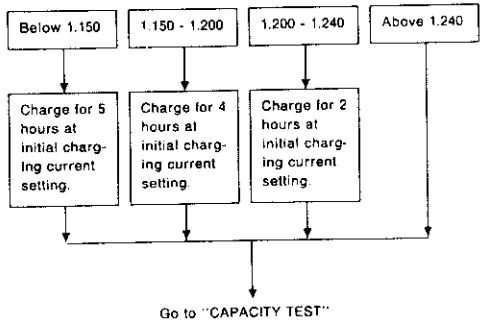

CAUTION:

- **Set charging current to value specified in Fig. 2. If charger is not capable of producing specified current value, set its charging current as close to that value as possible.**
- **Keep battery away from open flame while it is being charged.**
- **When connecting charger, connect leads first, then turn on charger. Do not turn on charger first, as this may cause a spark.**
- **If battery temperature rises above 60°C (140°F), stop charging. Always charge battery when its temperature is below 60°C (140°F).**

Battery Test and Charging Chart (Cont'd)

B: STANDARD CHARGE

Determine initial charging current from specific gravity, referring to Fig. 4.

Charge battery for 8 hours.

CHECKING SPECIFIC GRAVITY
Refer to "Specific Gravity Check".

Conduct additional charge as per Fig. 5, if necessary.

Go to "CAPACITY TEST".

Fig. 4 INITIAL CHARGING CURRENT SETTING (Standard charge)

CONVERTED SPECIFIC GRAVITY	BATTERY TYPE										
	28B19R(L)	34B19R(L)	46B24R(L)	55B24R(L)	50D23R(L)	55D23R(L)	65D26R(L)	80D26R(L)	75D31R(L)	95D31R(L) 115D31R(L)	95E41R(L) 130E41R(L)
1.100 - 1.130	4.0 (A)	5.0 (A)	6.0 (A)	7.0 (A)	8.0 (A)	9.0 (A)					13.0 (A)
1.130 - 1.160	3.0 (A)	4.0 (A)	5.0 (A)	6.0 (A)	7.0 (A)	8.0 (A)					11.0 (A)
1.160 - 1.190	2.0 (A)	3.0 (A)	4.0 (A)	5.0 (A)	6.0 (A)	7.0 (A)					9.0 (A)
1.190 - 1.220	2.0 (A)	2.0 (A)	3.0 (A)	4.0 (A)	5.0 (A)	5.0 (A)					7.0 (A)

- Check battery type and determine the specified current using the table shown above.
- After starting charging, adjustment of charging current is not necessary

Fig. 5 ADDITIONAL CHARGE (Standard charge)

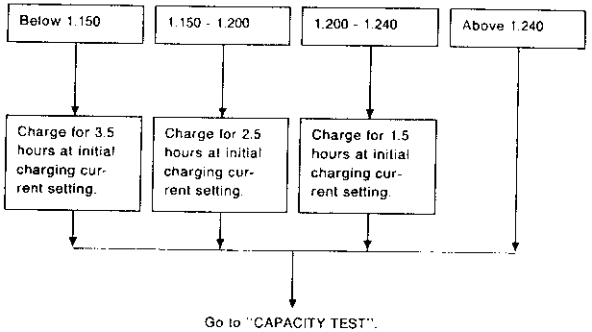

CAUTION:

- **Do not use standard charge method on a battery whose specific gravity is less than 1.100.**
- **Set charging current to value specified in Fig. 4. If charger is not capable of producing specified current value, set its charging current as close to that value as possible.**
- **Keep battery away from open flame while it is being charged.**
- **When connecting charger, connect leads first, then turn on charger. Do not turn on charger first, as this may cause a spark.**
- **If battery temperature rises above 60°C (140°F), stop charging. Always charge battery when its temperature is below 60°C (140°F).**

Battery Test and Charging Chart (Cont'd)

C: QUICK CHARGE

Determine initial charging current setting and charging time from specific gravity, referring to Fig. 6.

Charge battery.

Go to "CAPACITY TEST".

Fig. 6 INITIAL CHARGING CURRENT SETTING AND CHARGING TIME (Quick charge)

BATTERY TYPE		28B19R(L) 34B19R(L)	46B24R(L) 55B24R(L) 50D23R(L)	55D23R(L) 65D26R(L) 80D26R(L)	75D31R(L) 95D31R(L) 115D31R(L) 95E41R(L)	130E41R(L)
CURRENT [A]		10 (A)	15 (A)	20 (A)	30 (A)	40 (A)
CONVERTED SPECIFIC GRAVITY	1.100 - 1.130	2.5 hours				
	1.130 - 1.160	2.0 hours				
	1.160 - 1.190	1.5 hours				
	1.190 - 1.220	1.0 hours				
	Above 1.220	0.75 hours (45 min.)				

- Check battery type and determine the specified current using the table shown above.
- After starting charging, adjustment of charging current is not necessary.

CAUTION:

- **Do not use quick charge method on a battery whose specific gravity is less than 1.100.**
- **Set initial charging current to value specified in Fig. 6. If charger is not capable of producing specified current value, set its charging current as close to that value as possible.**
- **Keep battery away from open flame while it is being charged.**
- **When connecting charger, connect leads first, then turn on charger. Do not turn on charger first, as this may cause a spark.**
- **Be careful of a rise in battery temperature because a large current flow is required during quick-charge operation.**
  If battery temperature rises above 60°C (140°F), stop charging. Always charge battery when its temperature is below 60°C (140°F).
- **Do not exceed the charging time specified in Fig. 6, because charging battery over the charging time can cause deterioration of the battery.**

Service Data and Specifications (SDS)

Applied model	For Europe	Except for Europe	Optional on LHD models for Europe
Type	55D23R	65D26R	80D26R
Capacity	12 - 60	12 - 65	12 - 65

System Description

M/T MODELS

Power is supplied at all times
- to ignition switch terminal ①
- through 30A fusible link (letter h, located in the fusible link and fuse box).

For models with theft warning system

Power is supplied at all times
- through 7.5A fuse (No. 26, located in the fuse block)
- to theft warning relay terminal ①.

With the ignition switch in the START position, power is supplied
- from ignition switch terminal ⑤
- to theft warning relay terminal ③.

If the theft warning system is triggered, terminal ② of the theft warning relay is grounded and power to the starter motor is interrupted.

When the theft warning system is not operating, power is supplied
- through theft warning relay terminal ④
- to terminal ② of the starter motor windings.

For models without theft warning system

With the ignition switch in the START position, power is supplied
- from ignition switch terminal ⑤
- directly to terminal ② of the starter motor windings.

The starter motor plunger closes and provides a closed circuit between the battery and the starter motor. The starter motor is grounded to the engine block. With power and ground supplied, cranking occurs and the engine starts.

A/T MODELS

Power is supplied at all times
- to ignition switch terminal ①
- through 30A fusible link (letter h, located in the fusible link and fuse box).

For models with theft warning system

Power is supplied at all times
- through 7.5A fuse (No. 26, located in the fuse block)
- to theft warning relay terminal ①.

With the ignition switch in the START position, power is supplied
- from ignition switch terminal ⑤
- to theft warning relay terminal ③.

If the theft warning system is triggered, terminal ② of the theft warning relay is grounded and power to the inhibitor switch is interrupted.

When the theft warning system is not operating, power is supplied
- through theft warning relay terminal ④
- to inhibitor switch terminal ②
- through inhibitor switch terminal ①, with the selector lever in the P or N position
- to terminal ② of the starter motor windings.

For models without theft warning system

With the ignition switch in the START position, power is supplied
- from ignition switch terminal ⑤
- to inhibitor switch terminal ②
- through inhibitor switch terminal ①, with the selector lever in the P or N position
- to terminal ② of the starter motor windings.

The starter motor plunger closes and provides a closed circuit between the battery and starter motor. The starter motor is grounded to the engine block. With power and ground supplied, cranking occurs and the engine starts.

Wiring Diagram — START —

M/T MODELS

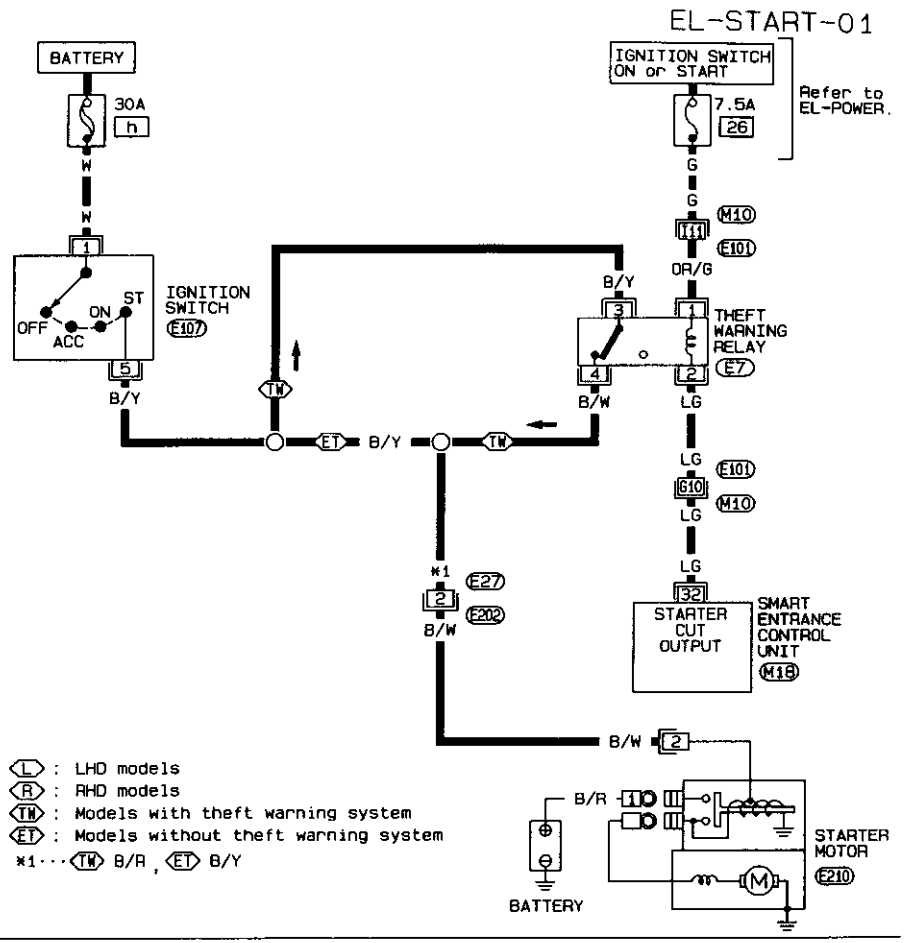

SEL662T

Wiring Diagram — START — (Cont'd)

A/T MODELS

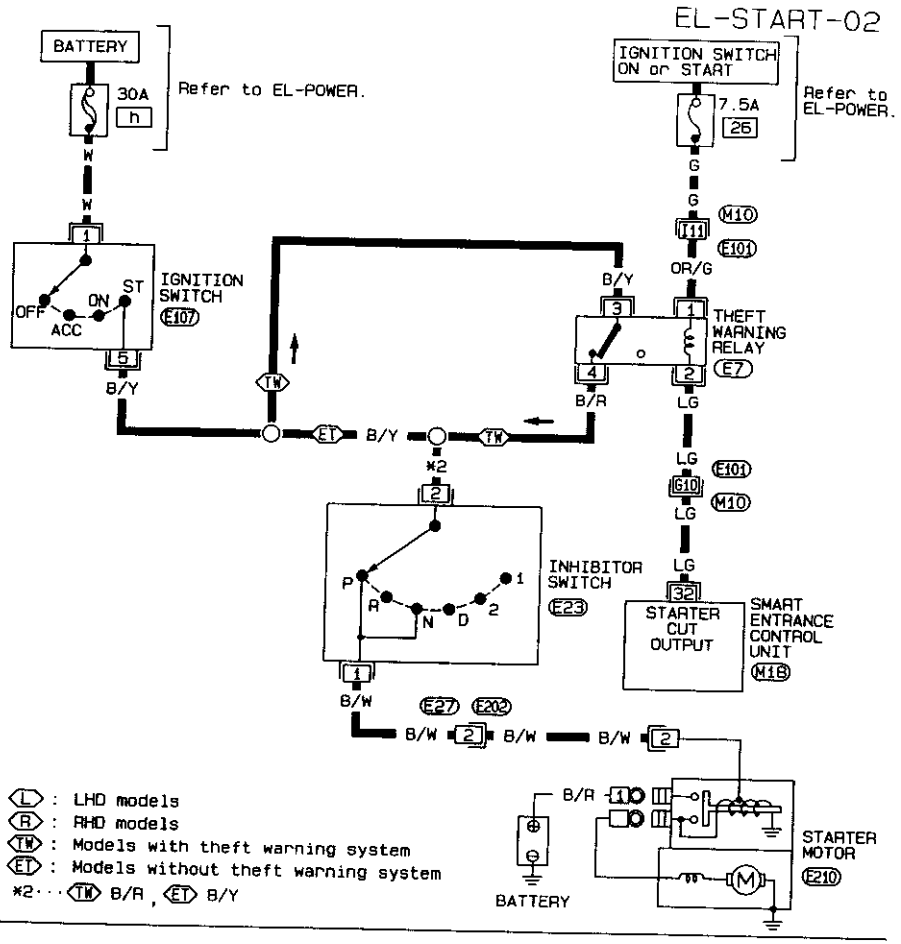

Ⓛ : LHD models
Ⓡ : RHD models
TW : Models with theft warning system
ET : Models without theft warning system
*2 ··· TW B/R , ET B/Y

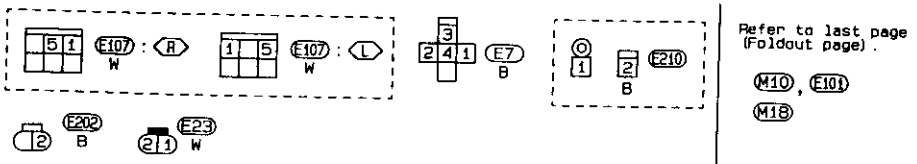

Refer to last page (Foldout page).
M10, E101
M18

SEL663T

Trouble-shooting

If any abnormality is found, immediately disconnect battery negative terminal.

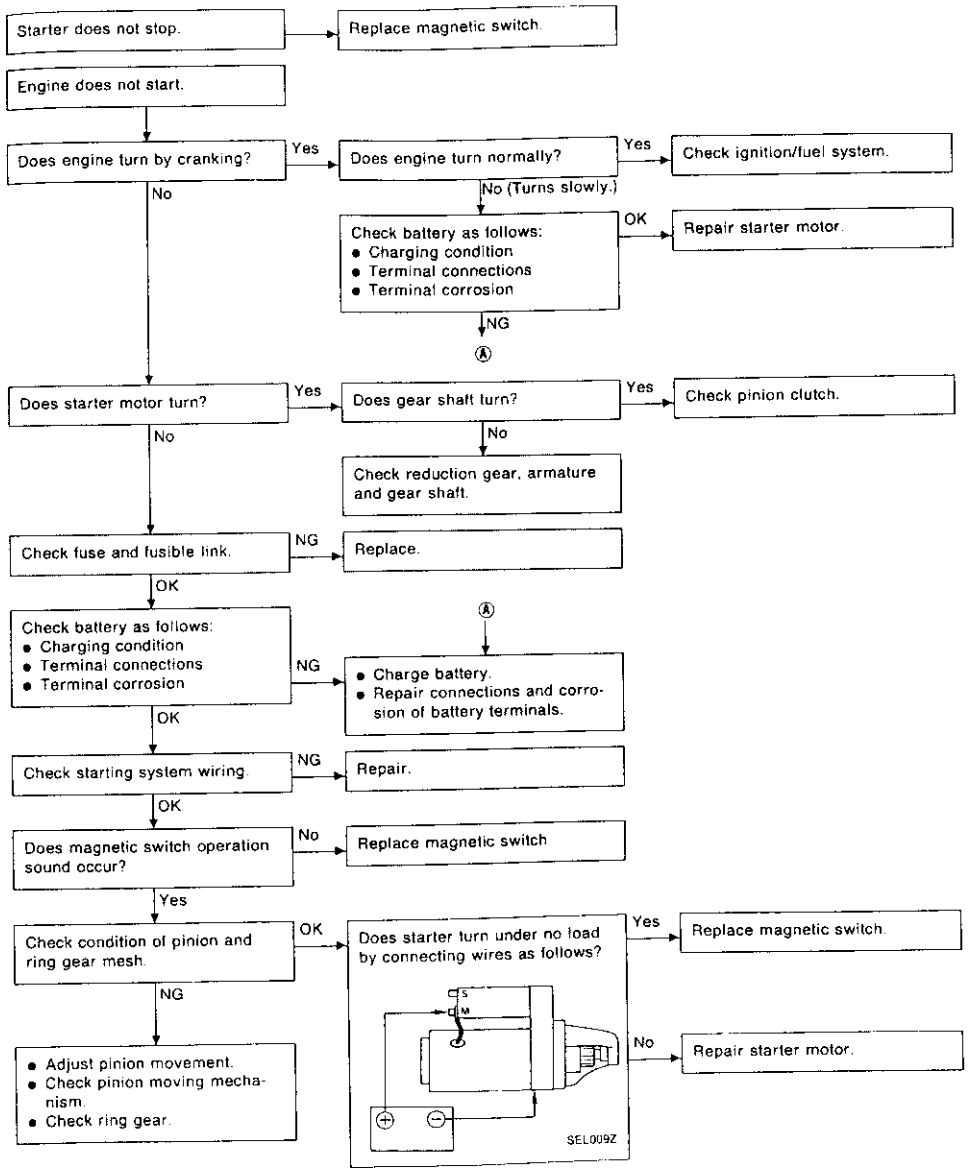

Construction

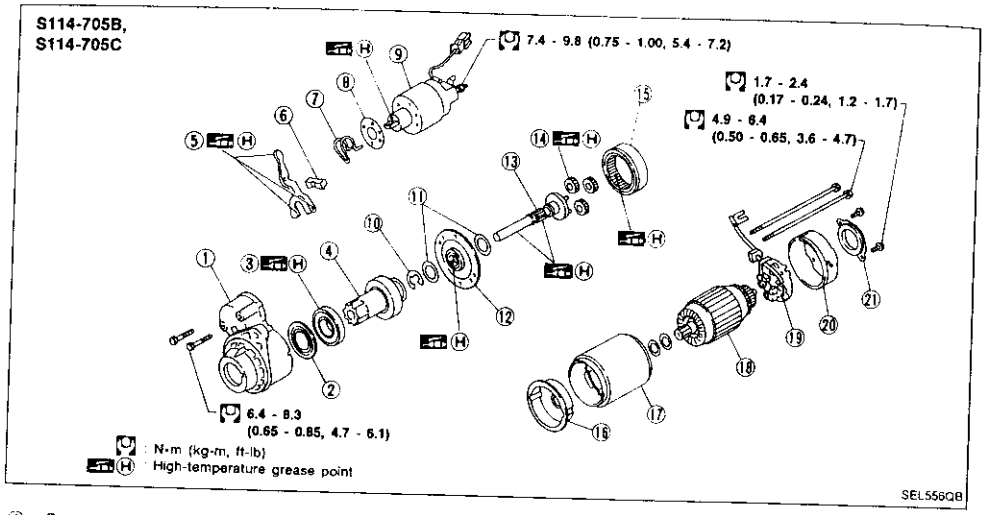

① Gear case
② Bearing cover
③ Ball bearing
④ Pinion assembly
⑤ Shift lever
⑥ Dust cover
⑦ Torsion spring
⑧ Adjusting plate
⑨ Magnetic switch assembly
⑩ E-ring
⑪ Thrust washer
⑫ Center bracket
⑬ Pinion shaft
⑭ Planetary gear
⑮ Internal gear
⑯ Center bracket
⑰ Yoke assembly
⑱ Armature
⑲ Brush holder assembly
⑳ Rear cover
㉑ Dust cover

Removal and Installation

REMOVAL

1. Remove battery negative cable from battery.
2. Remove transmission harness bracket.
3. Remove battery cable from starter motor.
4. Disconnect harness connector from starter motor harness.
5. Remove starter motor from under vehicle.

INSTALLATION

Installation procedure is basically the reverse order of removal.

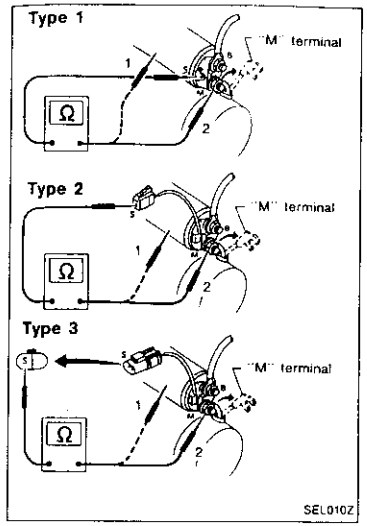

Magnetic Switch Check

- Before starting to check, disconnect battery ground cable.
- Disconnect "M" terminal of starter motor.

1. Continuity test (between "S" terminal and switch body).
   - No continuity ... Replace.
2. Continuity test (between "S" terminal and "M" terminal).
   - No continuity ... Replace.

Pinion/Clutch Check

1. Inspect pinion teeth.
   - Replace pinion if teeth are worn or damaged. (Also check condition of ring gear teeth.)
2. Inspect reduction gear teeth.
   - Replace reduction gear if teeth are worn or damaged. (Also check condition of armature shaft gear teeth.)
3. Check to see if pinion locks in one direction and rotates smoothly in the opposite direction.
   - If it locks or rotates in both directions, or unusual resistance is evident. ... Replace.

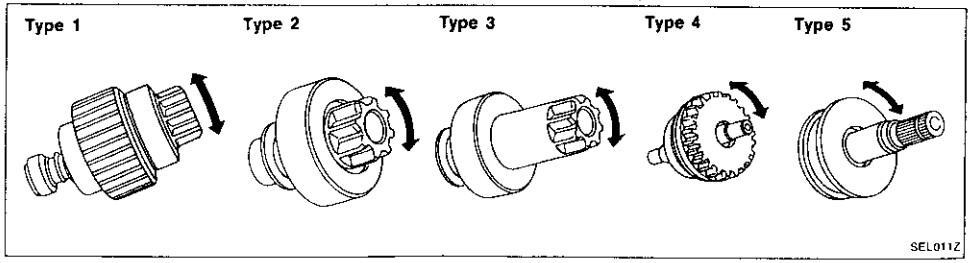

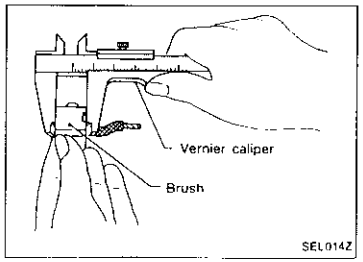

Brush Check

BRUSH

Check wear of brush.

Wear limit length:
Refer to SDS. (EL-37)

- Excessive wear ... Replace.

Brush Check (Cont'd)

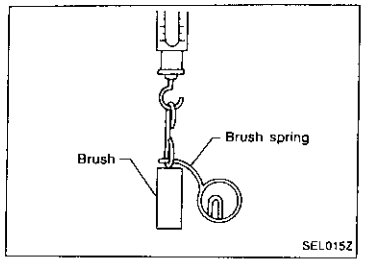

BRUSH SPRING PRESSURE

Check brush spring pressure with brush spring detached from brush.

Spring pressure (with new brush):
Refer to SDS. (EL-37)

- Not within the specified values ... Replace.

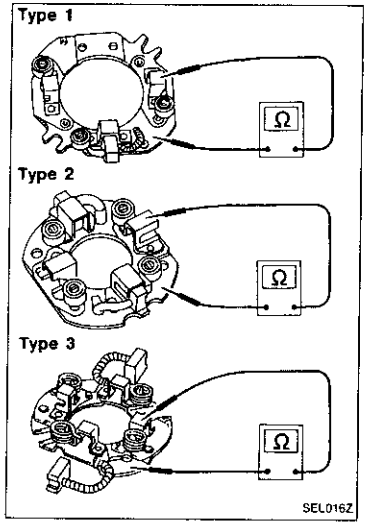

BRUSH HOLDER

1. Perform insulation test between brush holder (positive side) and its base (negative side).
- Continuity exists. ... Replace.
2. Check brush to see if it moves smoothly.
- If brush holder is bent, replace it; if sliding surface is dirty, clean.

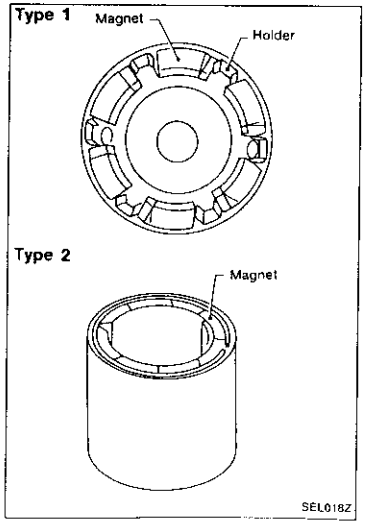

Yoke Check

Magnet is secured to yoke by bonding agent. Check magnet to see that it is secured to yoke and for any cracks. Replace malfunctioning parts as an assembly.
Holder may move slightly as it is only inserted and not bonded.
CAUTION:
Do not clamp yoke in a vice or strike it with a hammer.

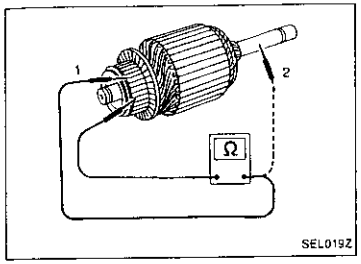

Armature Check

1. Continuity test (between two segments side by side).
- No continuity ... Replace.
2. Insulation test (between each commutator bar and shaft).
- Continuity exists. ... Replace.

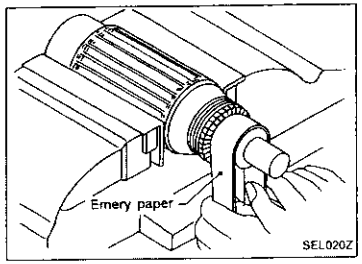

3. Check commutator surface.
- Rough ... Sand lightly with No. 500 - 600 emery paper.

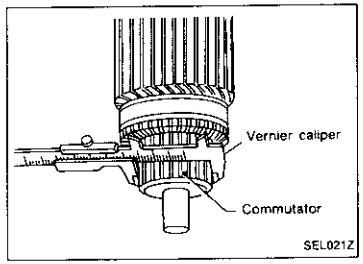

4. Check diameter of commutator.
Commutator minimum diameter:
Refer to SDS. (EL-37)
- Less than specified value ... Replace.

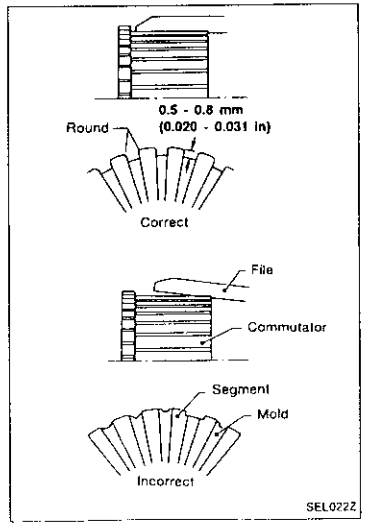

5. Check depth of insulating mold from commutator surface.
- Less than 0.2 mm (0.008 in) ... Undercut to 0.5 to 0.8 mm (0.020 to 0.031 in)

Assembly

Apply high-temperature grease to lubricate the bearing, gears and frictional surface when assembling the starter.
Carefully observe the following instructions.

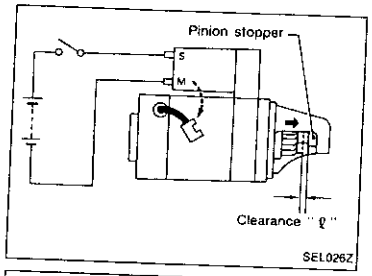

PINION PROTRUSION LENGTH ADJUSTMENT

With pinion driven out by magnetic switch, push pinion back to remove slack and measure clearance "ℓ" between the front edge of the pinion and the pinion stopper.

Clearance "ℓ":
Refer to SDS. (EL-37)

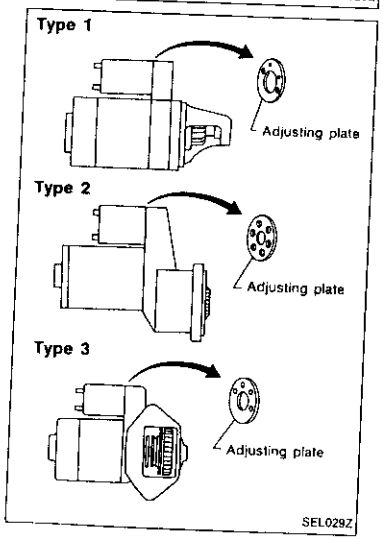

- Not in the specified value ... Adjust by adjusting plate.

Service Data and Specifications (SDS)

STARTER

Type			S114-705B S114-705C
			HITACHI make
			Reduction gear
System voltage		V	12
No-load	Terminal voltage	V	11.0
	Current	A	Less than 90
	Revolution	rpm	More than 2,950
Minimum length of brush		mm (in)	11.0 (0.433)
Brush spring tension (With new brush)		N (kg, lb)	17.6 - 21.6 (1.80 - 2.20, 3.96 - 4.86)
Minimum diameter of commutator		mm (in)	32.0 (1.260)
Clearance between pinion front edge and pinion stopper		mm (in)	0.3 - 1.5 (0.012 - 0.059)
Clearance between bearing metal and armature shaft		mm (in)	Less than 0.2 (0.008)

System Description

The alternator provides DC voltage to operate the vehicle's electrical system and to keep the battery charged. The voltage output is controlled by the IC regulator.

Power is supplied at all times to alternator terminal Ⓢ through:

- 100A fusible link (letter [a], located in the fusible link and fuse box), and
- 7.5A fuse (No. [41], located in the fusible link and fuse box).

Terminal Ⓑ supplies power to charge the battery and operate the vehicle's electrical system. Output voltage is controlled by the IC regulator at terminal Ⓢ detecting the input voltage. The charging circuit is protected by the 100A fusible link.

Terminal Ⓔ of the alternator supplies ground through body ground (E206).

With the ignition switch in the ON or START position, power is supplied

- through 7.5A fuse (No. [25], located in the fuse block)
- to combination meter terminal ㉑ for the charge warning lamp.

Ground is supplied to terminal ⑮ of the combination meter through terminal Ⓛ of the alternator. With power and ground supplied, the charge warning lamp will illuminate. When the alternator is providing sufficient voltage with the engine running, the ground is opened and the charge warning lamp will go off.

If the charge warning lamp illuminates with the engine running, a fault is indicated.

Wiring Diagram — CHARGE —

EL-CHARGE-01

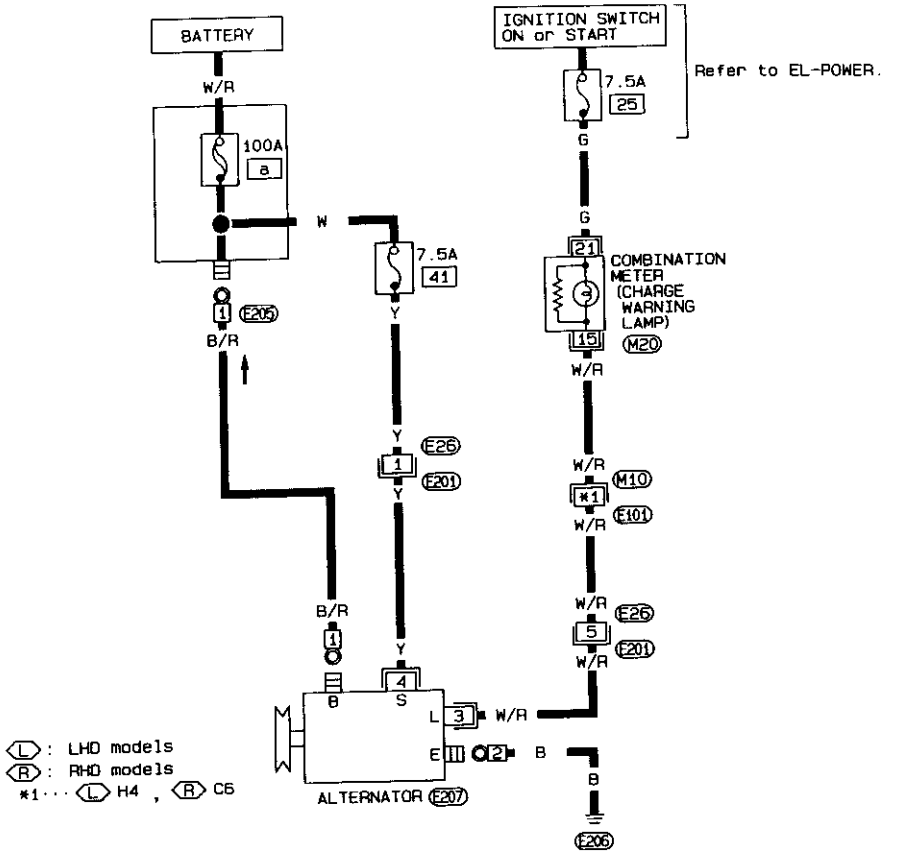

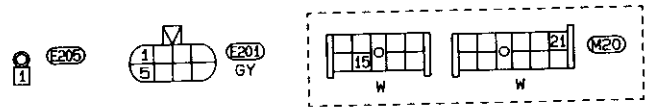

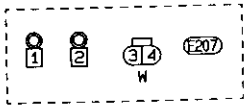

Refer to last page (Foldout page).
M10, E101

SEL664T

Trouble-shooting

Before conducting an alternator test, make sure that the battery is fully charged. A 30-volt voltmeter and suitable test probes are necessary for the test. The alternator can be checked easily by referring to the Inspection Table.

Before starting trouble-shooting, inspect the fusible link.

WITH IC REGULATOR

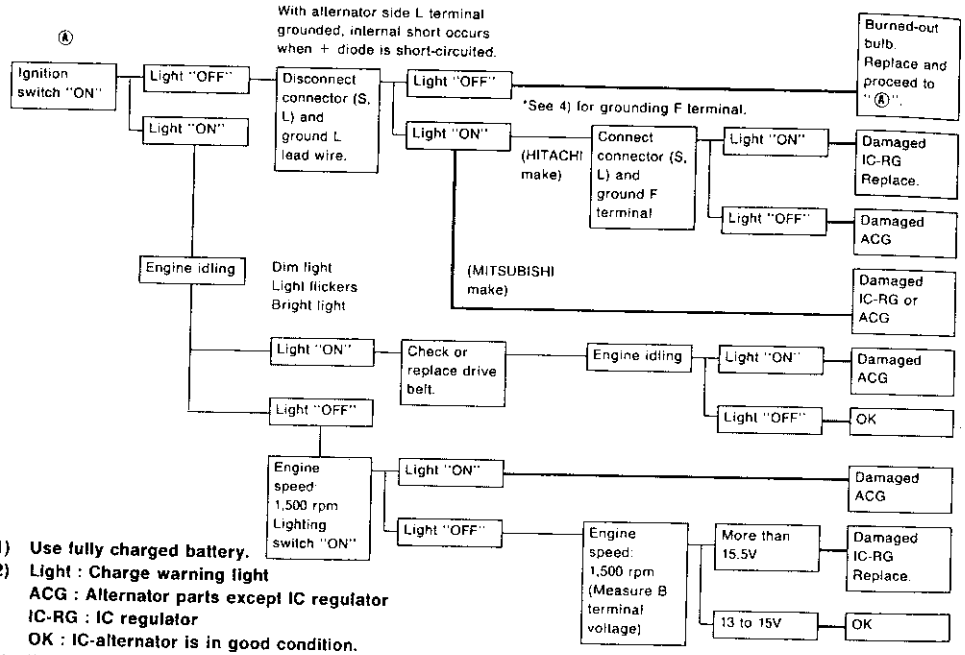

1) **Use fully charged battery.**
2) **Light : Charge warning light**
   ACG : Alternator parts except IC regulator
   IC-RG : IC regulator
   OK : IC-alternator is in good condition.
3) **When reaching "Damaged ACG", remove alternator from vehicle and disassembly, inspect and correct or replace faulty parts.**
4) ***Method of grounding F terminal (HITACHI make only)**

Gasoline engine model

Contact tip of wire with brush and attach wire to alternator body.

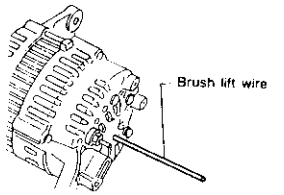

SEL030Z

5) **Terminals "S", "L", "B" and "E" are marked on rear cover of alternator.**

Construction

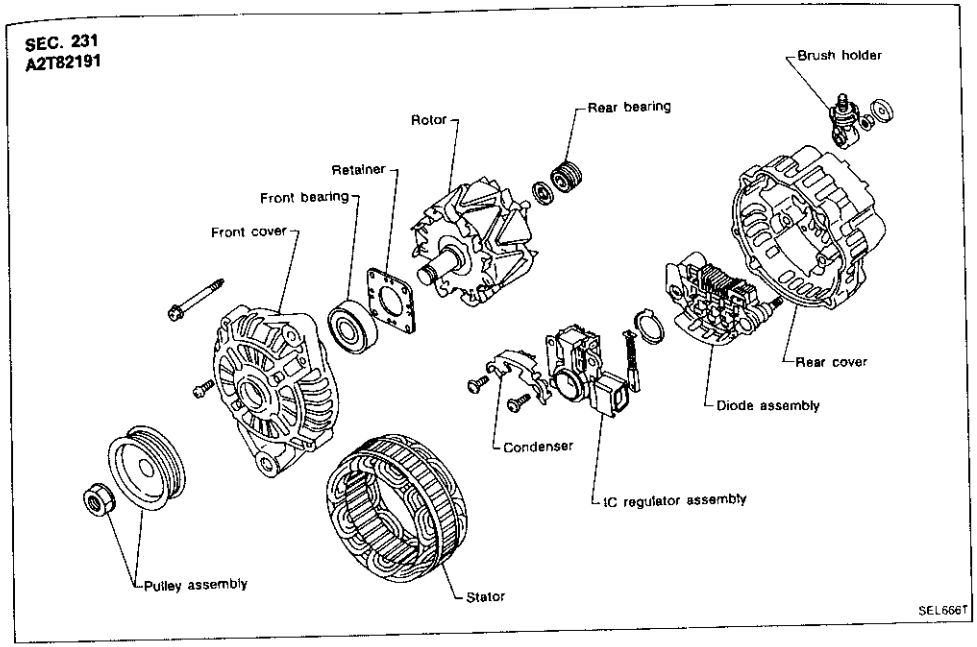

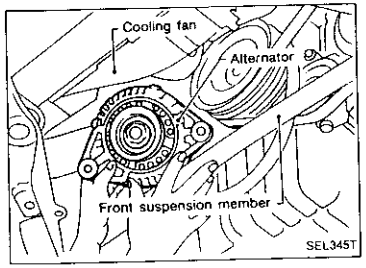

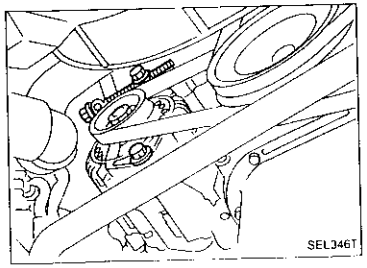

Removal and Installation

REMOVAL

1. Remove engine undercover.
2. Remove stabilizer bracket.
3. Remove power steering tube mounting bracket.
4. Remove drive belt from alternator.
5. Disconnect harness connector.
6. Remove cooling fan lower shroud.
7. Remove alternator.

INSTALLATION

To install, reverse the removal procedure.

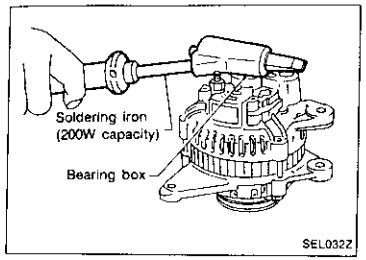

Disassembly

REAR COVER REMOVAL

CAUTION:

Rear cover may be hard to remove because a ring is used to lock outer race of rear bearing. To facilitate removal of rear cover, heat just bearing box section with a 200W soldering iron.

Do not use a heat gun, as it can damage diode assembly.

REAR BEARING

CAUTION:

- **Do not reuse rear bearing after removal. Replace with a new one.**
- **Do not lubricate rear bearing outer race.**

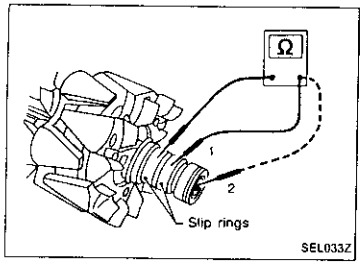

Rotor Check

1. Resistance test
   Resistance: Refer to SDS. (EL-45)
   - Not within the specified values ... Replace rotor.
2. Insulator test
   - Continuity exists ... Replace rotor.
3. Check slip ring for wear.
   Slip ring minimum outer diameter:
   Refer to SDS. (EL-45)
   - Not within the specified values ... Replace rotor.

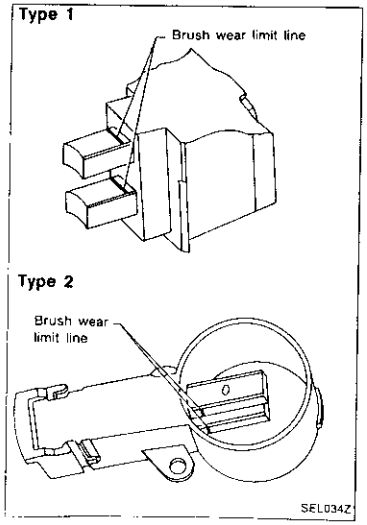

Brush Check

1. Check smooth movement of brush.
   - Not smooth ... Check brush holder and clean.
2. Check brush for wear.
   - Replace brush if it is worn down to the limit line.

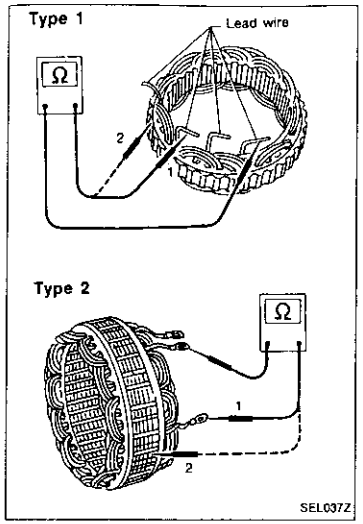

Stator Check

1. Continuity test
   - No continuity ... Replace stator.
2. Ground test
   - Continuity exists ... Replace stator.

Diode Check

MAIN DIODES

- Use an ohmmeter to check condition of diodes as indicated in chart below.
- If any of the test results is not satisfactory, replace diode assembly.

	Ohmmeter probes		Judgement
	Positive ⊕	Negative ⊖	
Diodes check (Positive side)	Positive diode plate	Diode terminals	Diode conducts in only one direction.
	Diode terminals	Positive diode plate	
Diodes check (Negative side)	Negative diode plate	Diode terminals	Diode conducts in only one direction.
	Diode terminals	Negative diode plate	

Type 1

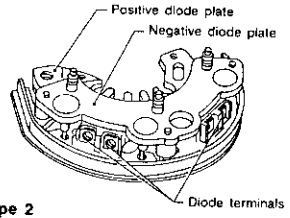

Type 2

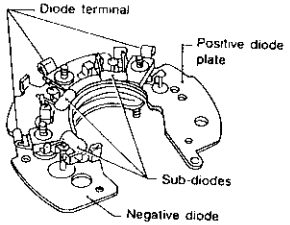

Type 3

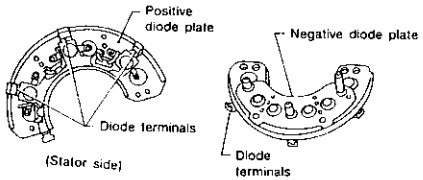

Type 4

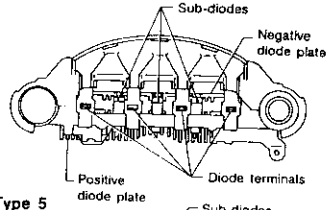

Type 5

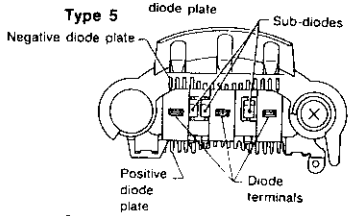

Type 6

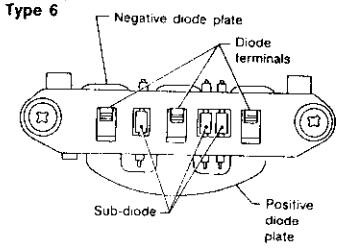

SEL039Z

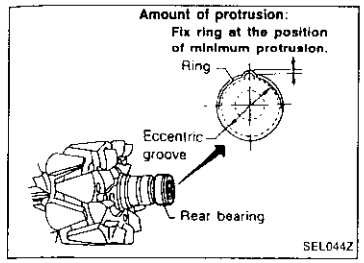

SEL044Z

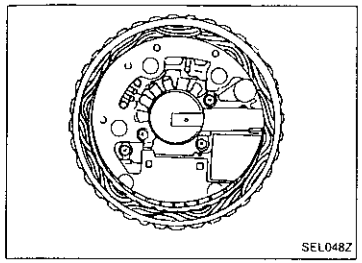

SEL048Z

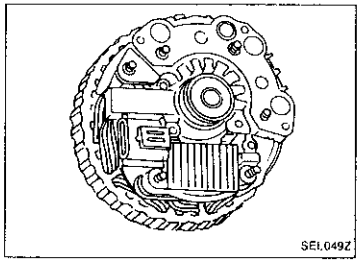

SEL049Z

Assembly

RING FITTING IN REAR BEARING

- Fix ring into groove in rear bearing so that it is as close to the adjacent area as possible.

CAUTION:
Do not reuse rear bearing after removal.

REAR COVER INSTALLATION

(1) Fit brush assembly, diode assembly, regulator assembly and stator.
(2) Push brushes up with fingers and install them to rotor.
Take care not to damage slip ring sliding surface.

Service Data and Specifications (SDS)

ALTERNATOR

Type		A2T82191 MITSUBISHI make
Nominal rating	V-A	12-90
Ground polarity		Negative
Minimum revolution under no-load (when 13.5 volts is applied)	rpm	Less than 1,300
Hot output current	A/rpm	More than 22/1,300 More than 67/2,500 More than 90/5,000
Regulated output voltage	V	14.1 - 14.7
Minimum length of brush	mm (in)	More than 5 (0.20)
Slip ring minimum outer diameter	mm (in)	More than 22.1 (0.870)
Rotor (field coil) resistance	Ω	2.5

Check

FOR EUROPE

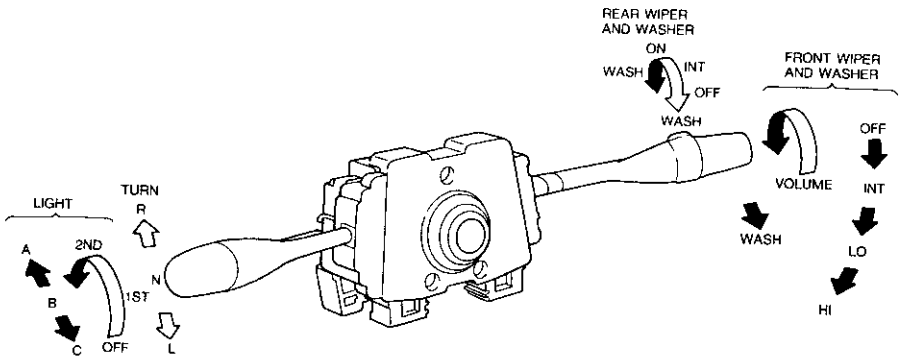

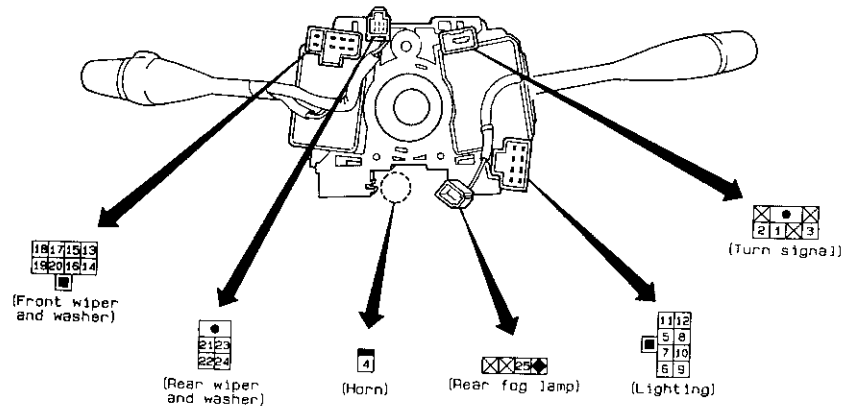

LIGHTING SWITCH

	OFF			1ST			2ND		
	A	B	C	A	B	C	A	B	C
5				○			○		
6				○			○	○	
7				○			○	○	○
8				○	○		○	○	○
9				○	○	○	○	○	○
10									
11				○	○	○	○	○	○
12				○	○	○	○	○	○

FRONT WIPER AND WASHER SWITCH

	OFF	INT	LO	HI	WASH
13		○			
14		○			○
15		○	○		
16		○	○		○
17		○	○	○	
18		○	○	○	○

REAR WIPER AND WASHER SWITCH

	WASH	OFF	INT	ON	WASH
21			○		
22					
23	○		○	○	○
24	○		○	○	○

TURN SIGNAL SWITCH

	R	N	L
1	○		
2		○	
3	○		

INTERMITTENT WIPER VOLUME

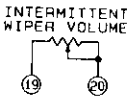

HORN SWITCH (Models without air bag system)

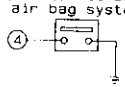

SEL677T

Check (Cont'd)

EXCEPT FOR EUROPE

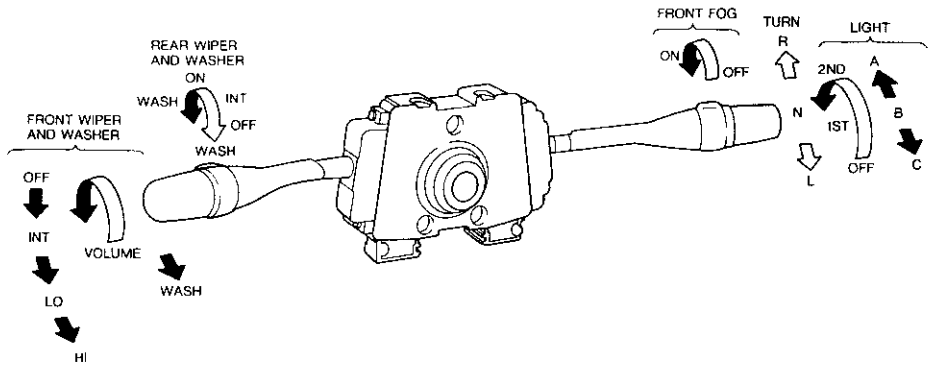

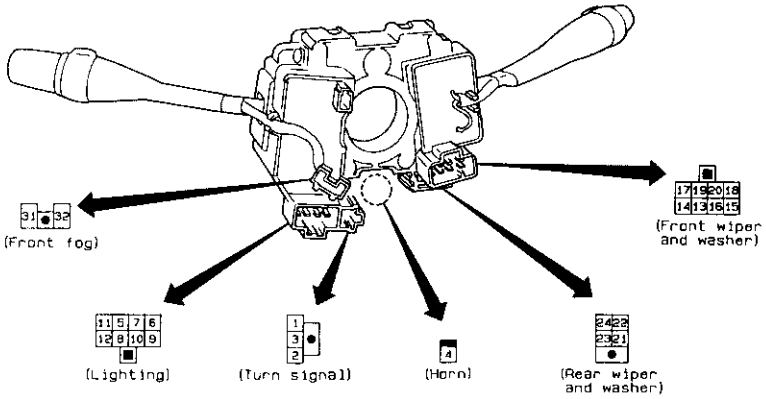

LIGHTING SWITCH

	OFF			1ST			2ND		
	A	B	C	A	B	C	A	B	C
5				○			○		
6				○			○	○	
7				○			○	○	○
8				○	○		○	○	○
9				○	○	○	○	○	○
10									
11				○	○	○	○	○	○
12				○	○	○	○	○	○

TURN SIGNAL SWITCH

	R	N	L
1	○		
2		○	
3	○		

FRONT FOG LAMP SWITCH

	OFF	ON
31		○
32		○

FRONT WIPER AND WASHER SWITCH

	OFF	INT	LO	HI	WASH
13		○			
14		○			○
15		○	○		
16		○	○		○
17		○	○	○	
18		○	○	○	○

INTERMITTENT WIPER VOLUME

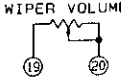

REAR WIPER AND WASHER SWITCH

	WASH	OFF	INT	ON	WASH
21			○		
22					
23	○		○	○	○
24	○		○	○	○

HORN SWITCH (Models without air bag system)

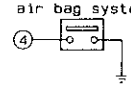

SEL678T

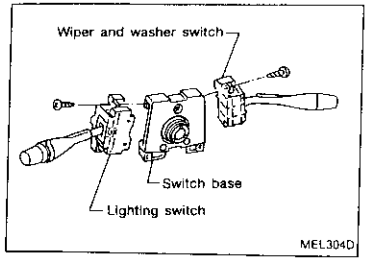

Replacement

- Each switch can be replaced without removing combination switch base.

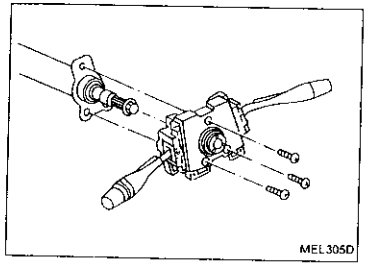

- To remove combination switch base, remove base attaching screw.

Bulb Replacement

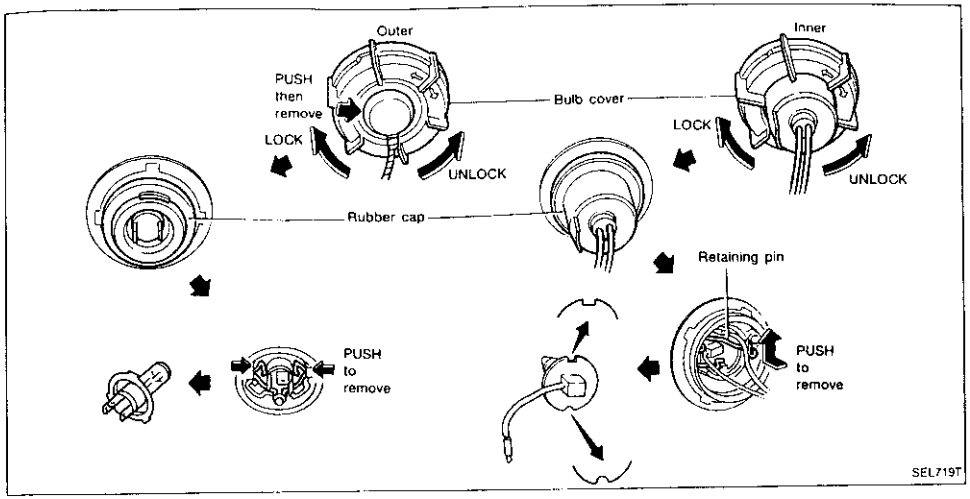

The headlamp is a semi-sealed beam type which uses a replaceable halogen bulb. The bulb can be replaced from the engine compartment side without removing the headlamp body.

- **Grasp only the plastic base when handling the bulb. Never touch the glass envelope.**

1. Disconnect the battery cable.
2. Disconnect harness connector from rear end of bulb (Outer).
3. Turn bulb cover counterclockwise, then remove it.
4. Pull off rubber cap.
5. Push and turn retaining pin to loosen it.
6. Remove headlamp bulb. Do not shake or rotate bulb when removing it.
7. Disconnect harness connector (Inner).
8. Install in the reverse order of removal.

CAUTION:

- **Do not leave headlamp reflector without bulb for a long period of time. Dust, moisture, smoke, etc. entering headlamp body may affect the performance of the headlamp. Remove headlamp bulb from the headlamp reflector just before a replacement bulb is installed.**

Bulb Specifications

Item	Wattage (W)
Outer (High/Low) (H4 type)	60/55
Inner (Low) (H3 type)	55

System Description

The headlamps are controlled by the lighting switch which is built into the combination switch.

MODELS FOR EUROPE

Power is supplied at all times
- to lighting switch terminal ⑤
- through 20A fuse (No. 37 , located in the fusible link and fuse box), and
- to lighting switch terminal ⑧
- through 20A fuse (No. 38 , located in the fusible link and fuse box).

Low beam operation

When the lighting switch is turned to the 2ND position and placed in LOW ("B") position, power is supplied
- from lighting switch terminal ⑩
- to terminal ③ of the LH headlamp, and
- from lighting switch terminal ⑦
- to terminal ③ of the RH headlamp.

Terminal ② of each headlamp supplies ground through body ground E43 or E57.
With power and ground supplied, the low beam headlamps will illuminate.

High beam operation/flash-to-pass operation

When the lighting switch is turned to the 2ND position and placed in HIGH ("A") position or PASS ("C") position, power is supplied
- from lighting switch terminal ⑥
- to terminals ① (Outer) and ④ (Inner) of RH headlamp, and
- from lighting switch terminal ⑨
- to terminals ① (Outer) and ④ (Inner) of LH headlamp, and
- to combination meter terminal ㊲ for the high beam indicator.

Ground is supplied to terminal ㊱ of the combination meter through body ground M1.
Terminals ② (Outer) and ⑤ (Inner) of headlamp supply ground through body ground E43 or E57.
With power and ground supplied, the high beams and the high beam indicator will illuminate.

MODELS EXCEPT FOR EUROPE

Power is supplied at all times
- to lighting switch terminal ⑤
- through 20A fuse (No. 36 , located in the fusible link and fuse box), and
- to lighting switch terminal ⑧
- through 20A fuse (No. 37 , located in the fusible link and fuse box).

Low beam operation

When the lighting switch is turned to the 2ND position and placed in LOW ("B") position, power is supplied
- from lighting switch terminal ⑦
- to terminal ③ of the LH headlamp, and
- from lighting switch terminal ⑩
- to terminal ③ of the RH headlamp.

Terminal ② of each headlamp supplies ground through body ground E43 or E57.
With power and ground supplied, the low beam headlamps will illuminate.

High beam operation/flash-to-pass operation

When the lighting switch is turned to the 2ND position and placed in HIGH ("A") position or PASS ("C") position, power is supplied
- from lighting switch terminal ⑨
- to terminals ① (Outer) and ④ (Inner) of each RH headlamp, and
- from lighting switch terminal ⑥
- to terminals ① (Outer) and ④ (Inner) of each LH headlamp, and
- to combination meter terminal ㊲ for the high beam indicator.

Ground is supplied to terminal ㊱ of the combination meter through body ground M1.
Terminals ② (Outer) and ⑤ (Inner) of each headlamp supply ground through body ground E43 or E57.
With power and ground supplied, the high beams and the high beam indicator will illuminate.

Schematic

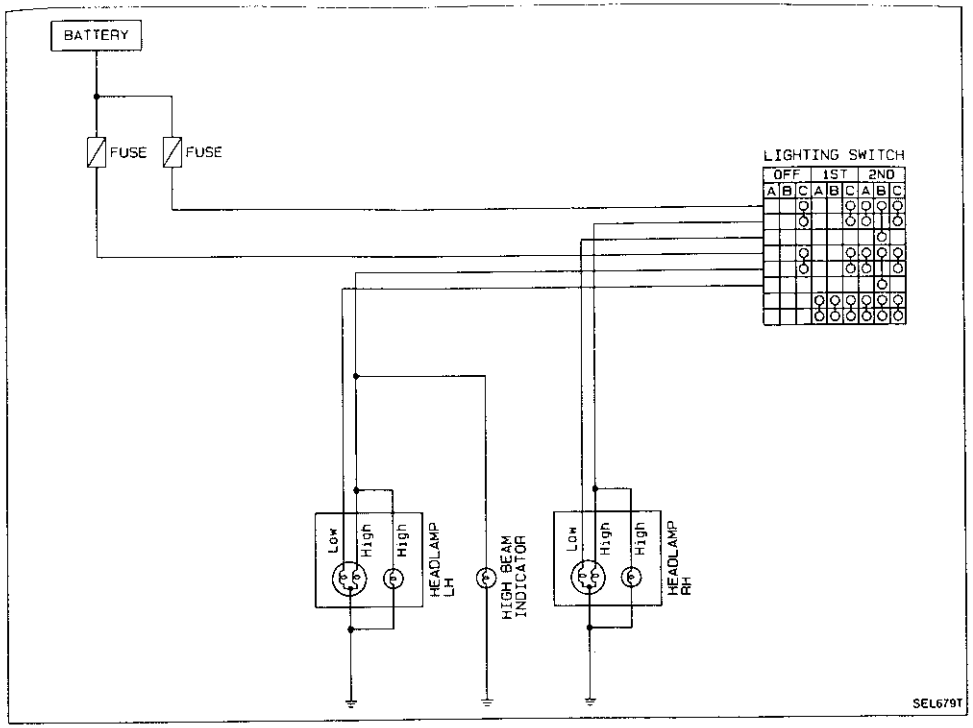

Wiring Diagram — H/LAMP —

EL-H/LAMP-01

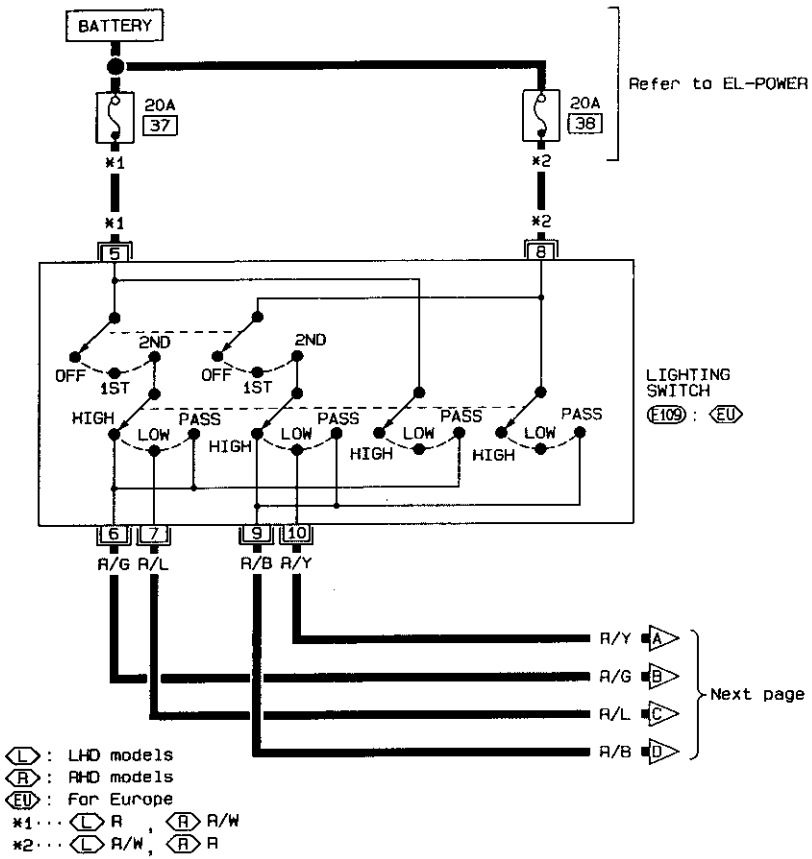

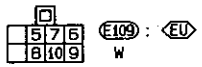

SEL680T

Wiring Diagram — H/LAMP — (Cont'd)

EL-H/LAMP-02

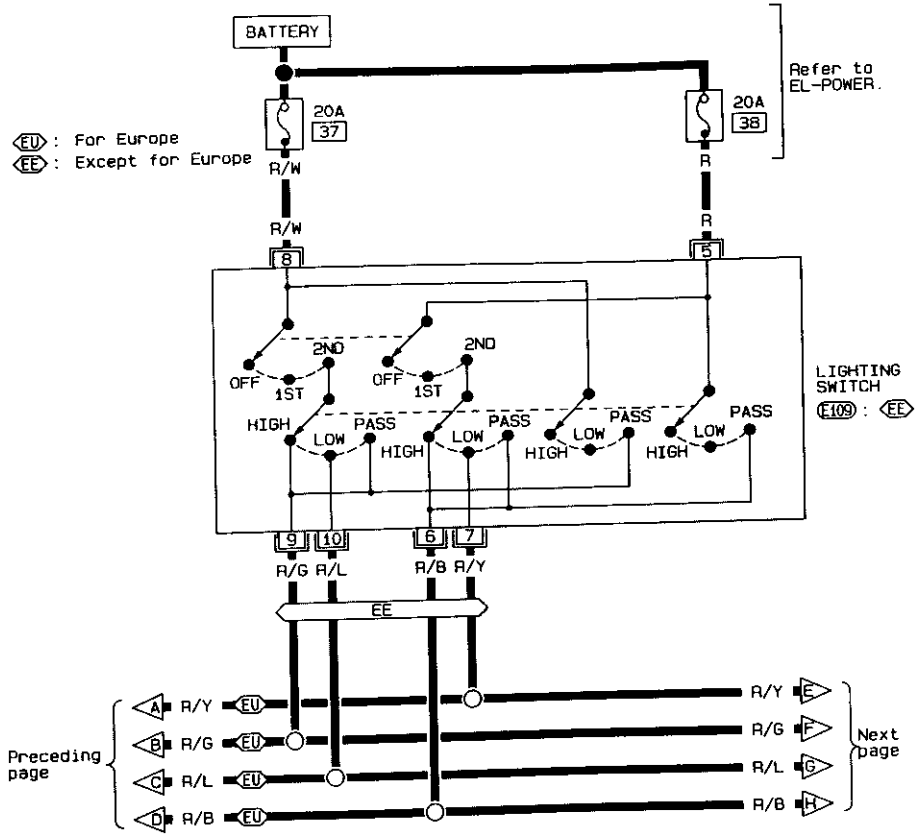

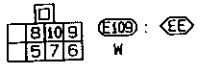

SEL681T

Wiring Diagram — H/LAMP — (Cont'd)

EL-H/LAMP-03

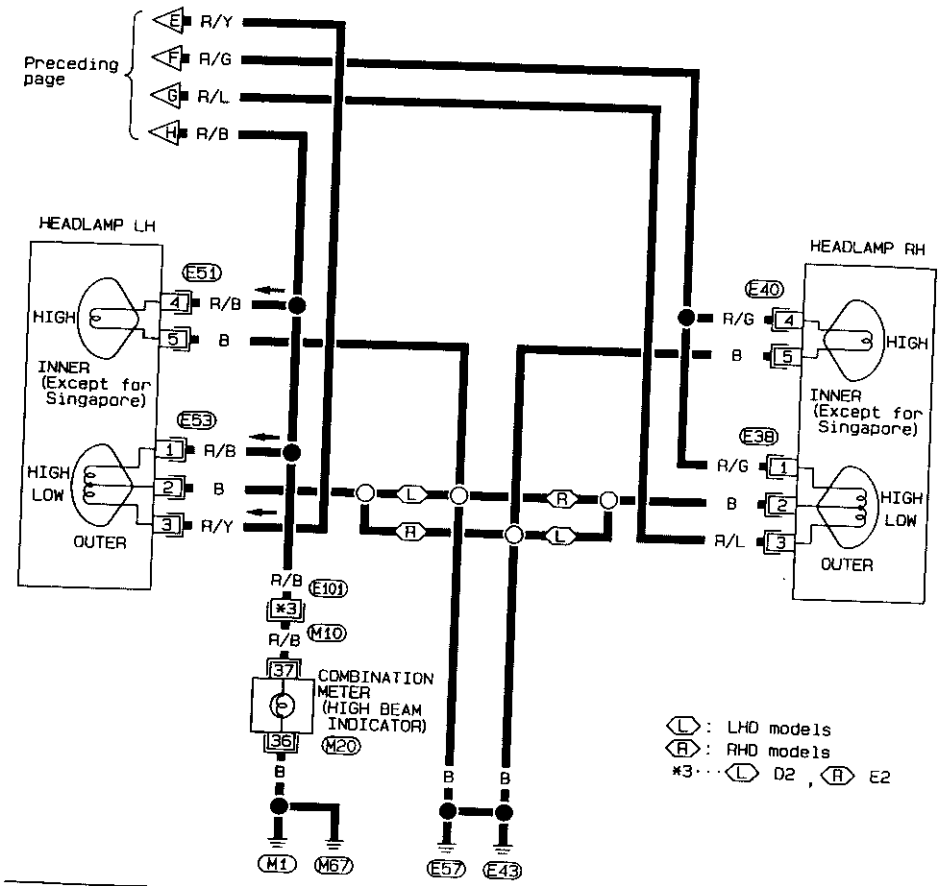

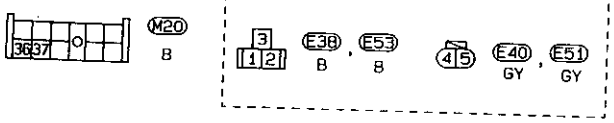

Refer to last page (Foldout page).

M10 , E101

SEL682T

Trouble Diagnoses

Symptom	Possible cause	Repair order
LH headlamps do not operate.	1. Bulb 2. Ground (E43) or (E57) 3. 20A fuse 4. Lighting switch	1. Check bulb. 2. Check ground (E43) or (E57). 3. Check 20A fuse (No. 38, located in fusible link and fuse box). Verify battery positive voltage is present at terminal *1 of lighting switch. 4. Check lighting switch.
RH headlamps do not operate.	1. Bulb 2. Ground (E43) or (E57) 3. 20A fuse 4. Lighting switch	1. Check bulb. 2. Check ground (E43) or (E57). 3. Check 20A fuse (No. 37, located in fusible link and fuse box). Verify battery positive voltage is present at terminal *2 of lighting switch. 4. Check lighting switch.
LH high beams do not operate, but LH low beam operates.	1. Bulbs 2. Open in LH high beams circuit 3. Lighting switch	1 Check bulbs. 2. Check R/B wire between lighting switch and LH headlamps for an open circuit. 3. Check lighting switch.
LH low beam does not operate, but LH high beam operates.	1. Bulb 2. Open in LH low beam circuit 3. Lighting switch	1. Check bulb. 2. Check R/Y wire between lighting switch and LH headlamp for an open circuit. 3. Check lighting switch.
RH high beams do not operate, but RH low beam operates.	1. Bulbs 2. Open in RH high beams circuit 3. Lighting switch.	1 Check bulbs. 2. Check R/G wire between lighting switch and RH headlamps for an open circuit. 3. Check lighting switch.
RH low beam does not operate, but RH high beam operates.	1. Bulb 2. Open in RH low beam circuit 3. Lighting switch	1. Check bulb. 2 Check R/L wire between lighting switch and RH headlamp for an open circuit. 3. Check lighting switch.
High beam indicator does not work.	1. Bulb 2. Ground (M1) 3. Open in high beam circuit	1. Check bulb in combination meter. 2. Check ground (M1). 3 Check R/B wire between lighting switch and combination meter for an open circuit.

*1: (8) ... Models for Europe
(5) ... Models except for Europe

*2: (5) ... Models for Europe
(8) ... Models except for Europe

System Description

The headlamp system on vehicles for Norway and Sweden contains a daytime light unit. The unit activates the following whenever the engine is running with the lighting switch in the OFF position:

- Low beam headlamps
- Clearance, license, tail and illumination lamps

Power is supplied at all times

- through 20A fuse (No. 37 , located in the fusible link and fuse box)
- to daytime light unit terminal ③ and
- to lighting switch terminal ⑤.

Power is also supplied at all times

- through 20A fuse (No. 38 , located in the fusible link and fuse box)
- to daytime light unit terminal ② and
- to lighting switch terminal ⑧.

Power is also supplied at all times

- through 10A fuse (No. 23 , located in the fuse block)
- to daytime light unit terminal ① and
- to lighting switch terminal ⑪.

With the ignition switch in the ON or START position, power is supplied

- through 7.5A fuse (No. 26 , located in the fuse block)
- to daytime light unit terminal ⑦.

With the ignition switch in the START position, power is supplied

- through 7.5A fuse (No. 2 , located in the fuse block)
- to daytime light unit terminal ⑥.

Ground is supplied to daytime light unit terminal ⑨ through body ground (E43).

HEADLAMP OPERATION

Low beam operation

When the lighting switch is turned to the 2ND position and placed in LOW ("B") position, power is supplied

- from lighting switch terminal ⑦ or
- from daytime light unit terminal ④
- to RH headlamp terminal ③.

Ground is supplied to RH headlamp terminal ② through body ground (E43).

Also, when the lighting switch is turned to the 2ND position and placed in LOW ("B") position, power is supplied

- from lighting switch terminal ⑩ or
- from daytime light unit terminal ⑤
- to LH headlamp terminal ③.

Ground is supplied to LH headlamp terminal ② through body ground (E57).

With power and ground supplied, the low beam headlamps illuminate.

High beam operation/flash-to-pass operation

When the lighting switch is turned to the 2ND position and placed in HIGH ("A") position or PASS ("C") position, power is supplied

- from lighting switch terminal ⑥
- to terminals ① (Outer) and ④ (Inner) of RH headlamp, and
- from lighting switch terminal ⑨
- to terminals ① (Outer) and ④ (Inner) of LH headlamp, and
- to combination meter terminal ⑰ for the high beam indicator.

Ground is supplied to terminal ⑯ of the combination meter through body ground (M1).

Terminals ② (Outer) and ⑤ (Inner) of headlamp supply ground through body ground (E43) or (E57).

With power and ground supplied, the high beams and the high beam indicator will illuminate.

System Description (Cont'd)

DAYTIME LIGHT OPERATION

With the engine running and the lighting switch in the OFF position, power is supplied

- to daytime light unit terminal ②
- through daytime light unit terminal ⑤
- to terminal ③ of LH headlamp
- to daytime light unit terminal ③
- through daytime light unit terminal ④
- to terminal ③ of RH headlamp.

Ground is supplied to terminal ② of each headlamp through body ground (E43) or (E57).

Ground is also supplied to terminal ⑨ of daytime light unit through body ground (E43).

Operation (Daytime light system)

The headlamps' low beam and clearance, license, tail and illumination lamps automatically turn on after starting the engine with lighting switch in "OFF" position.

Lighting switch operations other than the above are the same as conventional light systems.

Engine		With engine stopped									With engine running								
Lighting switch		OFF			1ST			2ND			OFF			1ST			2ND		
		A	B	C	A	B	C	A	B	C	A	B	C	A	B	C	A	B	C
Headlamp	High beam	X	X	O	X	X	O	O	X	O	X	X	O	X	X	O	O	X	O
	Low beam	X	X	X	X	X	X	X	O	X	O	O	O	X	X	X	X	O	X
Clearance and tail lamp		X	X	X	O	O	O	O	O	O	O	O	O	O	O	O	O	O	O
License and instrument illumination lamp		X	X	X	O	O	O	O	O	O	O	O	O	O	O	O	O	O	O

O: Lamp "ON"
X: Lamp "OFF"
□: Added functions

Schematic

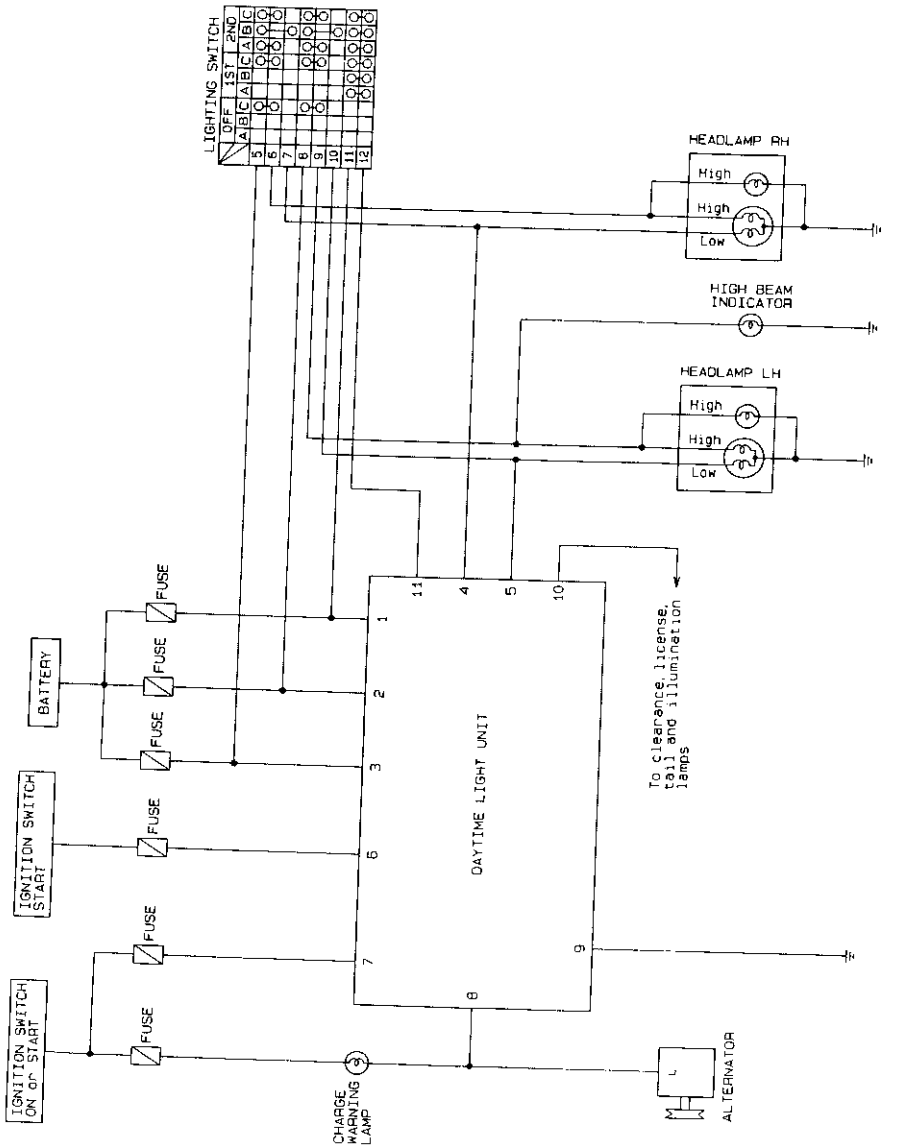

SEL683T

Wiring Diagram — DTRL —

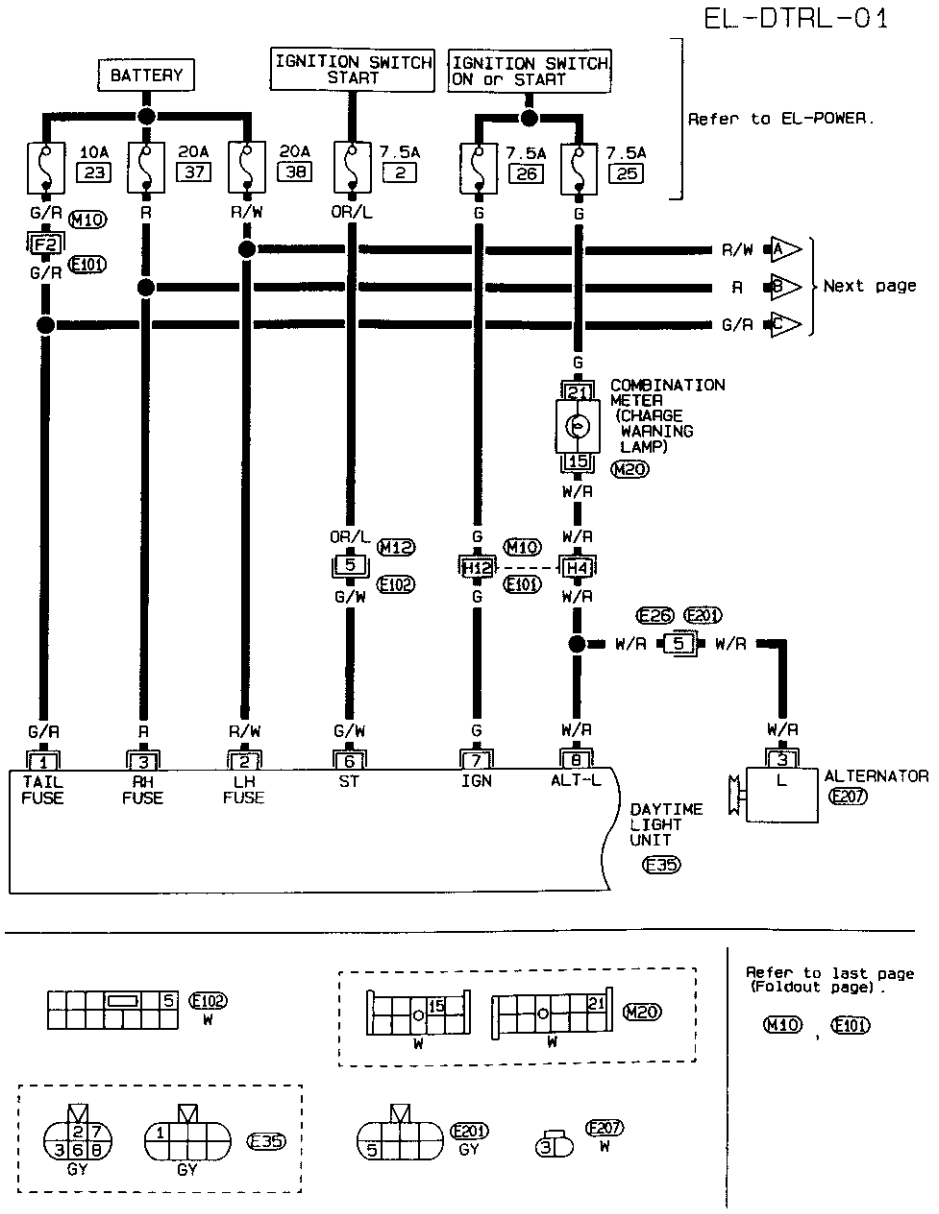

SEL684T

EL-DTRL-02

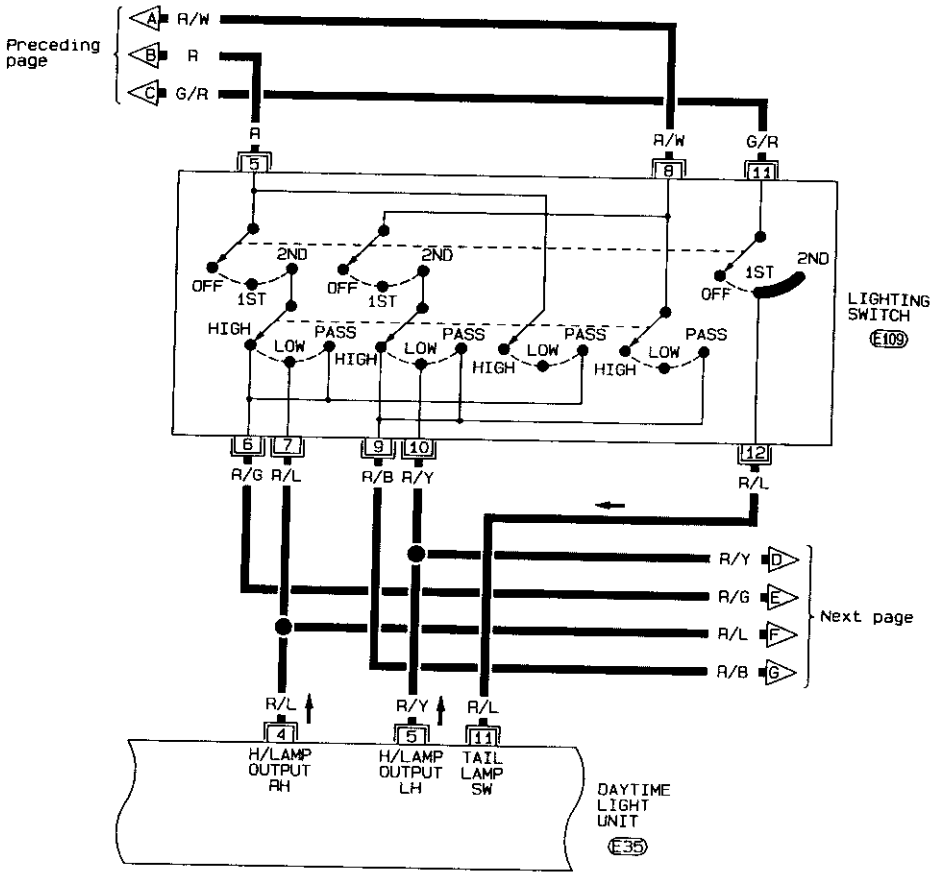

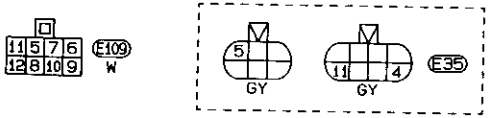

SEL685T

EL-DTRL-03

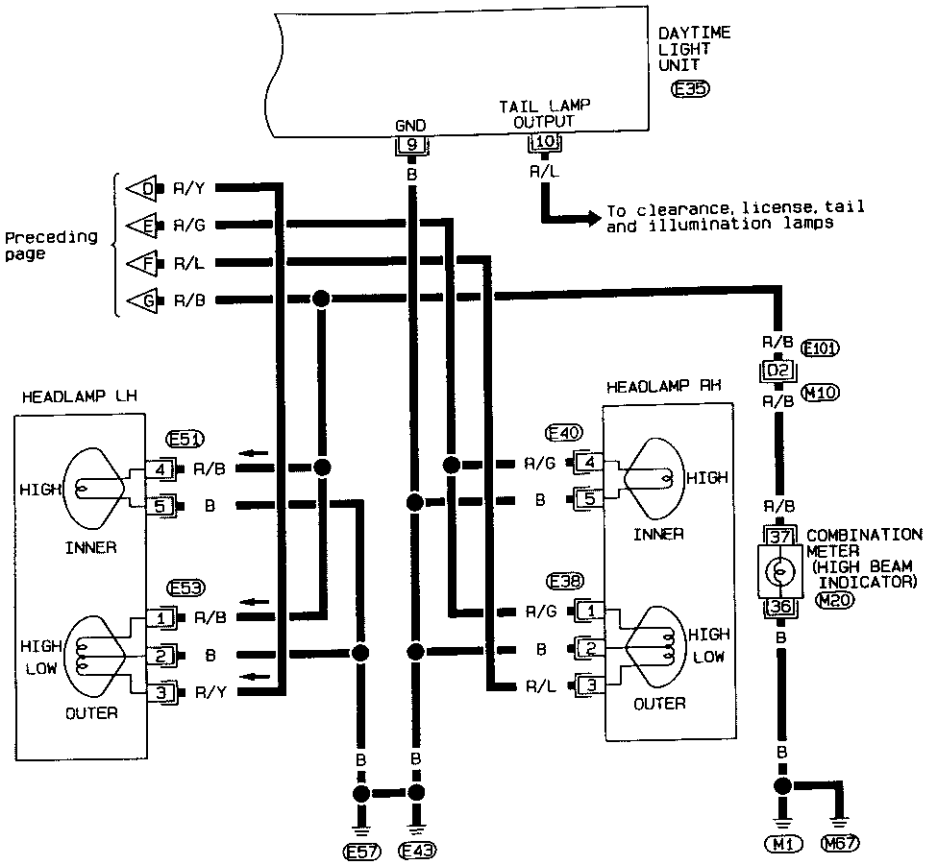

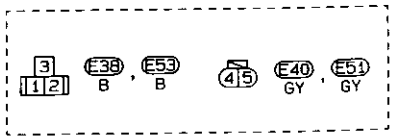

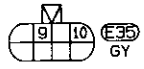

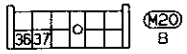

Refer to last page (Foldout page).

M10 , E101

SEL686T

Trouble Diagnoses

DAYTIME LIGHT UNIT INSPECTION TABLE

(Data are reference values.)

Terminal No.	Item	Condition		Judgement standard
1	Power source (BAT)		When turning ignition switch to "ON"	Battery positive voltage
			When turning ignition switch to "OFF"	Battery positive voltage
2	Power source (BAT)	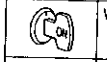	When turning ignition switch to "ON"	Battery positive voltage
			When turning ignition switch to "OFF"	Battery positive voltage
3	Power source (BAT)		When turning ignition switch to "ON"	Battery positive voltage
			When turning ignition switch to "OFF"	Battery positive voltage
4	RH lo beam (Lighting switch)		When turning lighting switch to "HEAD" and 2ND positions	Battery positive voltage
			When turning lighting switch to "OFF" with engine running (daytime light operation)	Battery positive voltage
5	LH lo beam (Lighting switch)		When turning lighting switch to "HEAD" and 2ND positions	Battery positive voltage
			When turning lighting switch to "OFF" with engine running (daytime light operation)	Battery positive voltage
6	Start signal		When turning ignition switch to "ST"	Battery positive voltage
			When turning ignition switch to "ON" from "ST"	1V or less
			When turning ignition switch to "OFF"	1V or less
7	Power source (IGN)		When turning ignition switch to "ON"	Battery positive voltage
			When turning ignition switch to "ST"	Battery positive voltage
			When turning ignition switch to "OFF"	1V or less
8	Alternator		When turning ignition switch to "ON"	More than 5V
			When engine is running	Battery positive voltage
			When turning ignition switch to "OFF"	1V or less

Trouble Diagnoses (Cont'd)

Terminal No.	Item	Condition		Judgement standard
9	Ground		—	—
10	Small lamps		When turning lighting switch to 1ST or 2ND position	Battery positive voltage
			When turning lighting switch to "OFF" with engine running (daytime light operation)	Battery positive voltage
11	Lighting switch		When turning lighting switch to 1ST or 2ND position	Battery positive voltage
			When turning lighting switch to "OFF"	1V or less

Description

- The vertical direction of the headlamp beam can be adjusted from inside the vehicle. This prevents the headlamp beam axis from facing upward due to changes in number of occupants and vehicle load conditions.

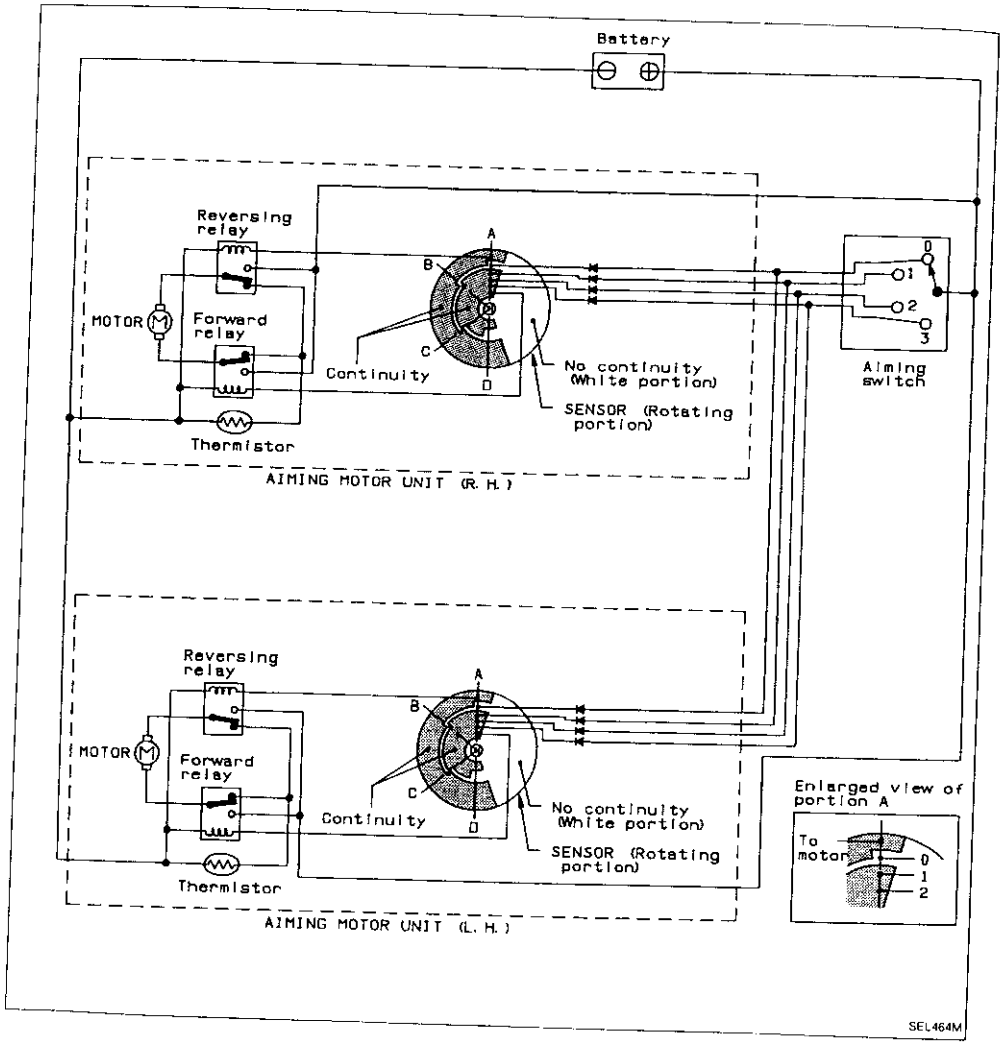

Description (Cont'd)

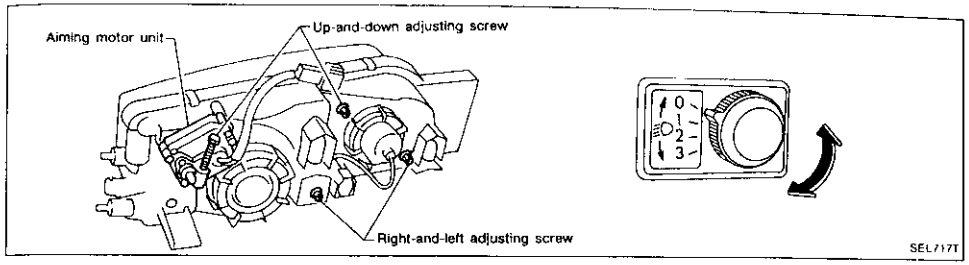

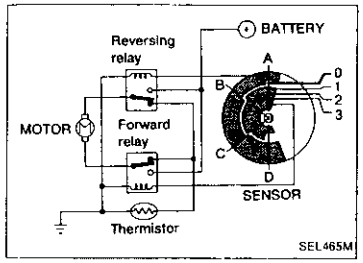

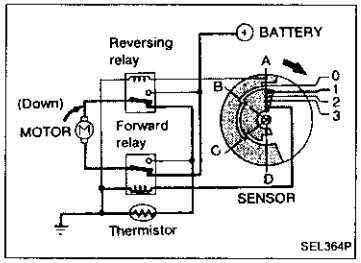

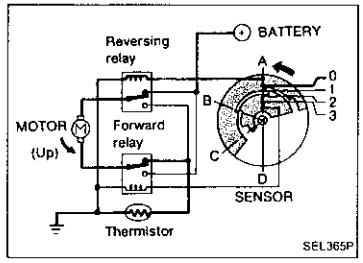

CIRCUIT OPERATION

[Example]

Aiming switch "0"

- When the aiming switch is set to "0", the motor will not start. This is because the power terminals are positioned at the nonconductive section of the sensor's rotary unit.

Aiming switch "0" → "1"

- When the aiming switch is moved from "0" to "1", the sensor's conductive section activates the relay. Power is supplied through the relay to the motor. The headlamps will then move in the "DOWN" direction.
- The motor continues to rotate while the rotary unit of the sensor moves from point A to point B.
- The power terminals will then be positioned at the nonconductive section, disconnecting the power to the motor. The motor will then stop.

Aiming switch "1" → "0"

- When the aiming switch is moved from "1" to "0", the sensor's conductive section activates the relay. Power is supplied through the relay to the motor. The motor will rotate to move the headlamps in the "UP" direction.
- When the rotary unit of the sensor moves from point B to point A, the motor will stop.

Wiring Diagram — AIM —

LHD MODELS

EL-AIM-01

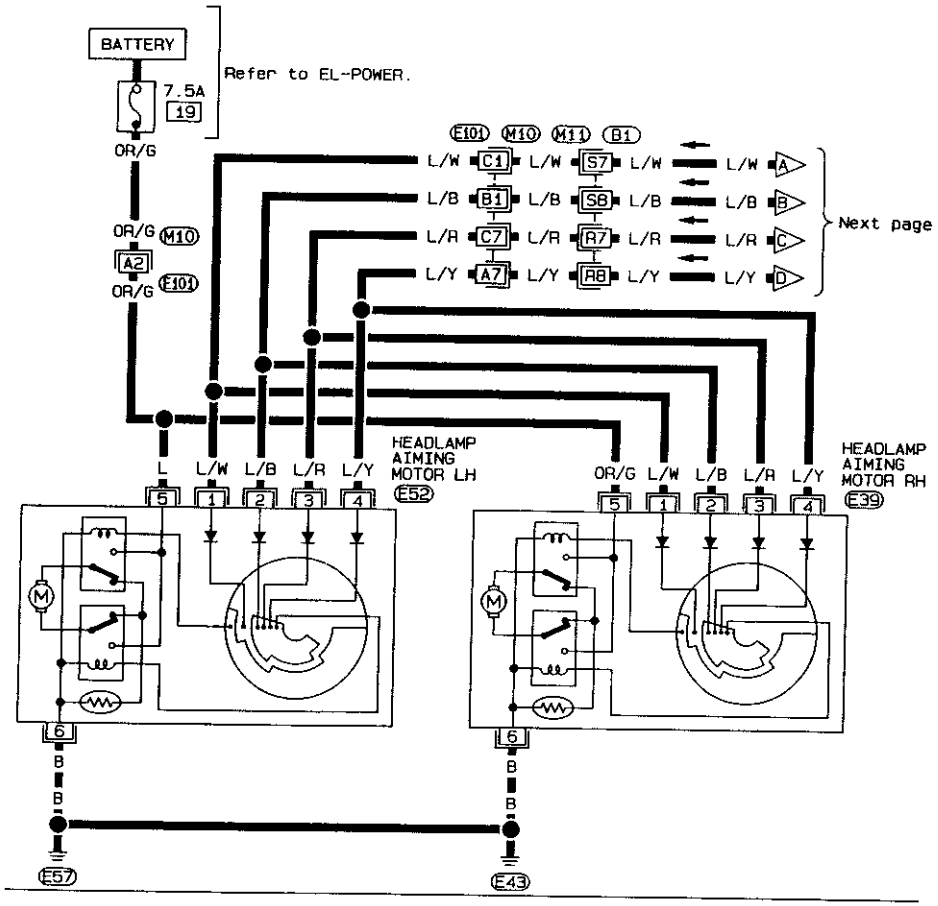

Refer to last page (Foldout page).

M10 , E101

M11 , B1

SEL687T

Wiring Diagram — AIM — (Cont'd)

EL-AIM-02

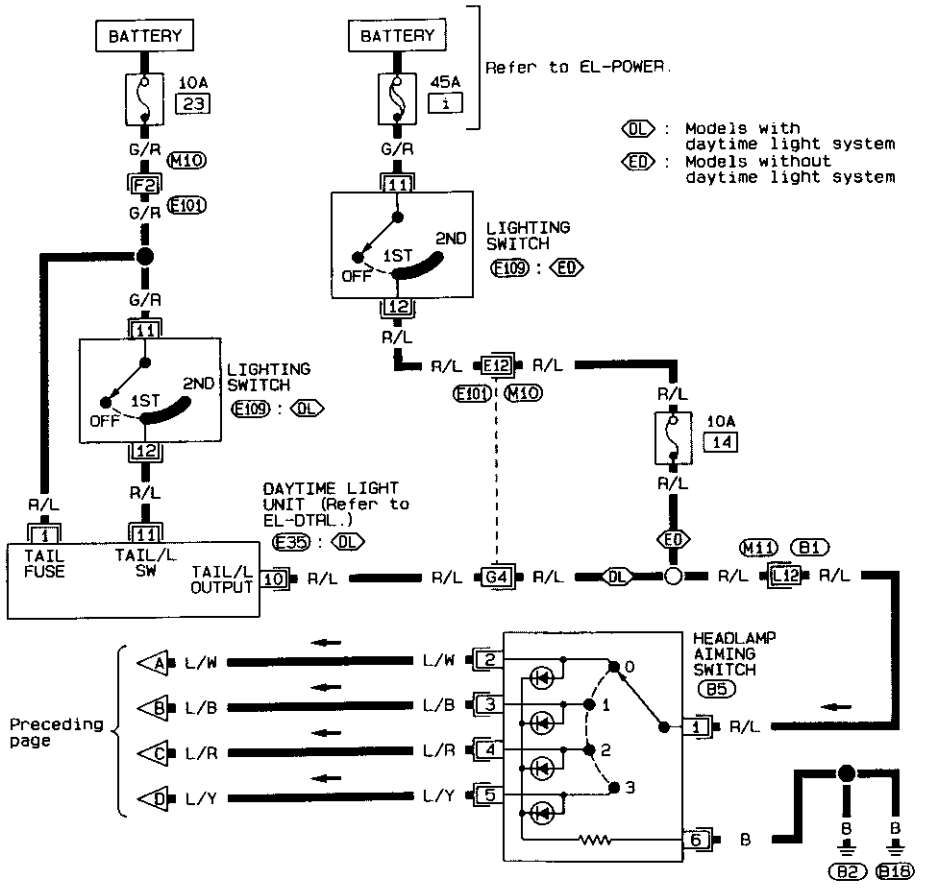

Refer to last page (Foldout page).

M10 , E101

M11 , B1

SEL688T

Wiring Diagram — AIM — (Cont'd)

RHD MODELS

EL-AIM-03

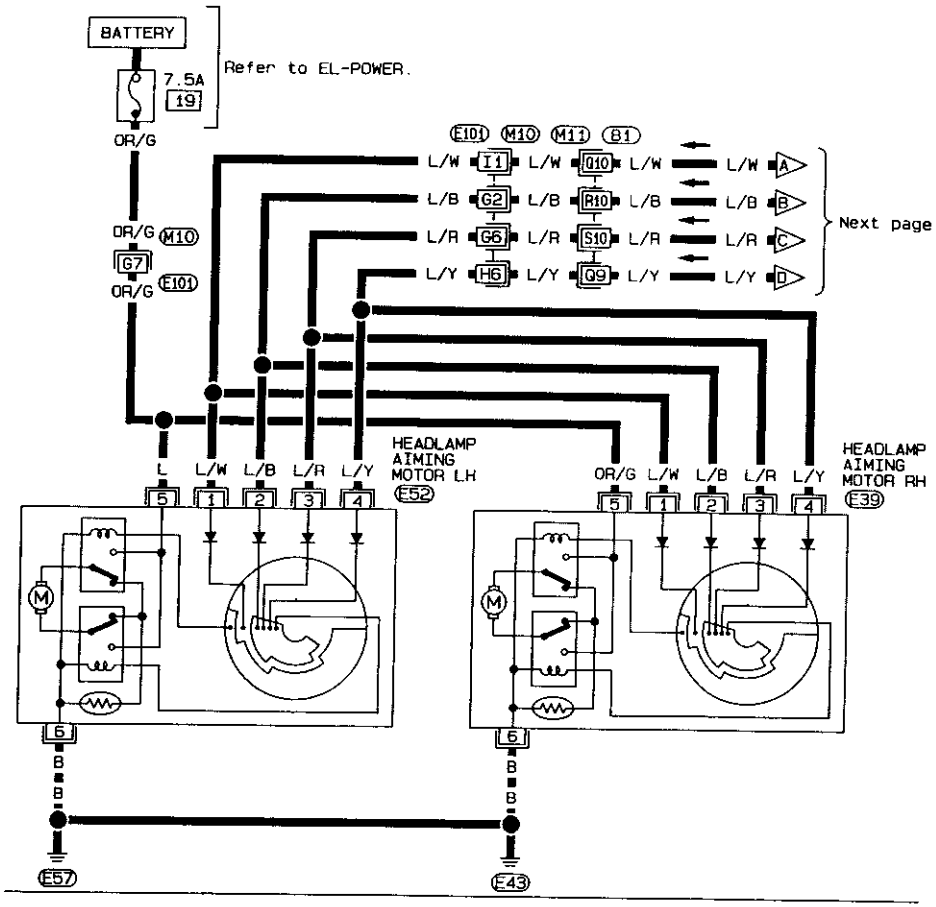

1 2 3 4 5 6 E39 GY , E52 GY

Refer to last page (Foldout page).

M10 , E101

M11 , B1

SEL689T

Wiring Diagram — AIM — (Cont'd)

EL-AIM-04

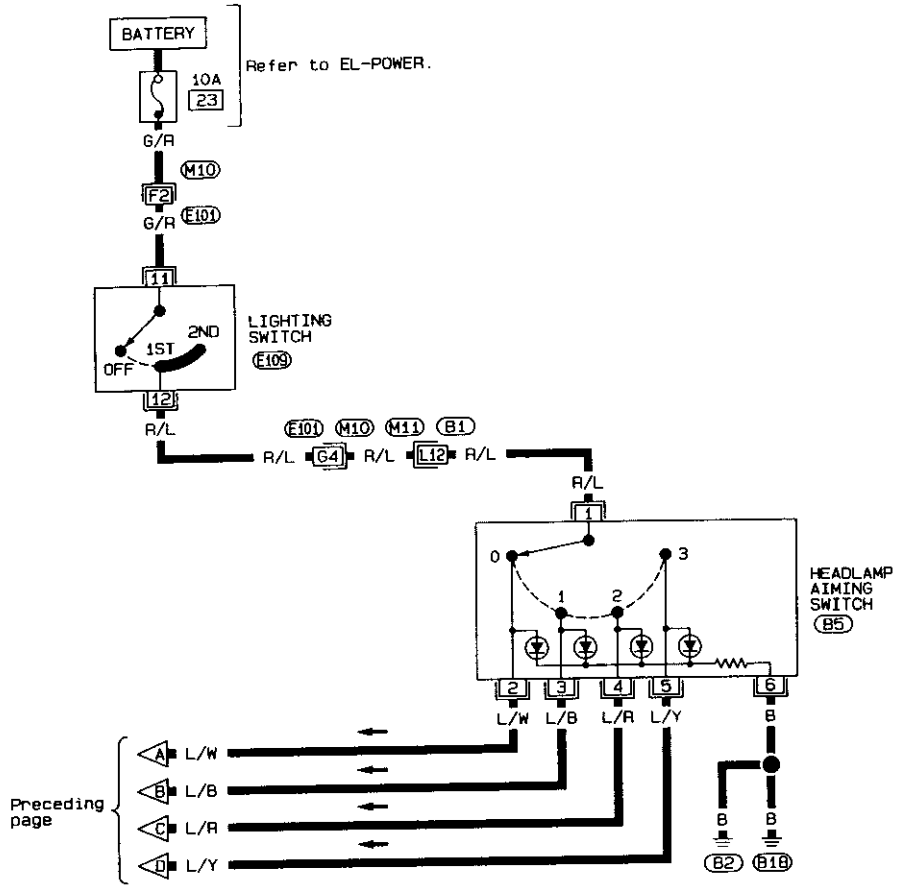

1 4 5 3 2 6 B5 W

11 12 E109 W

Refer to last page (Foldout page).

M10 , E101

M11 , B1

SEL690T

Aiming Adjustment

When performing headlamp aiming adjustment, use an aiming machine, aiming wall screen or headlamp tester. Aimers should be in good repair, calibrated and operated according to their operation manuals.

If any aimer is not available, aiming adjustment can be done as follows:

For details, refer to the regulations in your own country.

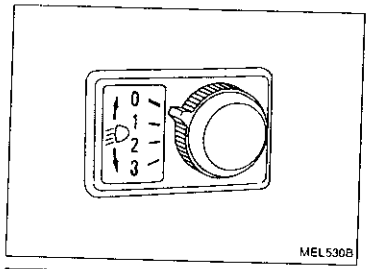

CAUTION:

- **Keep all tires inflated to correct pressures.**
- **Place vehicle and tester on one and same flat surface.**
- **See that there is no-load in vehicle (coolant, engine oil filled up to correct level and full fuel tank) other than the driver (or equivalent weight placed in driver's position).**

CAUTION:

Be sure aiming switch is set to "0" when performing aiming adjustment on vehicles equipped with headlamp aiming control.

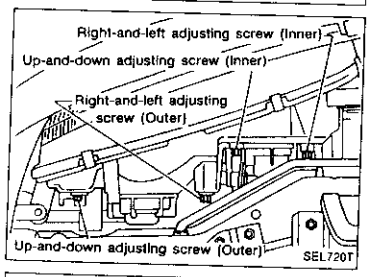

LOW BEAM

1. Turn headlamp low beam on.
2. Use adjusting screws to perform aiming adjustment.

- **First tighten the adjusting screw all the way and then make adjustment by loosening the screw.**

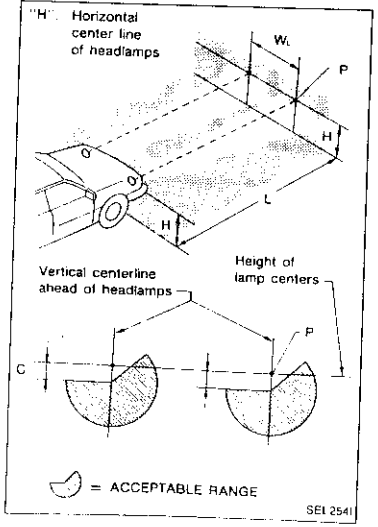

- **Adjust headlamps so that main axis of light is parallel to center line of body and is aligned with point P shown in illustration.**
- **Figure to the left shows headlamp aiming pattern for driving on right side of road; for driving on left side of road, aiming pattern is reversed.**
- **Dotted lines in illustration show center of headlamp.**

"H": Horizontal center line of headlamps
"W_L": Distance between each headlamp center
"L": 5,000 mm (196.85 in)
"C": 65 mm (2.56 in)

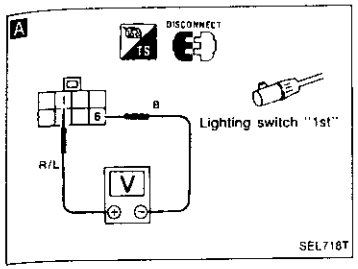

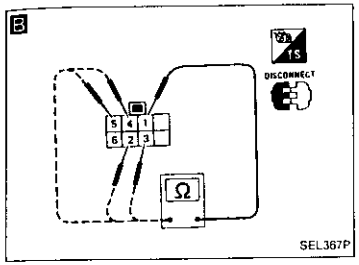

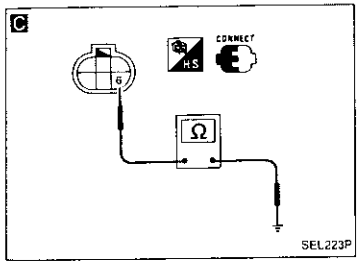

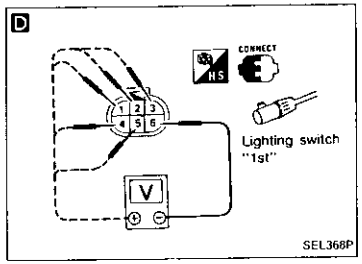

Trouble Diagnoses

SYMPTOM: Headlamp aiming does not operate.

A

POWER SUPPLY CIRCUIT CHECK (For aiming switch)
Check if 12 volts exist between terminals ① and ⑥

NG → Check 10A fuse at fuse block. (Refer to "POWER SUPPLY ROUTING".)

Voltmeter terminals (+)	Voltmeter terminals (−)	Voltage [V]
①	⑥	Approx. 12

OK ↓

B

AIMING SWITCH CHECK
Check continuity between terminals at each switch position

NG → Replace aiming switch.

Switch position \ Terminal	①	②	③	④	⑤
0	○	○			
1	○		○		
2	○			○	
3	○				○

OK ↓

C

GROUND CIRCUIT CHECK FOR AIMING MOTOR
Check continuity between terminals ⑥ and body ground.
Continuity exists ... OK

NG → Repair harness between aiming motor and body ground.

OK ↓

D

POWER SUPPLY CIRCUIT CHECK (For aiming motor unit)
Check if 12 volts exist between terminals ①, ②, ③, ④, ⑤ and ⑥.

NG → Check harness between aiming switch and aiming motor unit

Voltmeter terminals (+)	Voltmeter terminals (−)	Voltage [V]	Aiming switch position
①	⑥	Approx. 12	"0"
		0	Except "0"
②		Approx. 12	"1"
		0	Except "1"
③		Approx. 12	"2"
		0	Except "2"
④		Approx. 12	"3"
		0	Except "3"
⑤		Approx. 12	—

OK ↓

Replace aiming motor unit.

Clearance, License and Tail Lamps/System Description

LHD MODELS WITH DAYTIME LIGHT SYSTEM

The clearance, license and tail lamps on vehicles for Norway and Sweden contain a daytime light unit. The unit activates the small lamps whenever the engine and lighting switch are under the following conditions.

- Engine running
- Lighting switch in the OFF position

(For daytime light system, refer to "HEADLAMP — Daytime Light System —".)

Operation (when daytime light system is triggered.)

Power is supplied at all times
- through 10A fuse (No. 23 , located in the fuse block)
- to daytime light unit terminal ①.

With the engine running and the lighting switch in the OFF position, power is supplied
- through daytime light unit terminal ⑩
- to terminal ① of each lamp.

Ground is supplied to terminal ② of clearance lamps through body ground E43 or E57.
Ground is also supplied to terminal ② of license lamp and to terminal ④ of tail lamps through body ground T19.
With power and ground supplied, the clearance, license and tail lamps illuminate.

Operation (when daytime light system is not triggered.)

Power is supplied at all times
- through 10A fuse (No. 23 , located in the fuse block)
- to lighting switch terminal ⑪.

With the lighting switch in the 1ST or 2ND position, power is supplied
- through lighting switch terminal ⑫
- to daytime light unit terminal ⑪
- through daytime light unit terminal ⑩
- to terminal ① of each lamp.

Ground is supplied to terminal ② of clearance lamps through body ground E43 or E57.
Ground is also supplied to terminal ② of license lamp and to terminal ④ of tail lamps through body ground T19.
With power and ground supplied, the clearance, license and tail lamps illuminate.

LHD MODELS WITHOUT DAYTIME LIGHT SYSTEM

Power is supplied at all times
- through 45A fusible link (letter i, located in the fusible link and fuse box)
- to lighting switch terminal ⑪.

Operation

With the lighting switch in the 1ST or 2ND position, power is supplied
- from lighting switch terminal ⑫
- through 10A fuse (No. 14 , located in the fuse block)
- to terminal ① of clearance, license and RH tail lamps.

With the lighting switch in the 1ST or 2ND position, power is also supplied
- from lighting switch terminal ⑫
- through 7.5A fuse (No. 15 , located in the fuse block)
- to LH tail lamp terminal ①.

Ground is supplied to terminal ② of clearance lamps through body ground E43 or E57.
Ground is also supplied to terminal ② of license lamp and to terminal ④ of tail lamps through body ground T19.
With power and ground supplied, the clearance, license and tail lamps illuminate.

Clearance, License and Tail Lamps/System Description (Cont'd)

RHD MODELS FOR EUROPE

Power is supplied at all times
- through 10A fuse (No. 23 , located in the fuse block)
- to lighting switch terminal ⑪.

Operation

With the lighting switch in the 1ST or 2ND position, power is supplied
- through the lighting switch terminal ⑫
- to terminal ① of each lamp.

Ground is supplied to terminal ② of clearance lamps through body ground E43 or E57.
Ground is also supplied to terminal ② of license lamp and to terminal ④ of tail lamps through body ground T19.
With power and ground supplied, the clearance, license and tail lamps illuminate.

RHD MODELS EXCEPT FOR EUROPE

Power is supplied at all times
- through 10A fuse (No. 23 , located in the fuse block)
- to lighting switch terminal ⑫, and
- to front fog lamp relay terminal ⑥.

Operation (when front fog lamp system is not triggered.)

With the lighting switch in the 1ST or 2ND position, power is supplied
- through lighting switch terminal ⑪
- to terminal ① of each lamp.

Ground is supplied to terminal ② of clearance lamps through body ground E43 or E57.
Ground is also supplied to terminal ② of license lamp and to terminal ④ of tail lamps through body ground T19.

Operation (when front fog lamp system is triggered.)

With the front fog lamp switch in the ON position:
- ground is supplied to front fog lamp relay terminal ② through the front fog lamp switch and body ground E43.

The front fog lamp relay is energized and power is supplied
- through front fog lamp relay terminal ⑦
- to terminal ① of each lamp.

Ground is supplied to terminal ② of clearance lamps through body ground E43 or E57.
Ground is also supplied to terminal ② of license lamp and to terminal ④ of tail lamps through body ground T19.
With power and ground supplied, the clearance, license and tail lamps illuminate.

Clearance, License and Tail Lamps/ Wiring Diagram — TAIL/L —

LHD MODELS WITH DAYTIME LIGHT SYSTEM

EL-TAIL/L-01

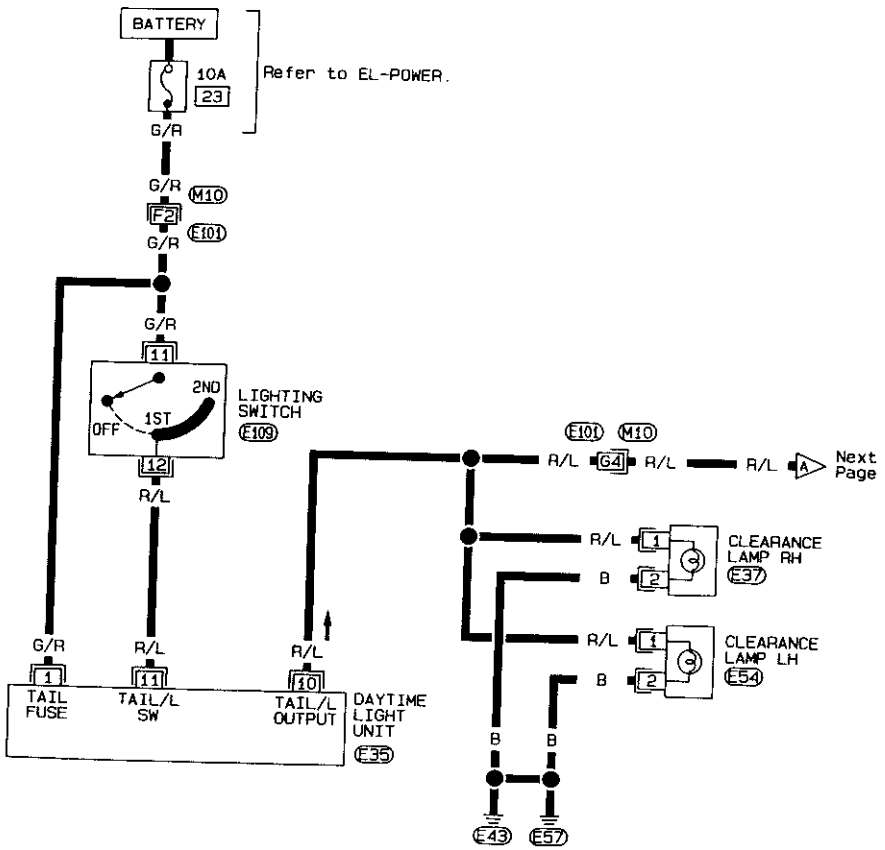

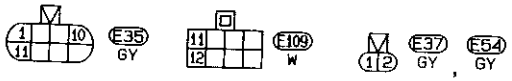

Refer to last page (Foldout page).

M10, E101

SEL691T

Clearance, License and Tail Lamps/ Wiring Diagram — TAIL/L — (Cont'd)

EL-TAIL/L-02

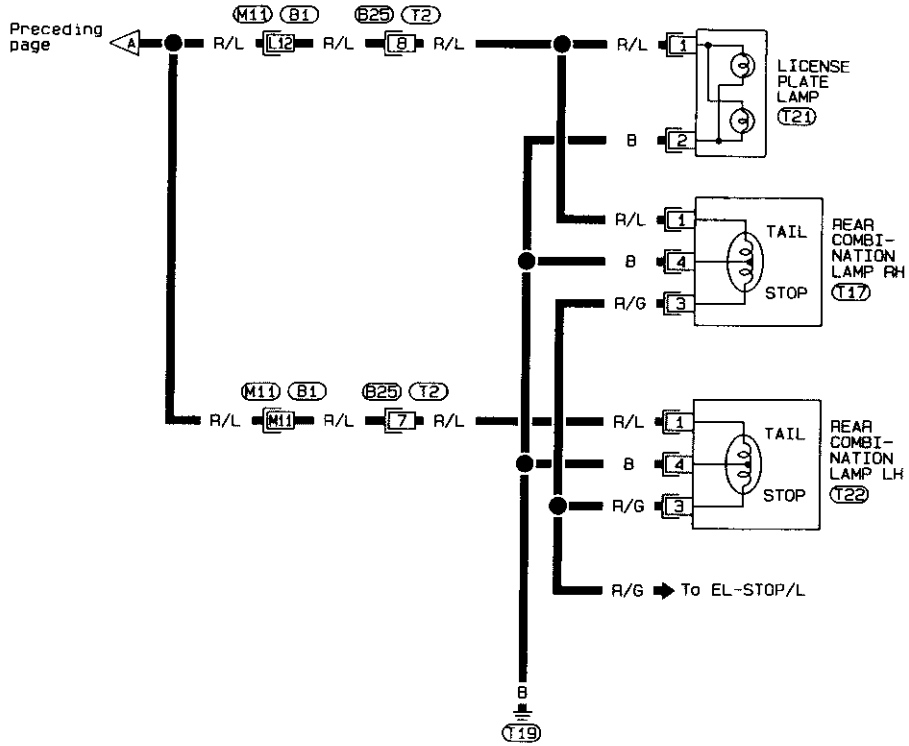

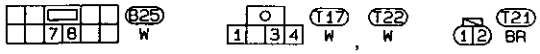

Refer to last page (Foldout page).

M11, B1

SEL692T

Clearance, License and Tail Lamps/ Wiring Diagram — TAIL/L — (Cont'd)

LHD MODELS WITHOUT DAYTIME LIGHT SYSTEM

EL-TAIL/L-03

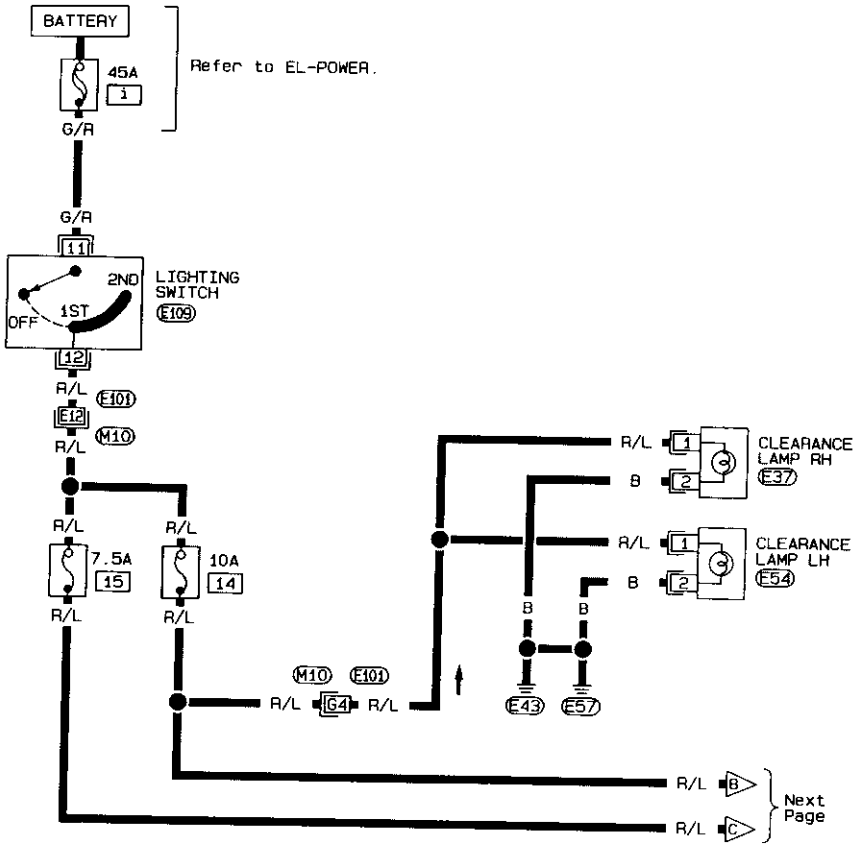

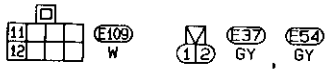

Refer to last page (Foldout page).

M10, E101

SEL693T

Clearance, License and Tail Lamps/ Wiring Diagram — TAIL/L — (Cont'd)

EL-TAIL/L-04

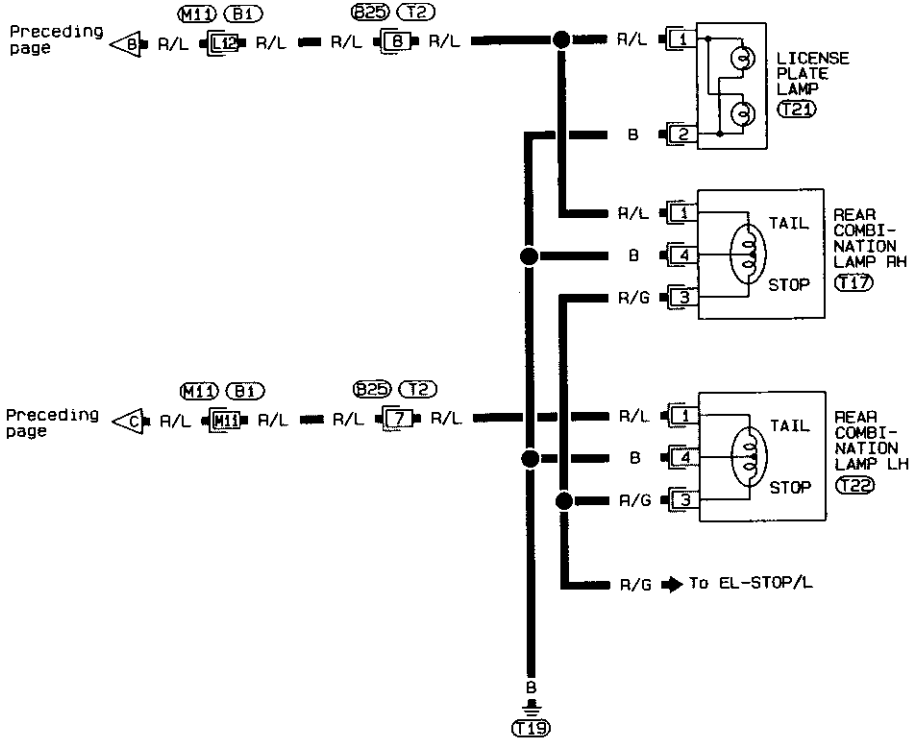

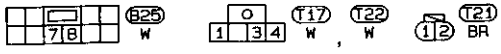

Refer to last page (Foldout page).

M11, B1

SEL694T

Clearance, License and Tail Lamps/ Wiring Diagram — TAIL/L — (Cont'd)

RHD MODELS

EL-TAIL/L-05

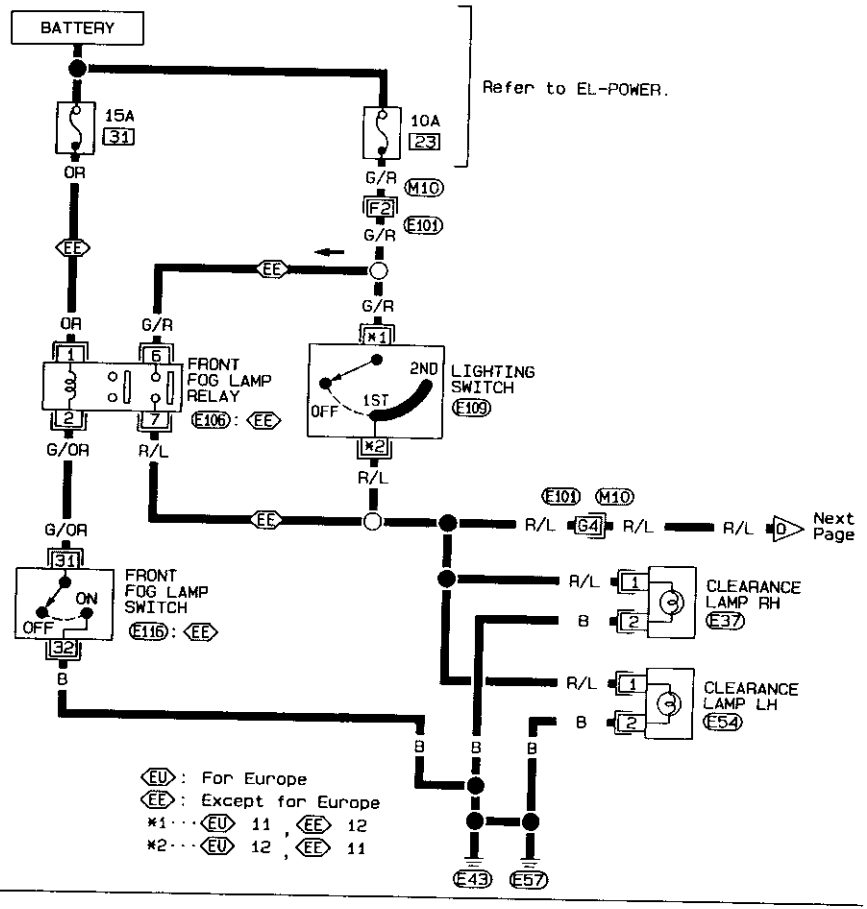

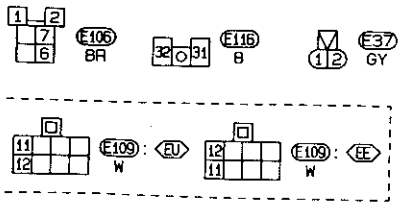

Refer to last page (Foldout page).

M10 , E101

SEL695T

Clearance, License and Tail Lamps/ Wiring Diagram — TAIL/L — (Cont'd)

EL-TAIL/L-06

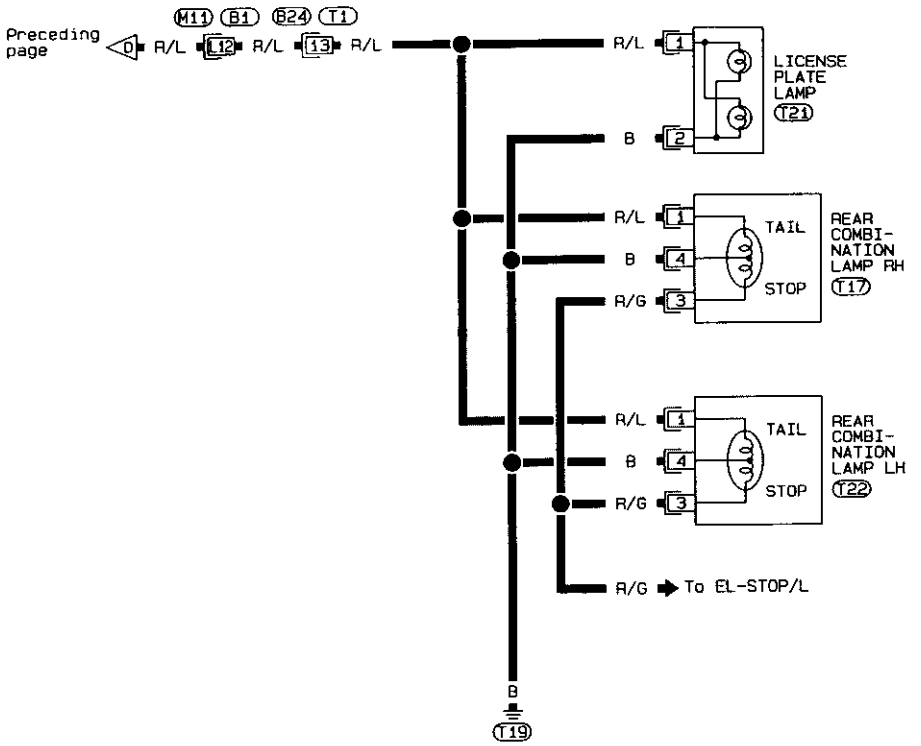

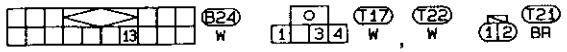

Refer to last page (Foldout page).

M11 , B1

SEL696T

Stop Lamp/Wiring Diagram — STOP/L —

EL-STOP/L-01

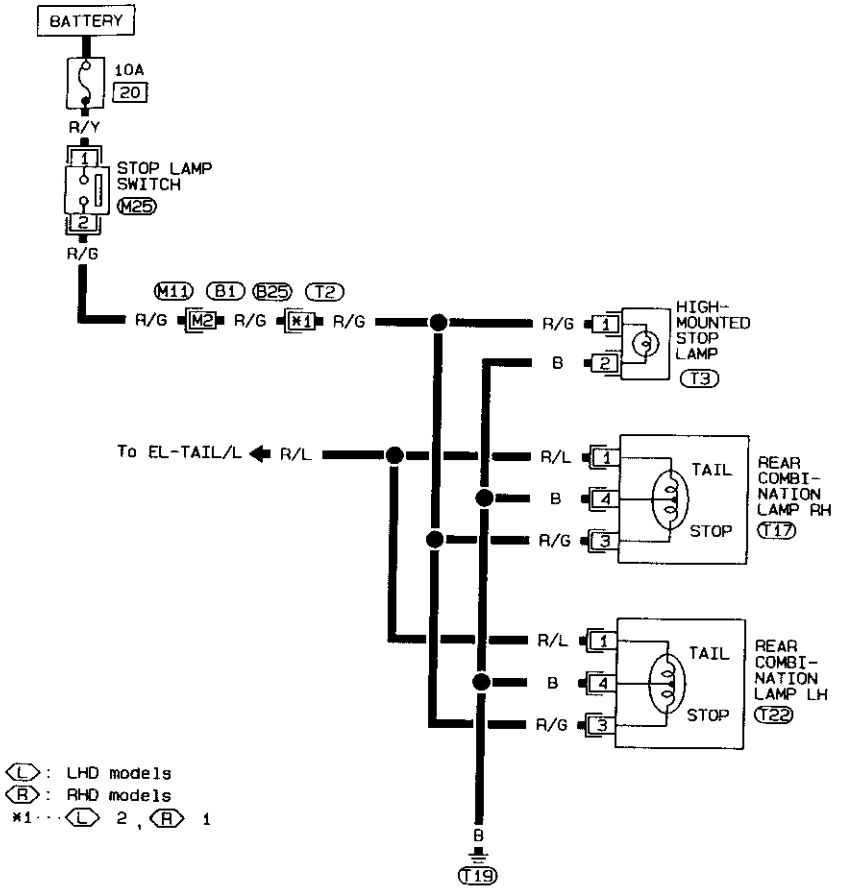

M25 B · B25 W · T3 W · T17 W , T22 W

Refer to last page (Foldout page).

M11 , B1

SEL836T

Back-up Lamp/Wiring Diagram — BACK/L —

EL-BACK/L-01

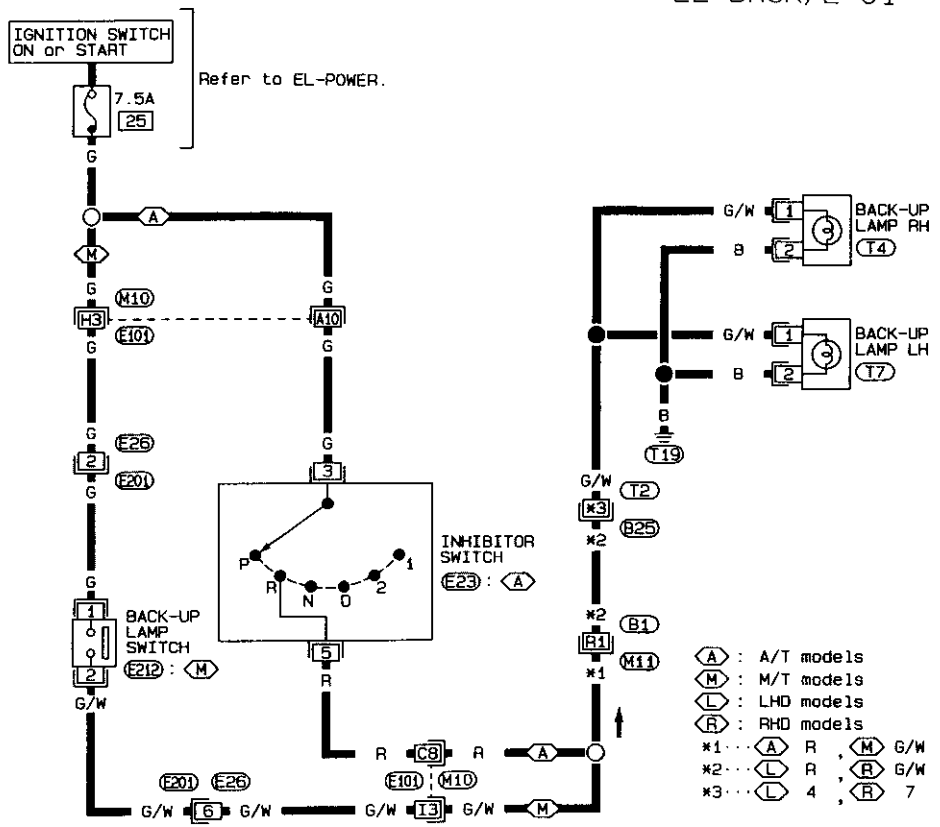

E201 GY · E212 W · E23 GY · B25 W · T4 , T7 W

Refer to last page (Foldout page).

M10 , E101
M11 , B1

SEL697T

Front Fog Lamps/System Description

LHD MODELS WITH DAYTIME LIGHT SYSTEM

Power is supplied at all times
- through 15A fuse (No. 31 , located in the fusible link and fuse box)
- to front fog lamp relay terminal ③.

Power is also supplied at all times
- through 10A fuse (No. 23 , located in the fuse block)
- to lighting switch terminal ⑪, and
- to daytime light unit terminal ①.

When the daytime light system is triggered, power is supplied
- through daytime light unit terminal ⑩
- to front fog lamp relay terminal ①, or

With the lighting switch in the 1ST or 2ND position, power is supplied
- through lighting switch terminal ⑫
- to daytime light unit terminal ⑪
- through daytime light unit terminal ⑩
- to front fog lamp relay terminal ①.

Front fog lamp operation

If the rear fog lamp system is triggered, terminal ② of rear fog lamp relay is grounded and power to the front fog lamp switch is interrupted.
When the rear fog lamp system is not operating, ground is supplied.
With the front fog lamp switch in the ON position:
- ground is supplied to front fog lamp relay terminal ②
- from rear fog lamp relay terminal ④
- to rear fog lamp relay terminal ③
- through front fog lamp switch and body ground (B2) or (B18).

The front fog lamp relay is energized and power is supplied
- from front fog lamp relay terminal ⑤
- to terminal ① of each front fog lamp.

Ground is supplied to terminal ② of each fog lamp through body ground (E43) or (E57).
With power and ground supplied, the front fog lamps illuminate.

LHD MODELS WITHOUT DAYTIME LIGHT SYSTEM

Power is supplied at all times
- through 15A fuse (No. 31 , located in the fusible link and fuse box)
- to front fog lamp relay terminal ③.

With the lighting switch in the 1ST or 2ND position, power is supplied
- through 45A fusible link (letter i, located in the fusible link and fuse box)
- to lighting switch terminal ⑪
- from lighting switch terminal ⑫
- through 10A fuse (No. 14 , located in the fuse block)
- to front fog lamp relay terminal ①.

Front fog lamp operation

The lighting switch must be in the 1ST or 2ND position for front fog lamp operation.
With the front fog lamp switch in the ON position:
- ground is supplied to front fog lamp relay terminal ② through the front fog lamp switch and body ground (B2) or (B18).

The front fog lamp relay is energized and power is supplied
- from front fog lamp relay terminal ⑤
- to terminal ① of each fog lamp.

Ground is supplied to terminal ② of each fog lamp through body ground (E43) or (E57).
With power and ground supplied, the front fog lamps illuminate.

Front Fog Lamps/System Description (Cont'd)

RHD MODELS FOR EUROPE

Power is supplied at all times
- through 15A fuse (No. 31 , located in the fusible link and fuse block)
- to front fog lamp relay terminal ③.

With the lighting switch in the 1ST or 2ND position, power is supplied
- through 10A fuse (No. 23 , located in the fuse block)
- to lighting switch terminal ⑪
- through terminal ⑫ of lighting switch
- to front fog lamp relay terminal ②.

Front fog lamp operation

The lighting switch must be in the 1ST or 2ND position for front fog lamp operation.
With the front fog lamp switch in the ON position:
- ground is supplied to front fog lamp relay terminal ① through the front fog lamp switch and body ground (B2) or (B18).

The front fog lamp relay is energized and power is supplied
- from front fog lamp relay terminal ⑤
- to terminal ① of each front fog lamp.

Ground is supplied to terminal ② of each front fog lamp through body ground (E43) or (E57).
With power and ground supplied, the front fog lamps illuminate.

RHD MODELS EXCEPT FOR EUROPE

Power is supplied at all times
- through 15A fuse (No. 31 , located in the fusible link and fuse box)
- to front fog lamp relay terminals ① and ③.

Front fog lamp operation

The front fog lamp switch is built into the combination switch.
With the front fog lamp switch in the ON position:
- ground is supplied to front fog lamp relay terminal ② through front fog lamp switch and body ground (E43).

The front fog lamp relay is energized and power is supplied
- from front fog lamp relay terminal ⑤
- to terminal ① of each front fog lamp.

Ground is supplied to terminal ② of each front fog lamp through body ground (E43) or (E57).
With power and ground supplied, the front fog lamps illuminate.

Front Fog Lamp/Wiring Diagram — F/FOG —

LHD MODELS WITH DAYTIME LIGHT SYSTEM

EL-F/FOG-01

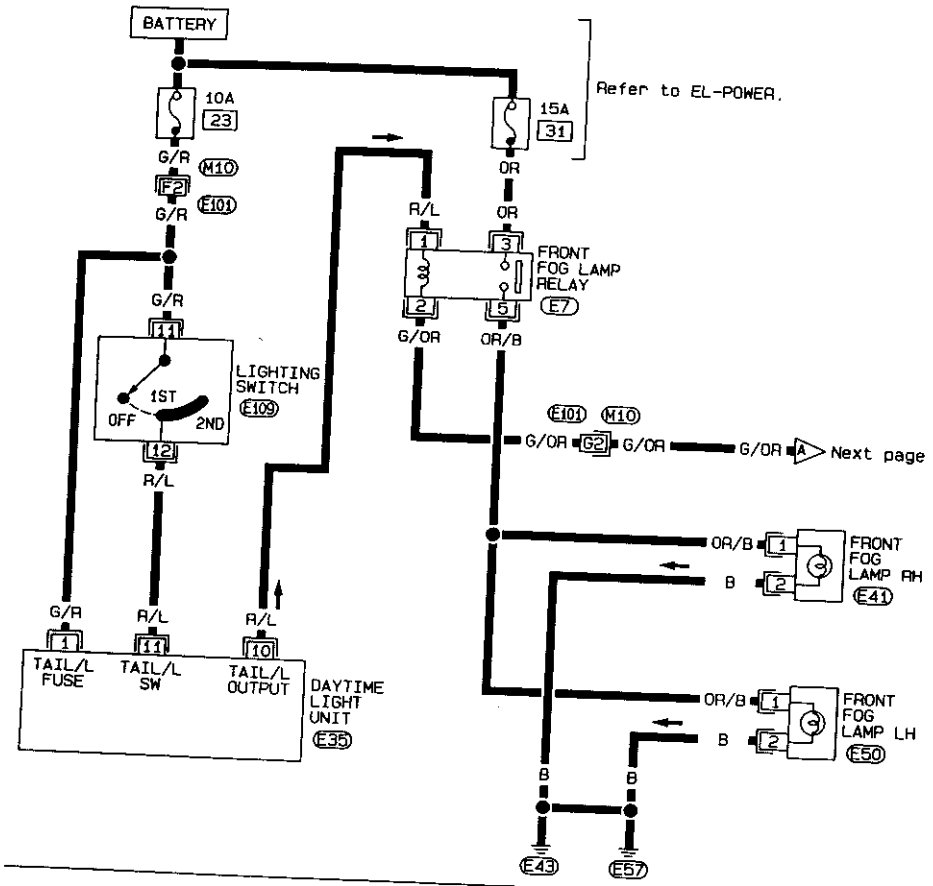

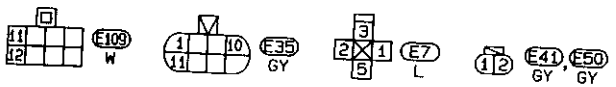

Refer to last page (Foldout page).

M10, E101

SEL698T

Front Fog Lamp/Wiring Diagram — F/FOG — (Cont'd)

EL-F/FOG-02

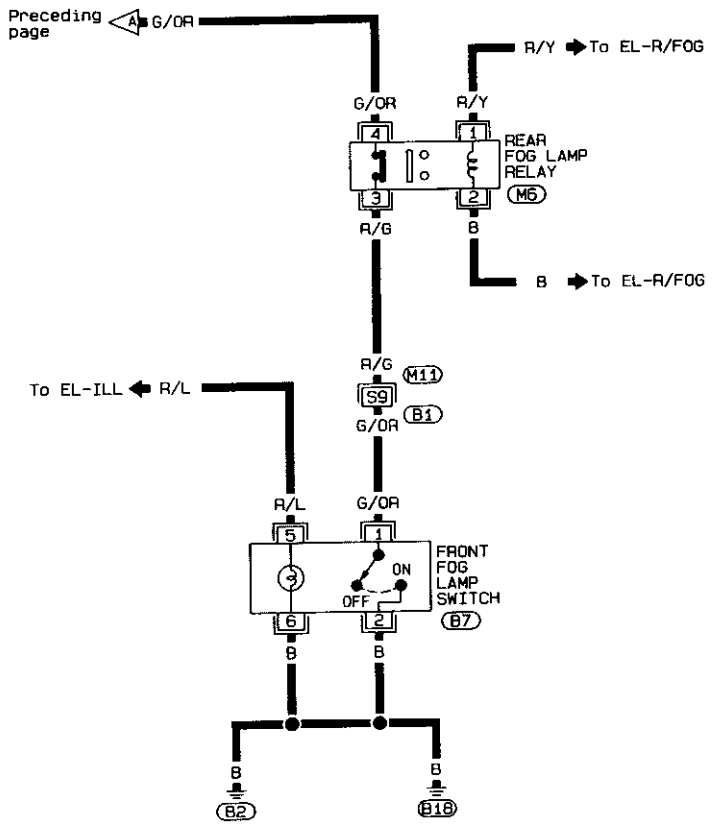

Refer to last page (Foldout page).

M11, B1

SEL699T

Front Fog Lamp/Wiring Diagram — F/FOG — (Cont'd)

LHD MODELS WITHOUT DAYTIME LIGHT SYSTEM

EL-F/FOG-03

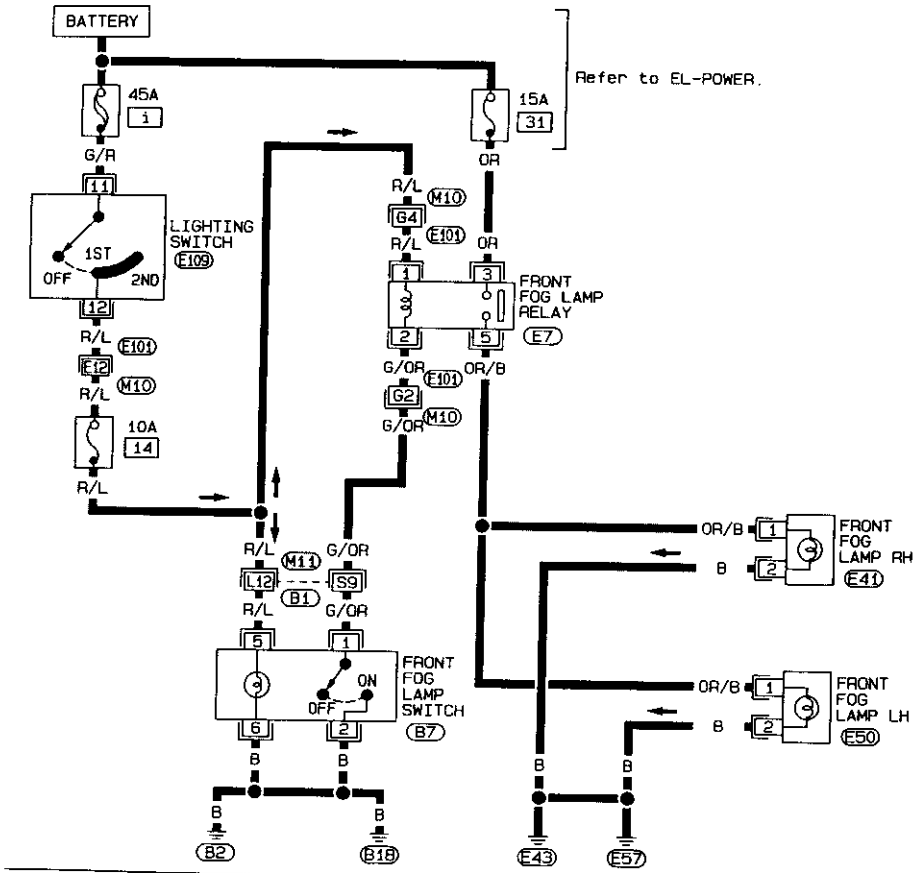

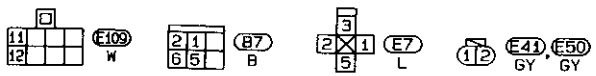

Refer to last page (Foldout page).

M10, E101

M11, B1

SEL700T

Front Fog Lamp/Wiring Diagram — F/FOG — (Cont'd)

RHD MODELS FOR EUROPE

EL-F/FOG-04

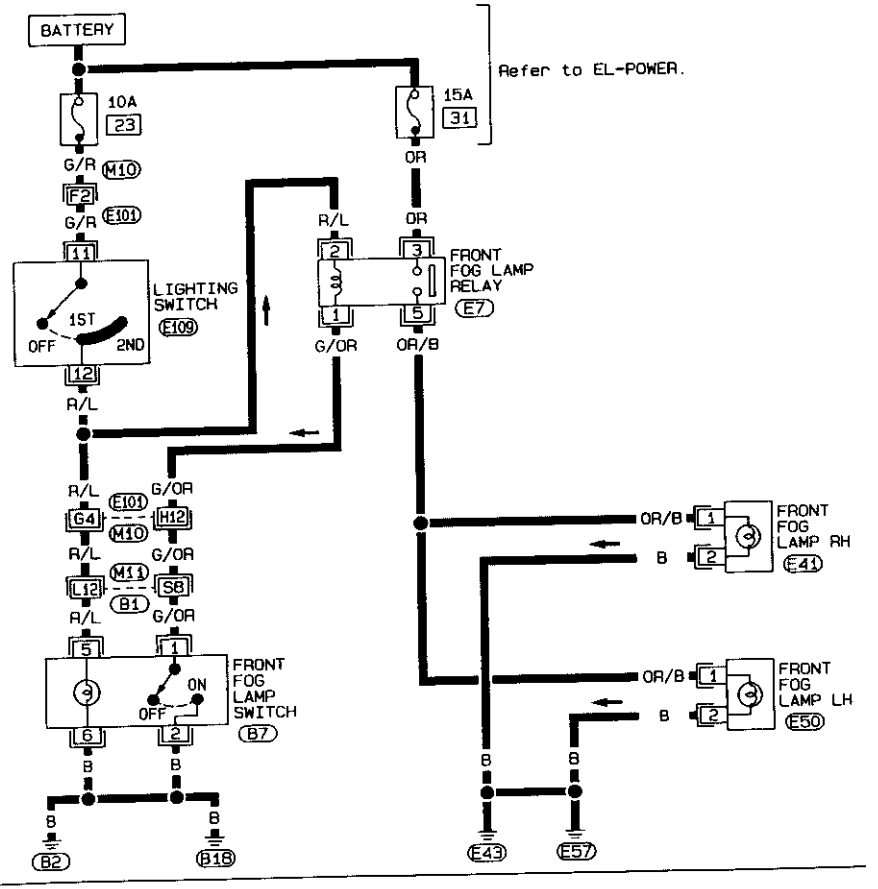

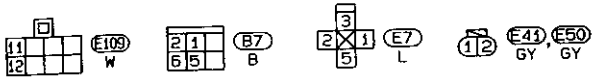

Refer to last page (Foldout page).

M10, E101

M11, B1

SEL701T

Front Fog Lamp/Wiring Diagram — F/FOG — (Cont'd)

RHD MODELS EXCEPT FOR EUROPE

EL-F/FOG-05

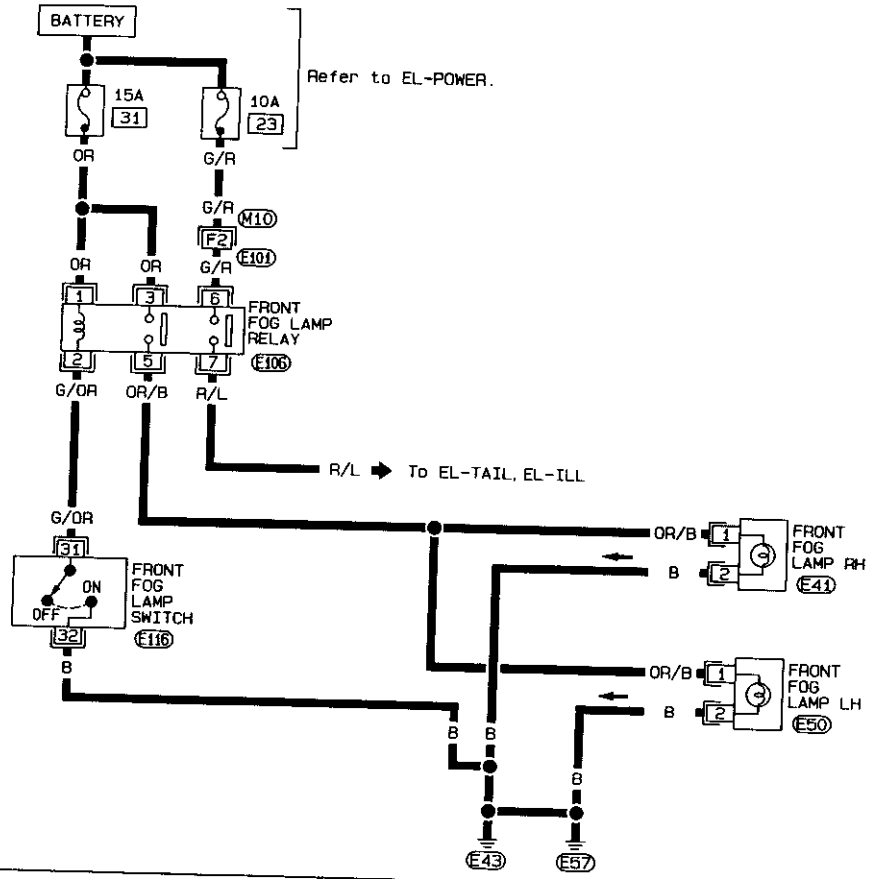

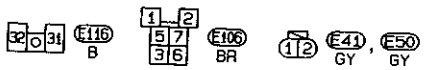

Refer to last page (Foldout page).

M10, E101

SEL702T

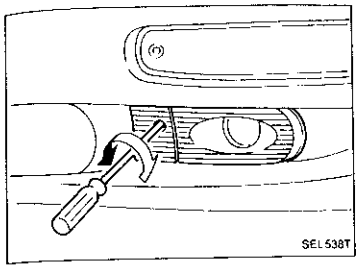

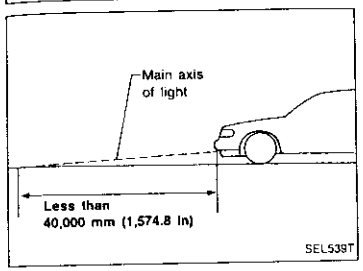

Front Fog Lamp Aiming Adjustment

Before performing aiming adjustment, make sure of the following.

a. Keep all tires inflated to correct pressure.
b. Place vehicle on level ground.
c. See that vehicle is unloaded (except for full levels of coolant, engine oil and fuel, and spare tire, jack, and tools). Have the driver or equivalent weight placed in driver's seat.

Adjust aiming in the vertical direction by turning the adjusting screw.

Check the distance between the vehicle and the ground point where the main axis of light of fog lamp reaches. Keep the distance within 40,000 mm (1,574.8 in).

Rear Fog Lamp/System Description

Power is supplied at all times
- through 7.5A fuse (No. 27 for LHD models, No. 29 for RHD models, located in the fuse block)
- to rear fog lamp relay terminal ⑦ (with daytime light system) or ③ (without daytime light system)

With the lighting switch in the 2ND position, power is supplied
- through 20A fuse (No. 37 , located in the fusible link and fuse box)
- to lighting switch terminal ⑤
- through lighting switch terminal ㉕
- to rear fog lamp relay terminal ①.

Rear fog lamp operation

The lighting switch must be in the 2ND position for rear fog lamp operation.
Ground is supplied to rear fog lamp relay terminal ② through body ground (M1).
With the lighting switch in the 2nd position, the rear fog lamp relay is energized and power is supplied
- through rear fog lamp relay terminal ⑥ (with daytime light system) or ⑤ (without daytime light system)
- to rear fog lamp switch terminal ②.

With the rear fog lamp switch in the ON position, power is supplied
- through rear fog lamp switch terminal ①
- to terminal ① of rear fog lamp.

Ground is supplied to terminal ② of rear fog lamp through body ground (T19).
With power and ground supplied, the rear fog lamp illuminates.

Rear Fog Lamp/Wiring Diagram — R/FOG —

WITH DAYTIME LIGHT SYSTEM

EL-R/FOG-01

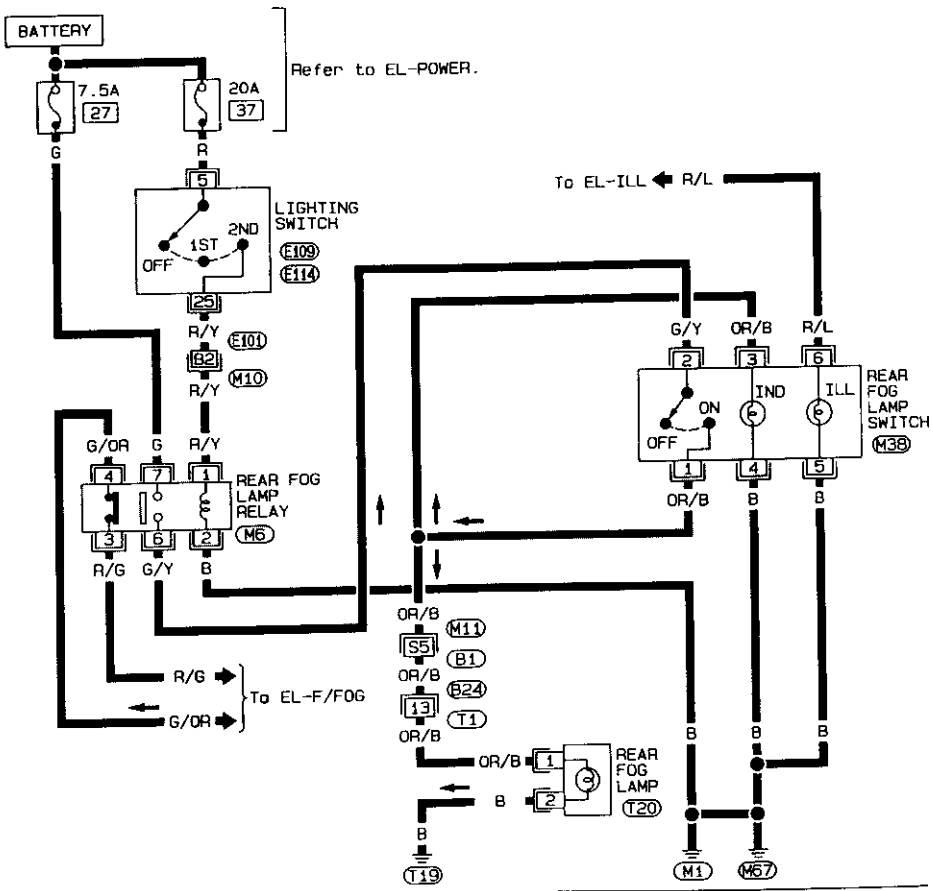

Rear Fog Lamp/Wiring Diagram — R/FOG — (Cont'd)

WITHOUT DAYTIME LIGHT SYSTEM

EL-R/FOG-02

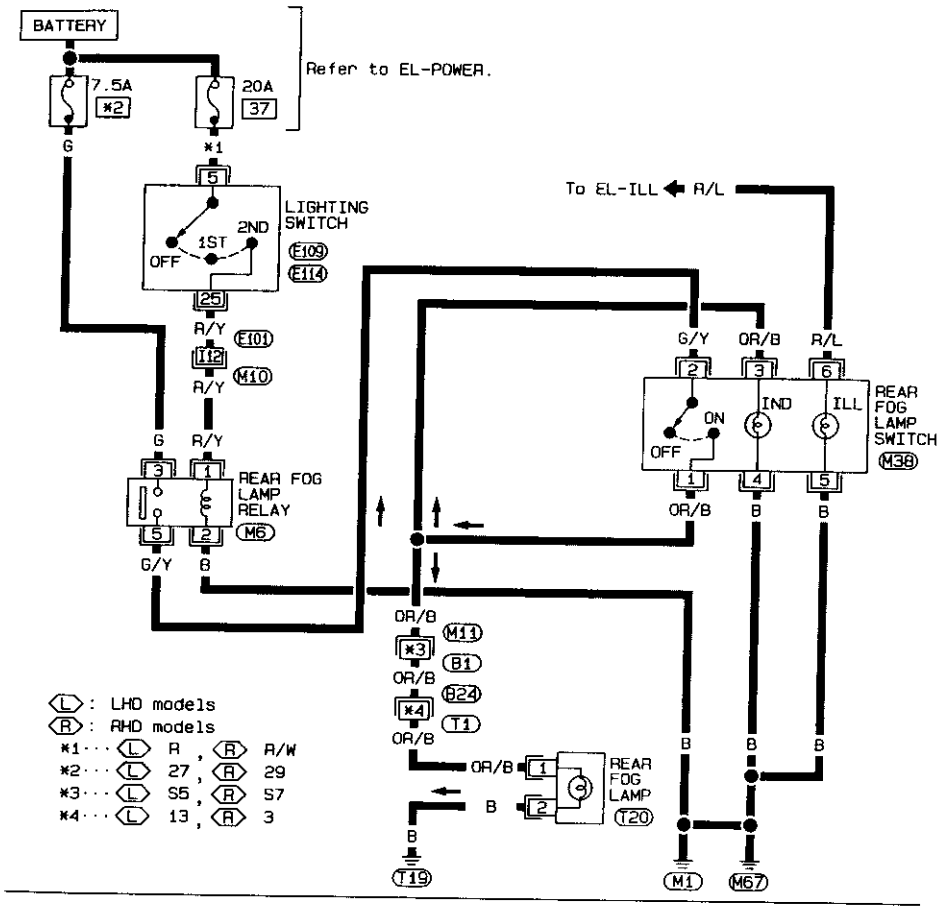

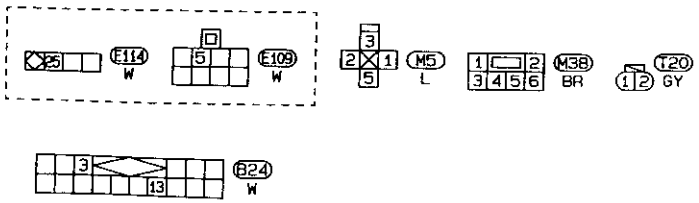

Refer to last page (Foldout page).

M10, E101
M11, B1

SEL704T

Turn Signal and Hazard Warning Lamps/System Description

TURN SIGNAL OPERATION

With the hazard switch in the OFF position and the ignition switch in the ON or START position, power is supplied
- through 10A fuse (No. 24 , located in the fuse block)
- to hazard switch terminal ②
- through terminal ① of the hazard switch
- to combination flasher unit terminal ②
- through terminal ③ of the combination flasher unit
- to turn signal switch terminal ①.

Ground is supplied to combination flasher unit terminal ① through body ground M1 or M67.

LH turn

When the turn signal switch is moved to the LH position, power is supplied from turn signal switch terminal ③ to
- front turn signal lamp LH terminal ①
- side turn signal lamp LH terminal ①
- rear combination lamp LH terminal ②
- combination meter terminal ⑰.

Ground is supplied to the front turn signal lamp LH terminal ② through body ground E57.
Ground is supplied to the side turn signal lamp LH terminal ② through body ground E57 (LHD models) or F37 (RHD models).
Ground is supplied to the rear combination lamp LH terminal ④ through body ground T19.
Ground is supplied to combination meter terminal ⑱ through body ground M1.
With power and ground supplied, the combination flasher unit controls the flashing of the LH turn signal lamps.

RH turn

When the turn signal switch is moved to the RH position, power is supplied from turn signal switch terminal ② to
- front turn signal lamp RH terminal ①
- side turn signal lamp RH terminal ①
- rear combination lamp RH terminal ②
- combination meter terminal ⑲.

Ground is supplied to the front turn signal lamp RH terminal ② through body ground E43.
Ground is supplied to the side turn signal lamp RH terminal ② through body ground F26 (LHD models) or E43 (RHD models).
Ground is supplied to the rear combination lamp RH terminal ④ through body ground T19.
Ground is supplied to combination meter terminal ⑱ through body ground M1.
With power and ground supplied, the combination flasher unit controls the flashing of the RH turn signal lamps.

HAZARD LAMP OPERATION

Power is supplied at all times to hazard switch terminal ③ through:
- 10A fuse (No. 22 , located in the fuse block).

With the hazard switch in the ON position, power is supplied
- through terminal ① of the hazard switch
- to combination flasher unit terminal ②
- through terminal ③ of the combination flasher unit
- to hazard switch terminal ④.

Ground is supplied to combination flasher unit terminal ① through body ground M1 or M67.
Power is supplied through terminal ⑤ of the hazard switch to
- front turn signal lamp LH terminal ①
- side turn signal lamp LH terminal ①
- rear combination lamp LH terminal ②
- combination meter terminal ⑰.

Power is supplied through terminal ⑥ of the hazard switch to

Turn Signal and Hazard Warning Lamps/System Description (Cont'd)

- front turn signal lamp RH terminal ①
- side turn signal lamp RH terminal ①
- rear combination lamp RH terminal ②
- combination meter terminal ⑲.

Ground is supplied to terminal ② of each front turn signal lamp through body ground (E43) or (E57).
Ground is supplied to terminal ② of driver's side turn signal lamp through body ground (E43) or (E57).
Ground is supplied to terminal ② of passenger side turn signal lamp through body ground (F25) or (F37).
Ground is supplied to terminal ④ of the rear combination lamps through body ground (T19).
Ground is supplied to combination meter terminal ⑱ through body ground (M1).
With power and ground supplied, the combination flasher unit controls the flashing of the hazard warning lamps.

WITH MULTI-REMOTE CONTROL SYSTEM

Power is supplied at all times

- through 10A fuse (No. 22 located in the fuse block)
- to multi-remote control relay-1 terminals ①, ⑥ and ③.

Ground is supplied to multi-remote control relay-1 terminal ②, when the multi-remote control system or theft warning system is triggered through the smart entrance control unit.
Refer to "MULTI-REMOTE CONTROL SYSTEM" or "THEFT WARNING SYSTEM".
The multi-remote control relay-1 is energized.
Power is supplied through terminal ⑦ of the multi-remote control relay-1

- to front turn signal lamp LH terminal ①
- to side turn signal lamp LH terminal ①
- to rear combination lamp LH terminal ②
- to combination meter terminal ⑰.

Power is supplied through terminal ⑤ of the multi-remote control relay-1

- to front turn signal lamp RH terminal ①
- to side turn signal lamp RH terminal ①
- to rear combination lamp RH terminal ②
- to combination meter terminal ⑲.

Ground is supplied to terminal ② of each front turn signal lamp through body ground (E43) or (E57).
Ground is supplied to terminal ② of driver's side turn signal lamp through body ground (E43) or (E57).
Ground is supplied to terminal ② of passenger side turn signal lamp through body ground (F26) or (F37).
Ground is supplied to terminal ④ of the rear combination lamps through body ground (T19).
Ground is supplied to combination meter terminal ⑱ through body ground (M1).
With power and ground supplied, the smart entrance control unit controls the flashing of the hazard warning lamps.

Turn Signal and Hazard Warning Lamps/Schematic

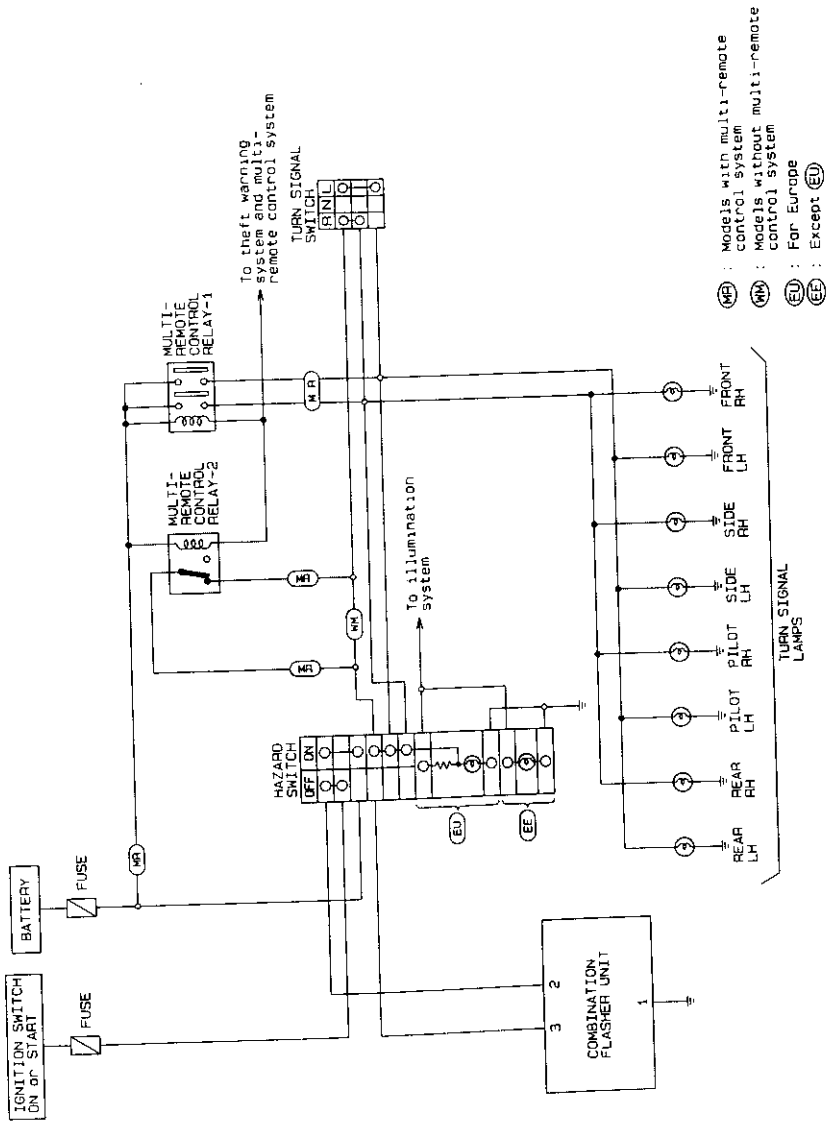

SEL705T

Turn Signal and Hazard Warning Lamps/Wiring Diagram — TURN —

LHD MODELS

EL-TURN-01

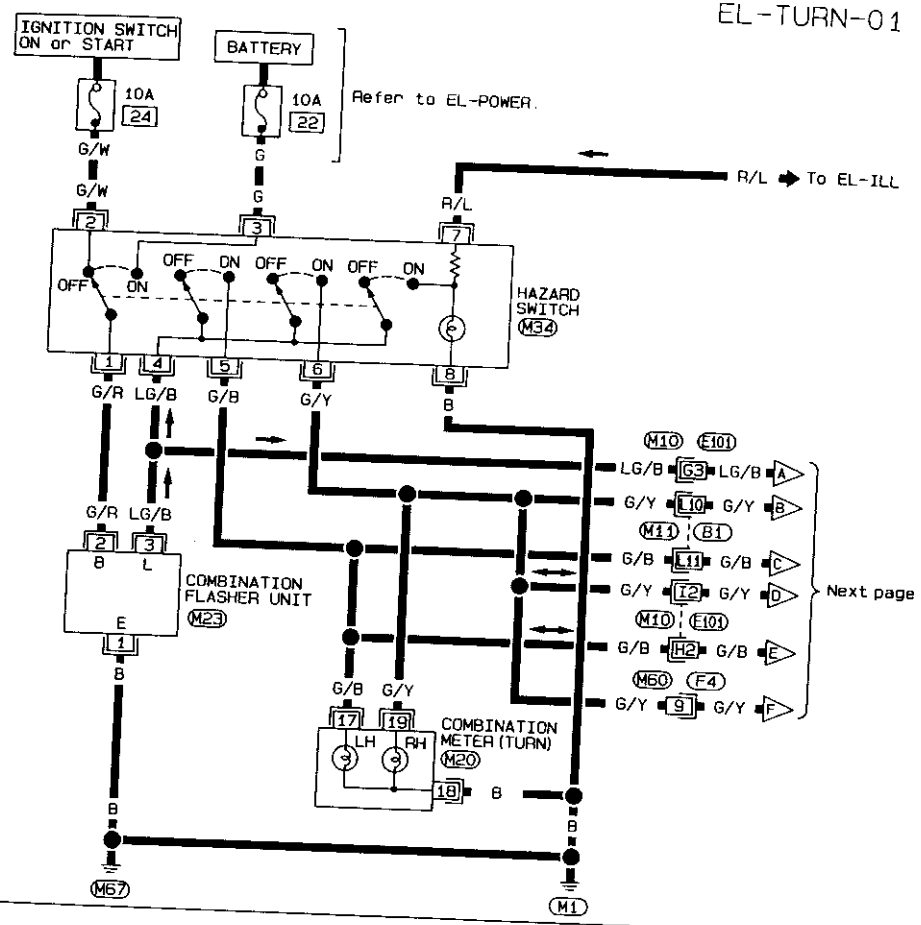

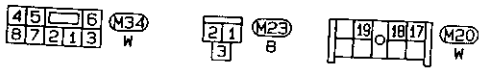

Refer to last page (Foldout page).

M10, E101
M11, B1
M60, F4

SEL706T

Turn Signal and Hazard Warning Lamps/Wiring Diagram — TURN — (Cont'd)

EL-TURN-02

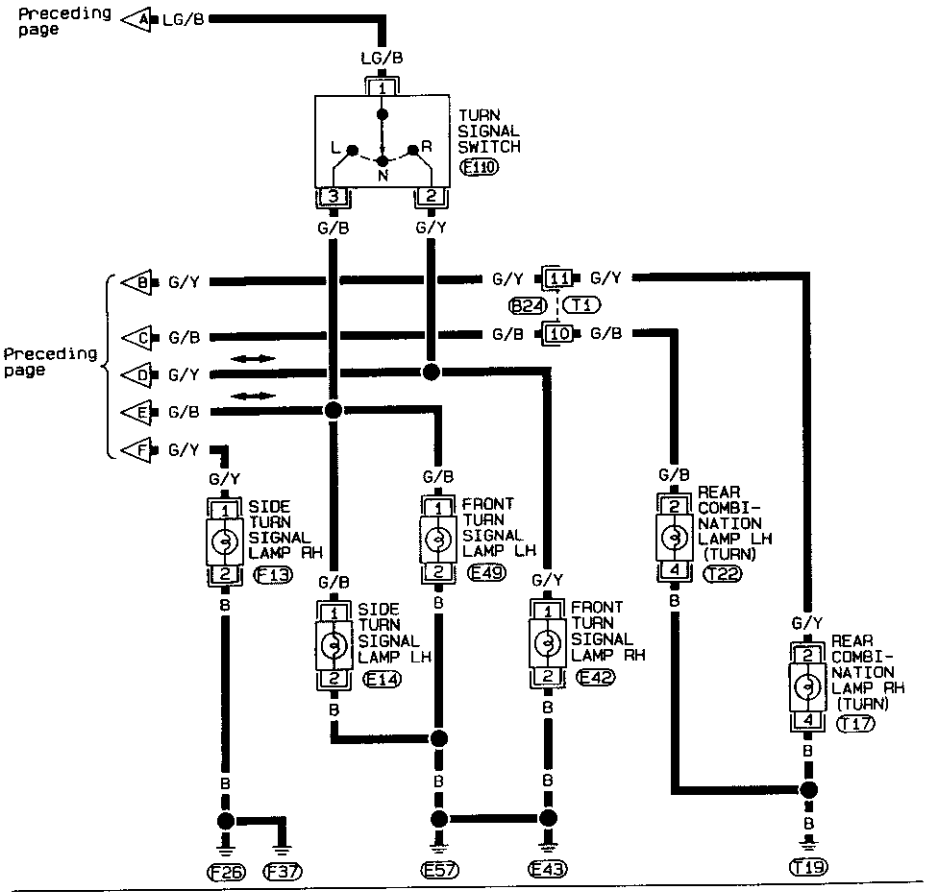

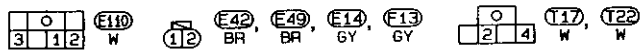

SEL707T

Turn Signal and Hazard Warning Lamps/Wiring Diagram — TURN — (Cont'd)

RHD MODELS

EL-TURN-03

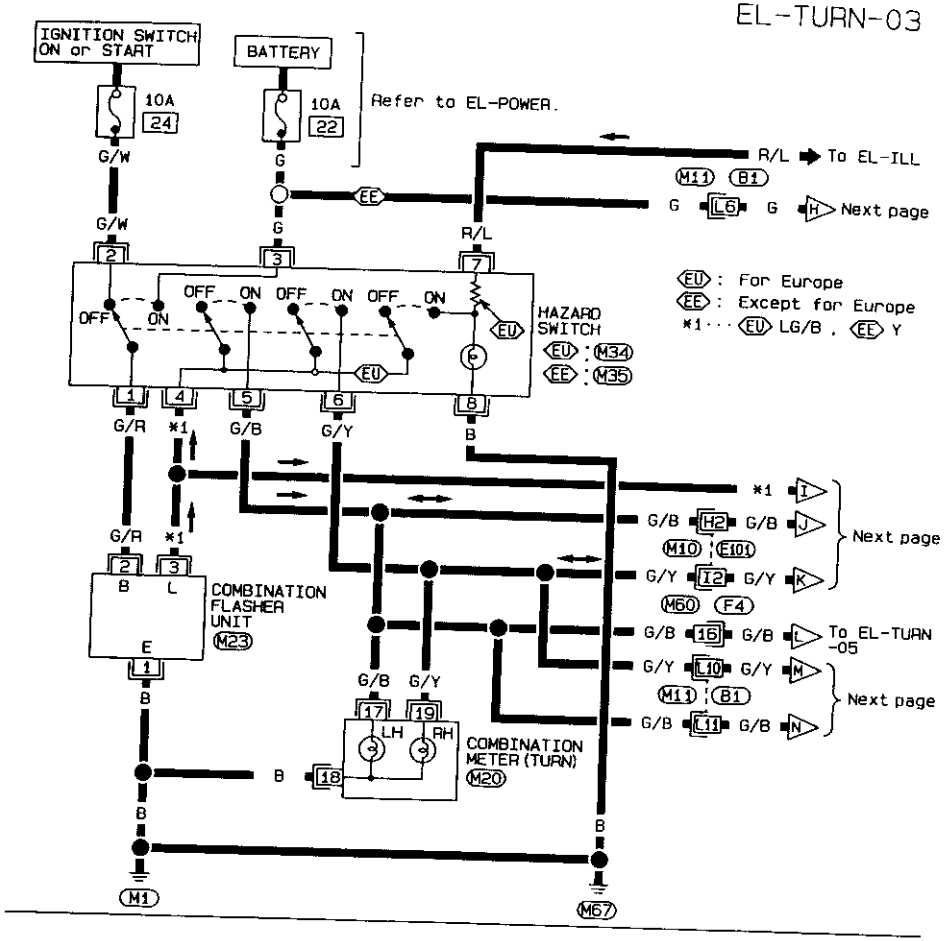

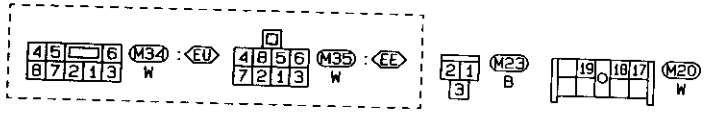

Refer to last page (Foldout page).

M10 , E101

M11 , B1

M60 , F4

SEL708T

Turn Signal and Hazard Warning Lamps/Wiring Diagram — TURN — (Cont'd)

EL-TURN-04

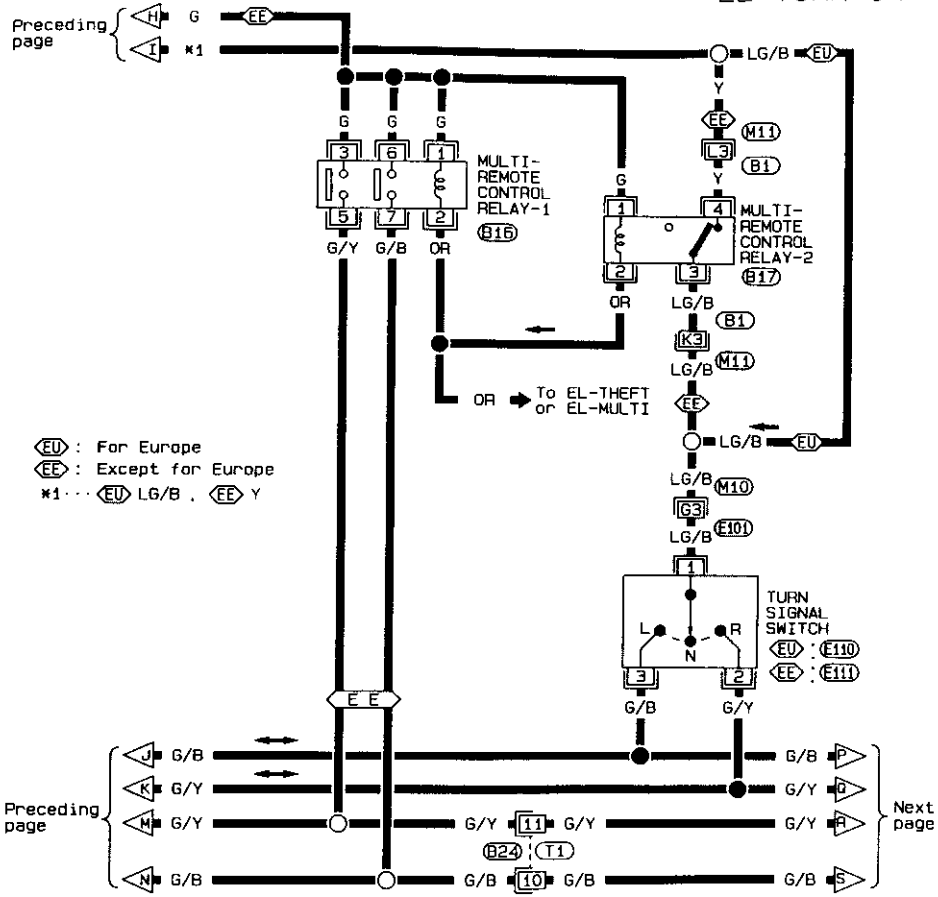

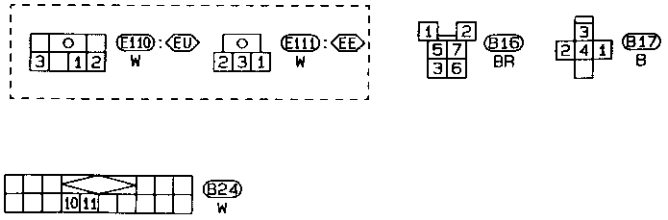

Refer to last page (Foldout page).

M10 , E101

M11 , B1

SEL709T

Turn Signal and Hazard Warning Lamps/Wiring Diagram — TURN — (Cont'd)

EL-TURN-05

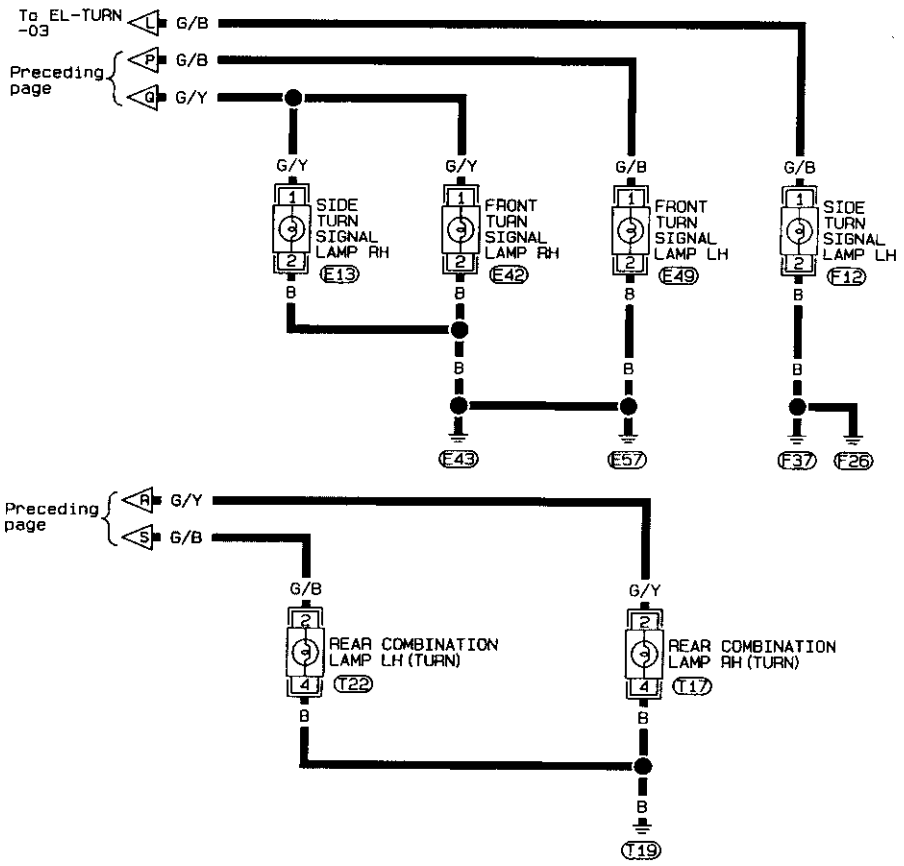

E42, E49, E13, F12
BR, BR, GY, GY

T17, T22
W, W

SEL710T

Turn Signal and Hazard Warning Lamps/Trouble Diagnoses

Symptom	Possible cause	Repair order
Turn signal and hazard warning lamps do not operate.	1. Hazard switch 2. Combination flasher unit 3. Open in combination flasher unit circuit	1. Check hazard switch. 2. Refer to combination flasher unit check. (EL-101) 3. Check wiring to combination flasher unit for open circuit.
Turn signal lamps do not operate but hazard warning lamps operate.	1. 10A fuse 2. Hazard switch 3. Turn signal switch 4. Open in turn signal switch circuit	1. Check 10A fuse (No. 24, located in fuse block). Turn ignition switch ON and verify battery positive voltage is present at terminal ② of hazard switch. 2. Check hazard switch. 3. Check turn signal switch. 4. Check wire between combination flasher unit and turn signal switch for open circuit.
Hazard warning lamps do not operate but turn signal lamps operate.	1. 10A fuse 2. Hazard switch 3. Open in hazard switch circuit	1. Check 10A fuse (No. 22, located in fuse block). Verify battery positive voltage is present at terminal ③ of hazard switch. 2. Check hazard switch. 3. Check wire between combination flasher unit and hazard switch for open circuit.
Front turn signal lamp LH or RH does not operate.	1. Bulb 2. Ground E43 or E57	1. Check bulb. 2. Check ground E43 or E57.
Side turn signal lamp on driver's side does not operate.	1. Bulb 2. Ground E43 or E57	1. Check bulb. 2. Check ground E43 or E57.
Side turn signal lamp on passenger side does not operate.	1. Bulb 2. Ground F26 or F37	1. Check bulb. 2. Check ground F26 or F37.
Rear turn signal lamp LH or RH does not operate.	1. Bulb 2. Ground T19	1. Check bulb 2. Check ground T19.
LH and RH turn indicators do not operate.	1. Ground	1. Check ground M1.
LH or RH turn indicator does not operate.	1. Bulb	1. Check bulb in combination meter.

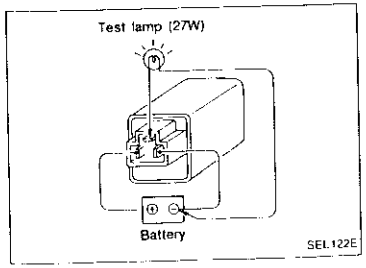

Combination Flasher Unit Check

- Before checking, ensure that bulbs meet specifications.
- Connect a battery and test lamp to the combination flasher unit, as shown. Combination flasher unit is properly functioning if it blinks when power is supplied to the circuit.

Bulb Specifications

Item	Wattage (W)
Front fog lamp	55
Front turn signal lamp	21
Clearance lamp	5
Side turn signal lamp	5
Rear combination lamp	
Turn signal lamp	21
Stop/Tail lamp	21/5
Back-up lamp	21
License plate lamp	5
Rear fog lamp	21
High-mounted stop lamp	5

Illumination/System Description

Power supply routing for illumination lamps are the same as that of clearance, license and LH tail lamp. Refer to "Clearance, License and Tail Lamps".
On vehicles for Europe and Australia, illumination of combination meter and clock is controlled by illumination control switch.
The illumination control switch that controls the amount of current to the illumination system. As the amount of current increases, the illumination becomes brighter.
The following chart shows the power and ground connector terminals for the components included in the illumination system.

Component	Connector No.	Power terminal	Ground terminal	Ground
Audio	M40	8	— (Unit ground)	—
Push control unit	M32	15	16	(M1) or (M67)
Auto A/C unit	M31	13	14	(M1) or (M67)
A/T indicator	B8	7	6	(B2) or (B18)
Power window main switch	D9	15	16	(M1) or (M67)
Cigarette lighter	M42	3	1	(M1) or (M67)
Combination meter	M20	6	33	(*1)
Clock	M20	8	33	(*1)
Hazard switch (For Europe)	M34	7	8	(M1) or (M67)
Hazard switch (Except for Europe)	M35	7	8	(M1) or (M67)
Glove box lamp (switch)	M103	2	1	(M1) or (M67)
Front fog lamp switch	B7	5	6	(B2) or (B18)
Rear fog lamp switch	M38	6	5	(M1) or (M67)
Headlamp washer switch	M36	4	3	(M1) or (M67)
Rear window defogger switch	M37	5	6	(M1) or (M67)
Illumination control switch	M21	1	3	(M1) or (M67)

*1: For Europe and Australia models ... Illumination control switch
Except for Europe and Australia models ... (M1) or (M67)

Illumination/Schematic

(R) : RHD models
(EU) : For Europe
(EE) : Except for Europe
(OL) : LHD models with daytime light system
(EL) : LHD models without daytime light system
(NE) : Except (EL)
(AA) : Models with auto A/C
(MA) : Models without auto A/C
(NU) : Except for Australia
(AE) : For Europe and Australia
(NA) : Except (AE)

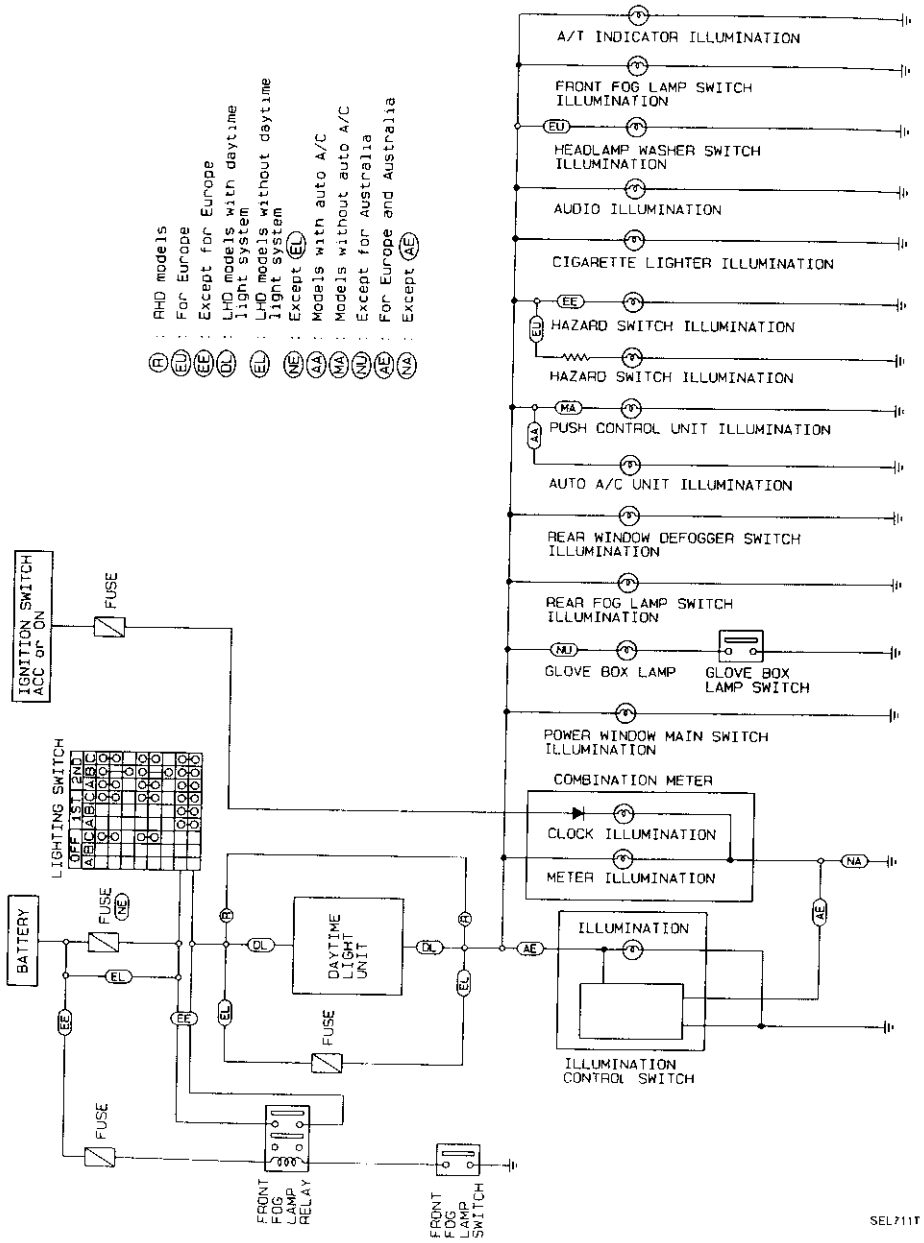

Illumination/Wiring Diagram — ILL —

EL-ILL-01

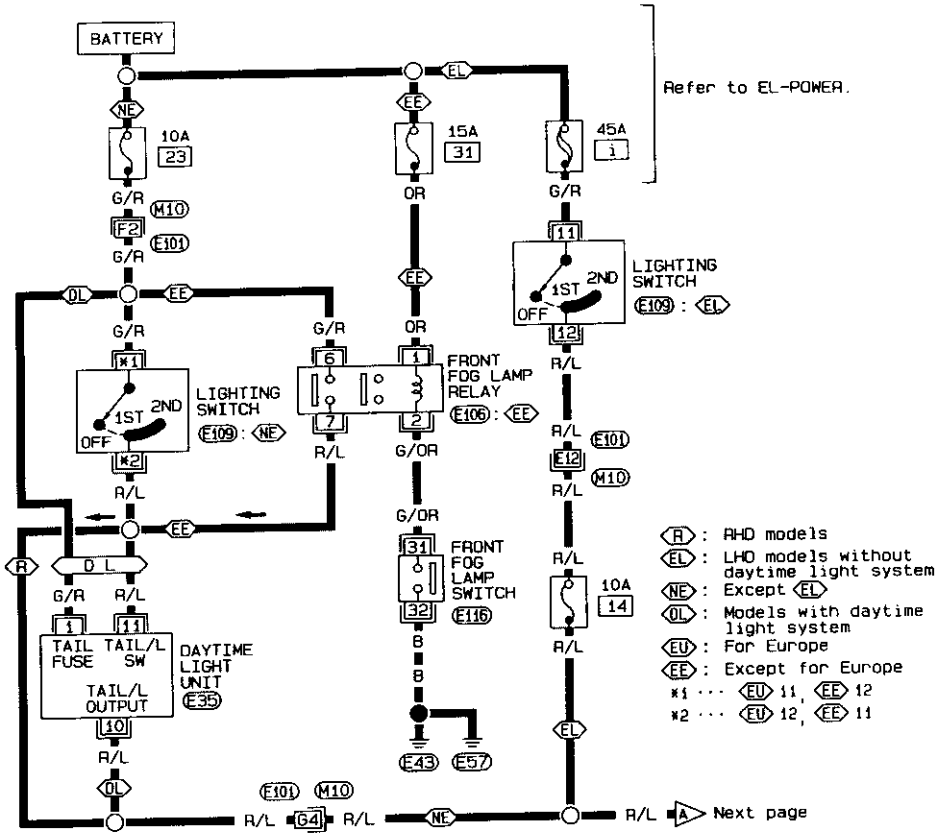

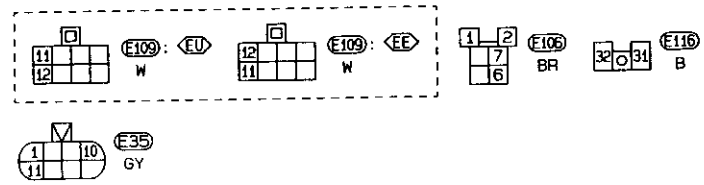

Refer to last page (Foldout page).
M10 , E101

SEL712T

EL-ILL-02

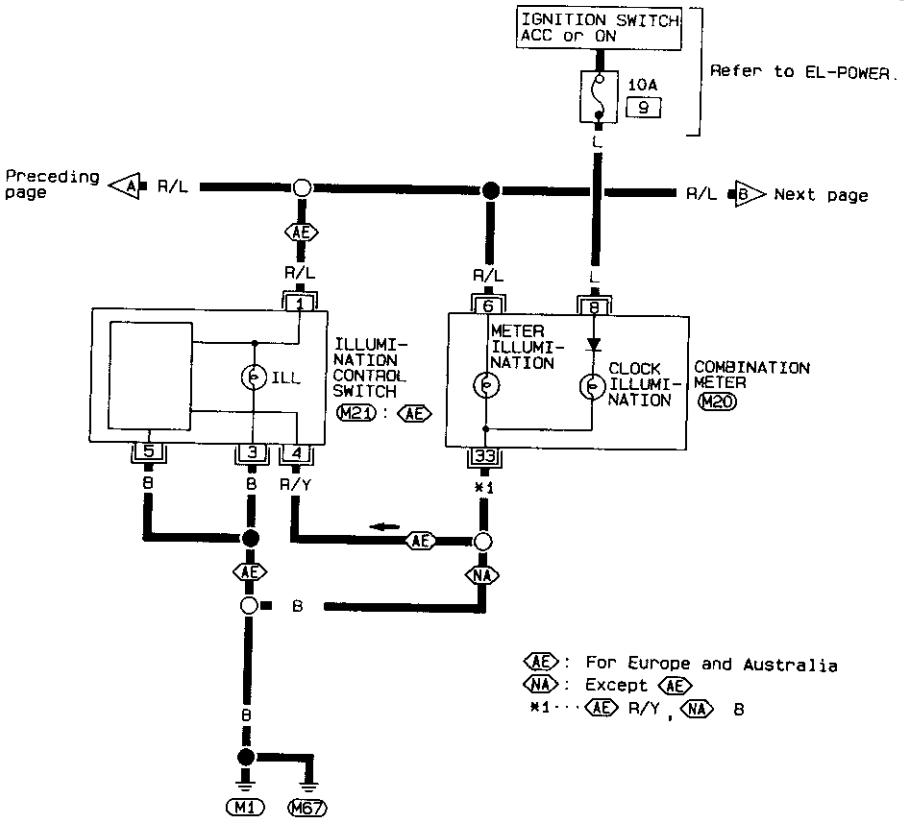

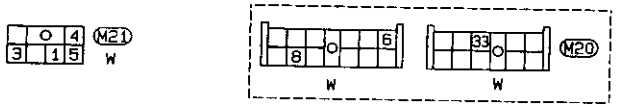

SEL713T

EL-ILL-03

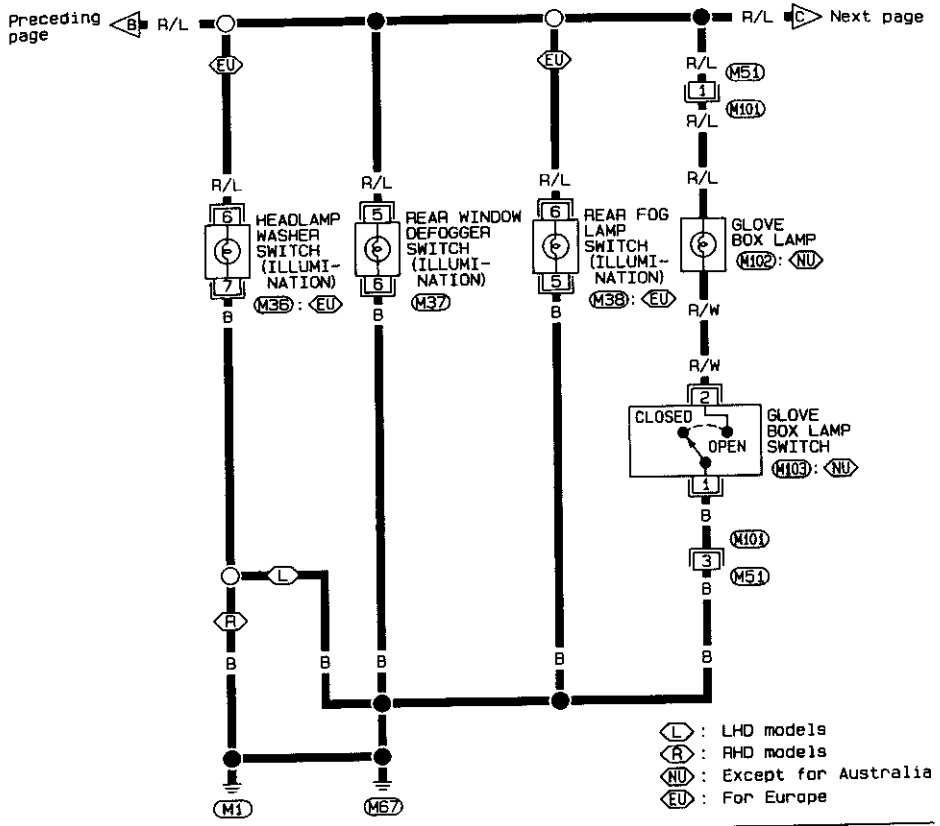

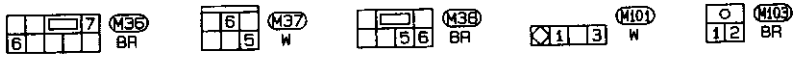

SEL714T

EL-ILL-04

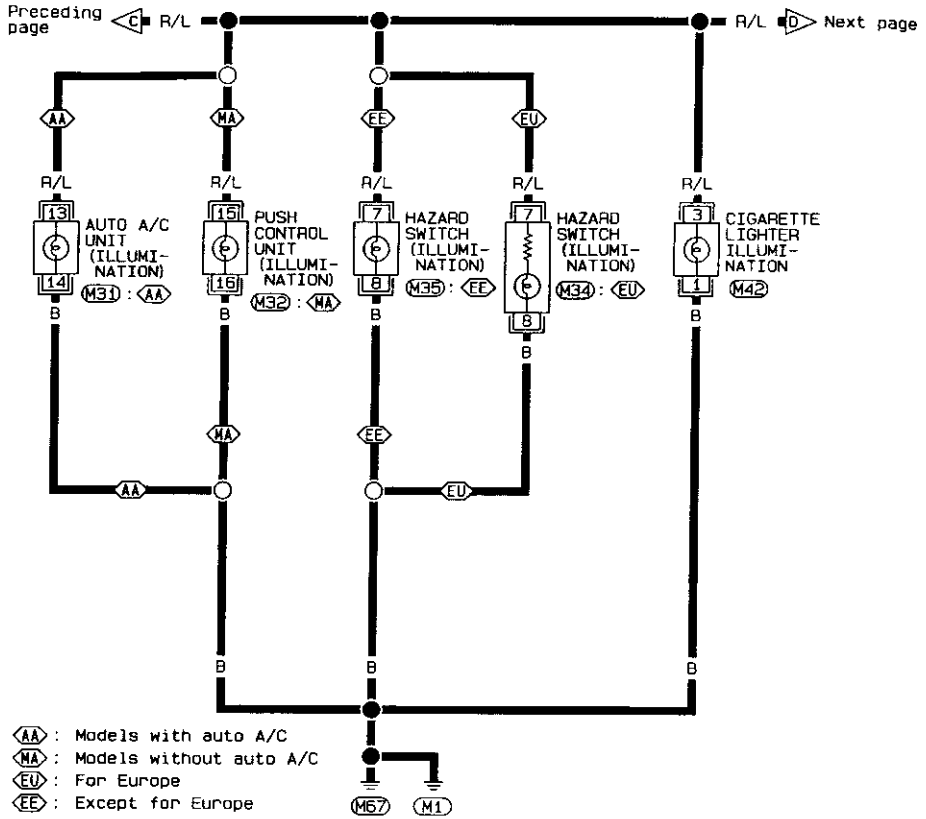

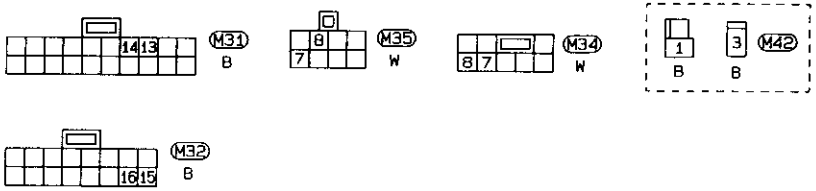

SEL715T

EL-ILL-05

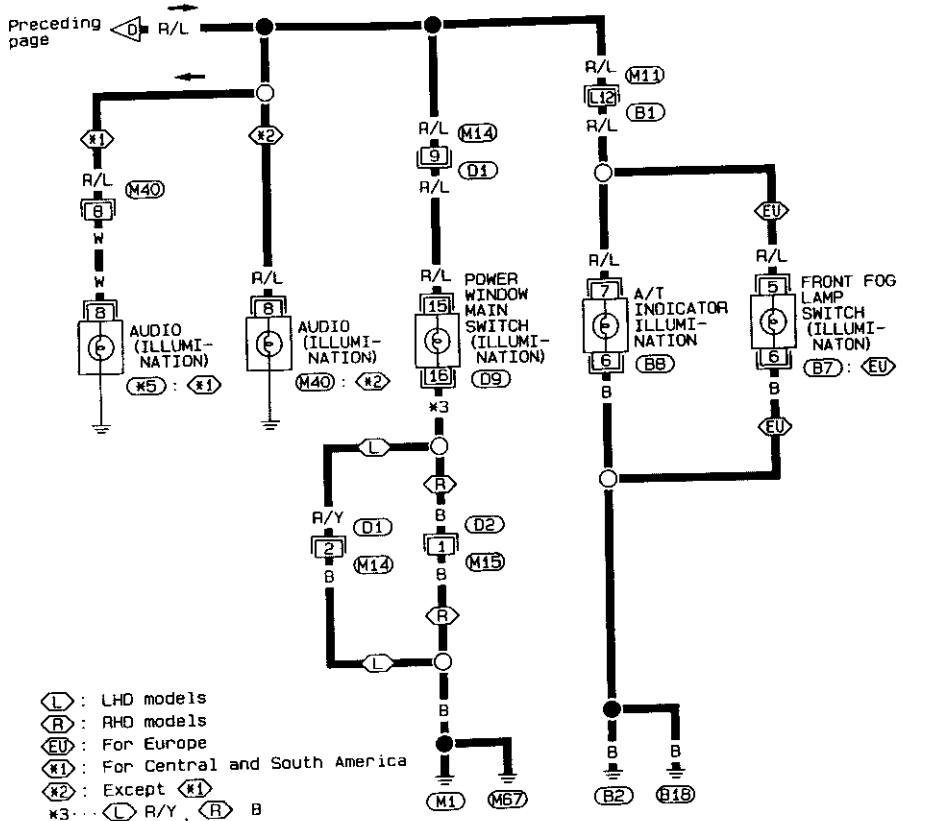

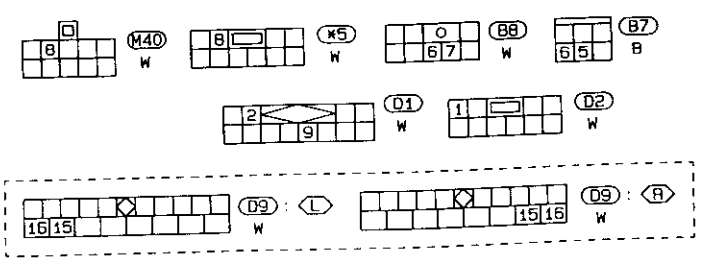

Refer to last page (Foldout page).

M11 , B1

SEL716T

Interior, Spot and Trunk Room Lamps/System Description

Power is supplied at all times
- through 10A fuse (No. 21) located in the fuse block)
- to interior lamp terminal ①.
- to spot lamp terminal ① and
- to trunk room lamp terminal ①.

INTERIOR LAMP

Switch operation

With interior lamp switch in the ON position, ground is supplied to turn interior lamp on.
When a door switch is set to OPEN with interior lamp switch in the DOOR position, ground is supplied
- to interior lamp terminal ②
- through diode (M43) terminal ① (Except for Europe models)
- to diode (M43) terminal ② (Except for Europe models)
- through diode (M44) terminal ① (Except for Europe models)
- to diode (M44) terminal ② (Except for Europe models)
- through door switch passenger side terminal ① or
- through door switch driver's side terminal ②,
- through door switch unit ground.

Interior lamp control by multi-remote control system

When the smart entrance control unit receives a signal from multi-remote controller to unlock the door with interior lamp switch set in DOOR position, ground is supplied
- to interior lamp terminal ②
- through smart entrance control unit terminal ⑨,
- through smart entrance control unit terminal ⑩ and
- through body ground (M1).

With power and ground supplied, the interior lamp illuminates.
For smart entrance control unit, refer to "MULTI-REMOTE CONTROL SYSTEM".

TRUNK ROOM LAMP

When the trunk room lamp switch is set to OPEN, ground is supplied
- to trunk room lamp terminal ②
- through trunk room switch terminal ①,
- through trunk room lamp switch terminal ② and
- through body ground (T19).

With power and ground supplied, the trunk room lamp illuminates.

SPOT LAMP

With the spot lamp switch in the ON position, ground is supplied
- to spot lamp terminal ②
- through body ground (M1) or (M67).

With power and ground supplied, the spot lamp illuminates.

Bulb Specifications

Item	Wattage (W)
Interior lamp	10
Spot lamp	10
Trunk room lamp	3.4

Interior, Spot and Trunk Room Lamps/Wiring Diagram — INT/L —

LHD MODELS

EL-INT/L-01

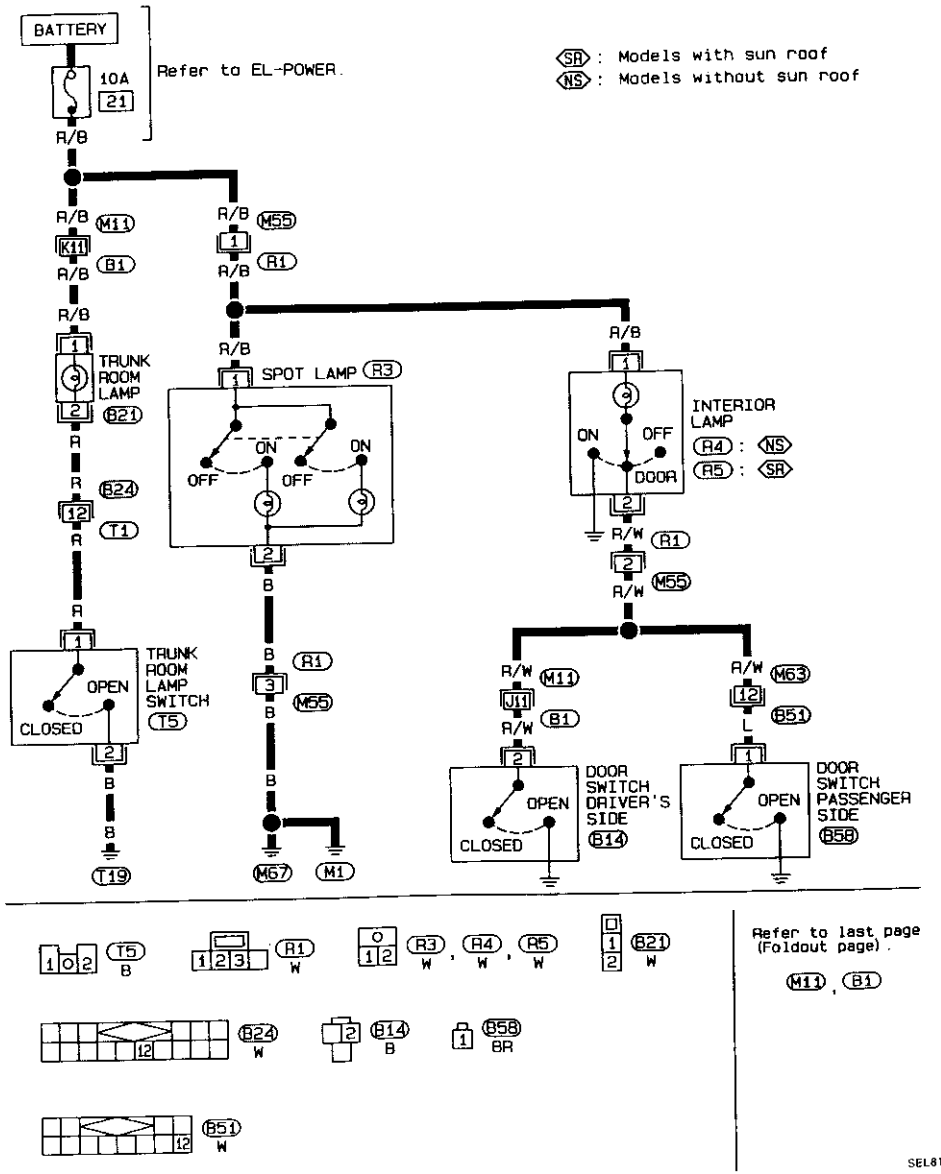

Interior, Spot and Trunk Room Lamps/Wiring Diagram — INT/L — (Cont'd)

RHD MODELS

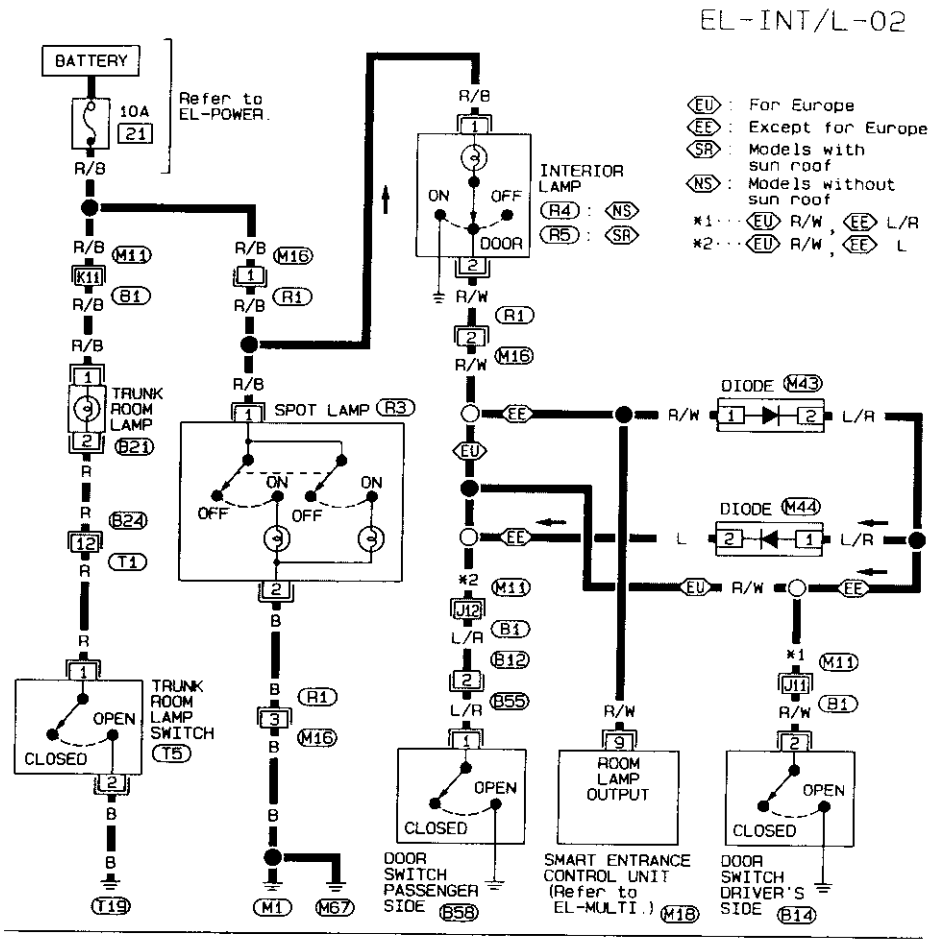

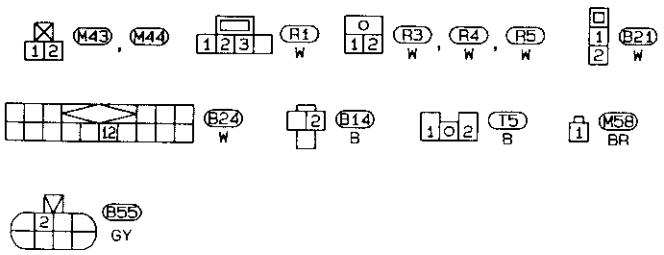

Refer to last page (Foldout page).
M11, B1
M18

SEL816T

System Description

With the ignition switch in the ON or START position, power is supplied
- through 7.5A fuse (No. 25), located in the fuse block)
- to combination meter terminal ㉑.

Ground is supplied
- to combination meter terminal ㉒
- through body ground M1.

WATER TEMPERATURE GAUGE

The water temperature gauge indicates the engine coolant temperature. The reading on the gauge is based on the resistance of the thermal transmitter.
As the temperature of the coolant increases, the resistance of the thermal transmitter decreases. A variable ground is supplied to terminal ⑬ of the combination meter for the water temperature gauge.
The needle on the gauge moves from "C" to "H".

TACHOMETER

The tachometer indicates engine speed in revolutions per minute (rpm).
The tachometer is regulated by a signal
- from terminal ⑦ of the ECM (ECCS control module)
- to combination meter terminal ⑫ for the tachometer.

FUEL GAUGE

The fuel gauge indicates the approximate fuel level in the fuel tank.
The fuel gauge is regulated by a variable ground signal supplied
- to combination meter terminal ⑳ for the fuel gauge
- from terminal ① of the fuel tank gauge unit
- through terminal ③ of the fuel tank gauge unit and
- through body grounds T19, B2 and B18.

SPEEDOMETER

The vehicle speed sensor provides a voltage signal to the combination meter for the speedometer.
The voltage is supplied
- to combination meter terminals ㉘ and ㉟ for the speedometer
- from terminals ① and ② of the vehicle speed sensor.

The speedometer converts the voltage into the vehicle speed displayed.

Inspection/Fuel Gauge and Water Temperature Gauge

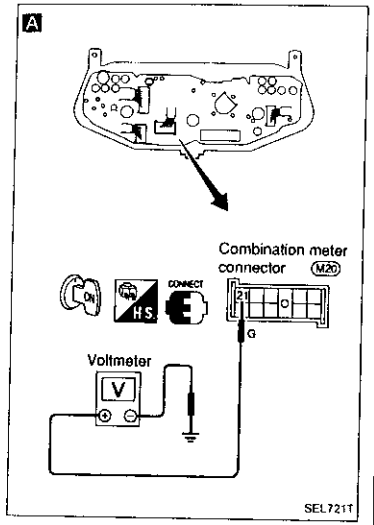

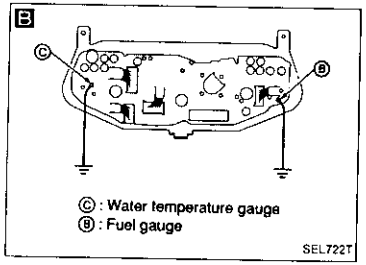

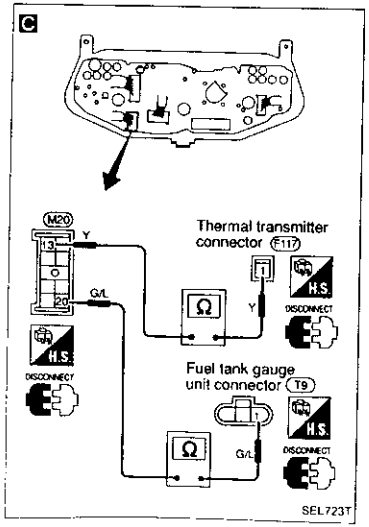

INSPECTION START

A

CHECK POWER SOURCE.
1) Turn ignition switch "ON".
2) Check voltage between terminal ㉑ and ground.
Battery voltage should exist.

NG → Check the following items.
1) Harness continuity between battery terminal and combination meter
2) Ignition relay
3) Fusible link and fuse
4) Ignition switch

OK ↓

B

CHECK GAUGE OPERATION.
1) Turn ignition switch "ON".
2) Connect terminals Ⓑ (Fuel), Ⓒ (Temp.) and ground with wire for **less than 10 seconds.**
3) Check operation of gauge.
Gauge should move smoothly to full scale.

NG → Repair or replace gauge.

OK ↓

C

Check harness continuity between combination meter harness terminal ⑬ and thermal transmitter harness terminal ①.
Check harness continuity between combination meter harness terminal ⑳ and fuel tank gauge unit harness terminal ①.
Continuity should exist.

NG → Repair or replace.

OK ↓

CHECK COMPONENT.
Check gauge units and harness.
Refer to "Fuel Tank Gauge Unit Check" (EL-120) or "Thermal Transmitter Check" (EL-120).

NG → Repair or replace.
Refer to FE section. (Fuel gauge)

OK ↓

(Go to Ⓐ on next page)

Inspection/Fuel Gauge and Water Temperature Gauge (Cont'd)

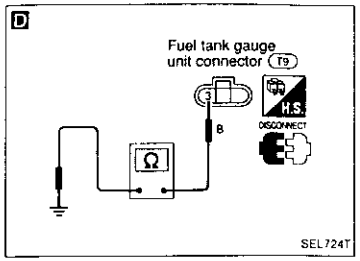

Ⓐ ↓

D

Check harness continuity between fuel tank gauge unit harness terminal ③ and body ground.
Continuity should exist.

NG → Repair harness or connector.

OK ↓

Reinstall any part removed ↓

INSPECTION END

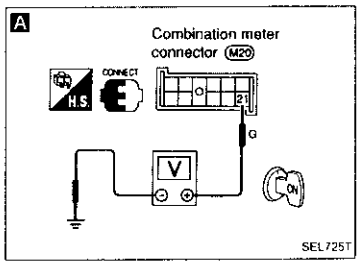

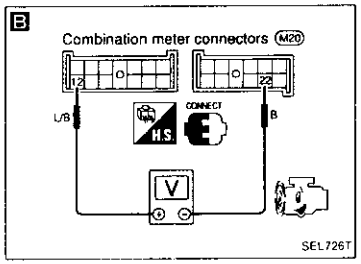

Inspection/Tachometer

INSPECTION START

A

CHECK POWER SOURCE.
1) Turn ignition switch "ON".
2) Check voltage between terminal ㉑ and ground.
Battery voltage should exist.

NG → Check the following items.
1) Harness continuity between battery terminal and combination meter
2) Ignition relay
3) Fusible link and fuse
4) Ignition switch

OK ↓

B

CHECK ECM OUTPUT.
1) Start engine.
2) Check voltage between terminals ⑫ and ㉒ at idle and 2,000 rpm
Higher rpm = Higher voltage
Lower rpm = Lower voltage
Voltage should change with rpm.

NG → Check harness and connector between ECM and combination meter, or check ground.

OK ↓

Replace tachometer ↓

INSPECTION END

Inspection/Speedometer and Vehicle Speed Sensor

SYMPTOM: Speedometer stays at 0 km/h (0 MPH).

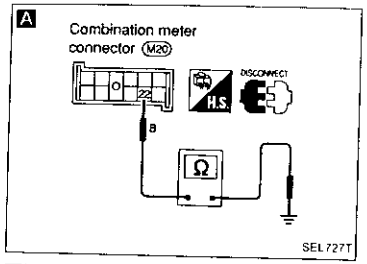

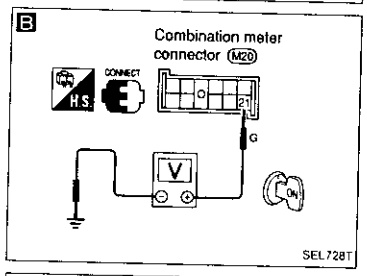

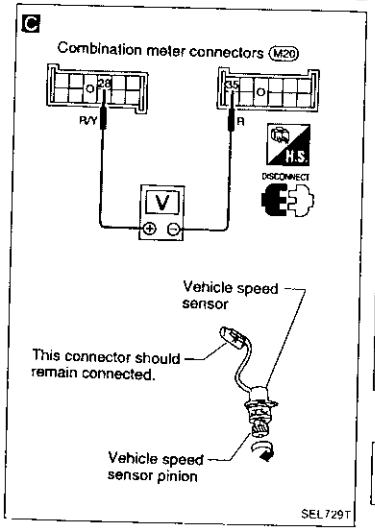

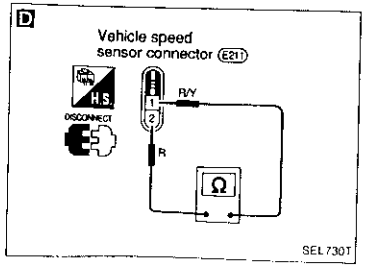

INSPECTION START

A CHECK GROUND CIRCUIT OF SPEEDOMETER.
Check continuity between terminal (22) and body ground.
Continuity should exist.
NG → Repair harness or connector.
OK ↓

B CHECK SPEEDOMETER CIRCUIT.
1) Turn ignition switch "ON".
2) Check voltage between terminal (21) and body ground.
Battery voltage should exist.
NG → Repair harness or connector.
OK ↓

C CHECK VEHICLE SPEED SENSOR OUTPUT.
1) Remove vehicle speed sensor from transaxle.
2) Check voltage between terminal (28) and (35) while quickly turning speed sensor pinion.
Voltage: Approx. 0.5V
OK → Replace speedometer.
NG ↓

D CHECK VEHICLE SPEED SENSOR.
Check resistance between terminals ① and ②.
Resistance: Approx. 250Ω.
NG → Replace vehicle speed sensor.
OK ↓

Repair harness or connector between speedometer and vehicle speed sensor.

INSPECTION END

Inspection/Speedometer and Vehicle Speed Sensor (Cont'd)

SYMPTOM: Speedometer indication flutters.

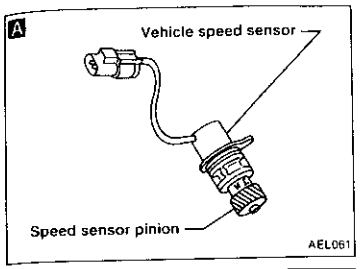

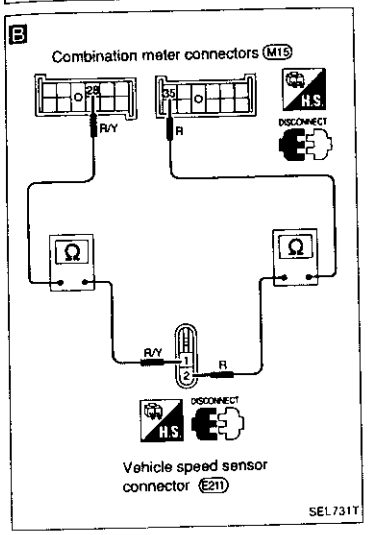

INSPECTION START

Is vehicle speed sensor installed properly? Check looseness and so on.
NG → Install vehicle speed sensor properly.
OK ↓

A Do you feel resistance when turning vehicle speed sensor pinion?
No → Replace vehicle speed sensor.
Yes ↓

B Check continuity between speedometer terminal (28) and vehicle speed sensor terminal ①, and between (35) and ②.
Continuity should exist.
NG → Repair harness and connector.
OK ↓

Replace speedometer.

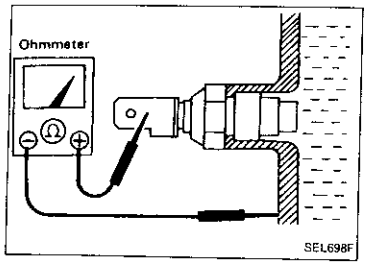

Thermal Transmitter Check

Check the resistance between the terminals of thermal transmitter and body ground.

Water temperature	Resistance
60°C (140°F)	Approx. 70 - 90Ω
100°C (212°F)	Approx. 21 - 24Ω

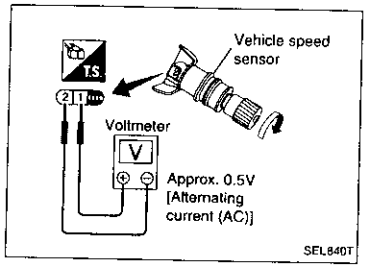

Vehicle Speed Sensor Signal Check

1. Remove vehicle speed sensor from transmission.
2. Turn vehicle speed sensor pinion quickly and measure voltage across ① and ②.

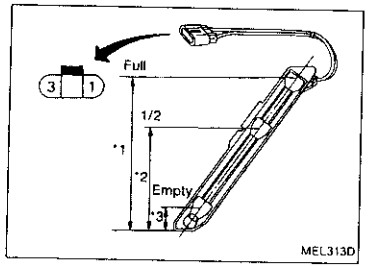

Fuel Tank Gauge Unit Check

Sending unit

- For removal, refer to FE section.

Check the resistance between terminals ① and ③.

Ohmmeter (+)	Ohmmeter (−)		Float position mm (in)		Resistance value (Ω)
①	③	*1	Full	358 (14.09)	Approx. 4 - 6
		*2	1/2	245 (9.65)	30 - 35
		*3	Empty	42 (1.65)	85 - 93

*1 and *3: When float is in contact with stopper.

Lead Switch

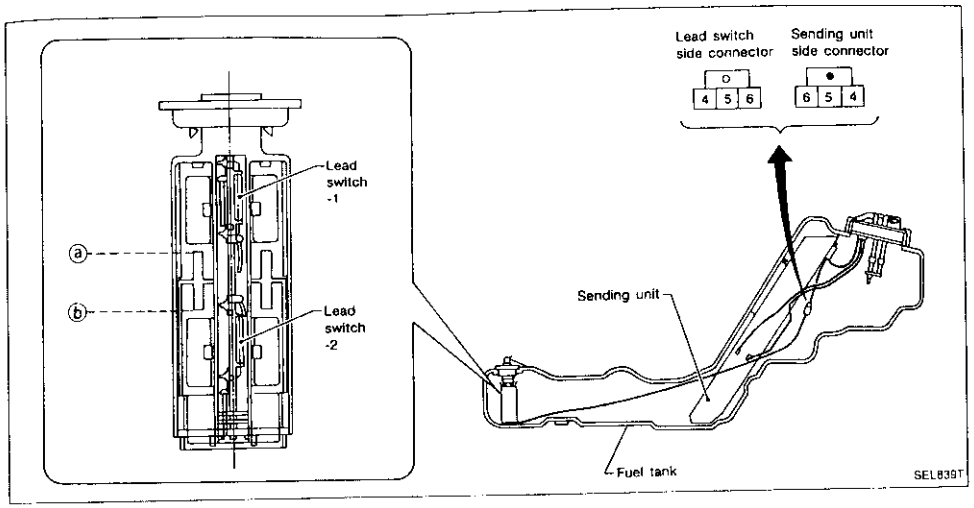

Lead switch is built into the fuel tank.

Check the continuity between terminals ④ and ⑤ or ④ and ⑥.

Terminals ④	⑤	⑥	Lead switch condition SW1	SW2	Fuel level line	Fuel capacity (Approximate values) ℓ (Imp qt)
○		○	ON	ON	Above ⓐ	More than 6.8 (6)
○	○		OFF	ON	ⓐ - ⓑ	2.5 - 6.8 (2-1/4 - 6)
			OFF	OFF	Below ⓑ	Less than 2.5 (2-1/4)

Warning Lamps/Schematic

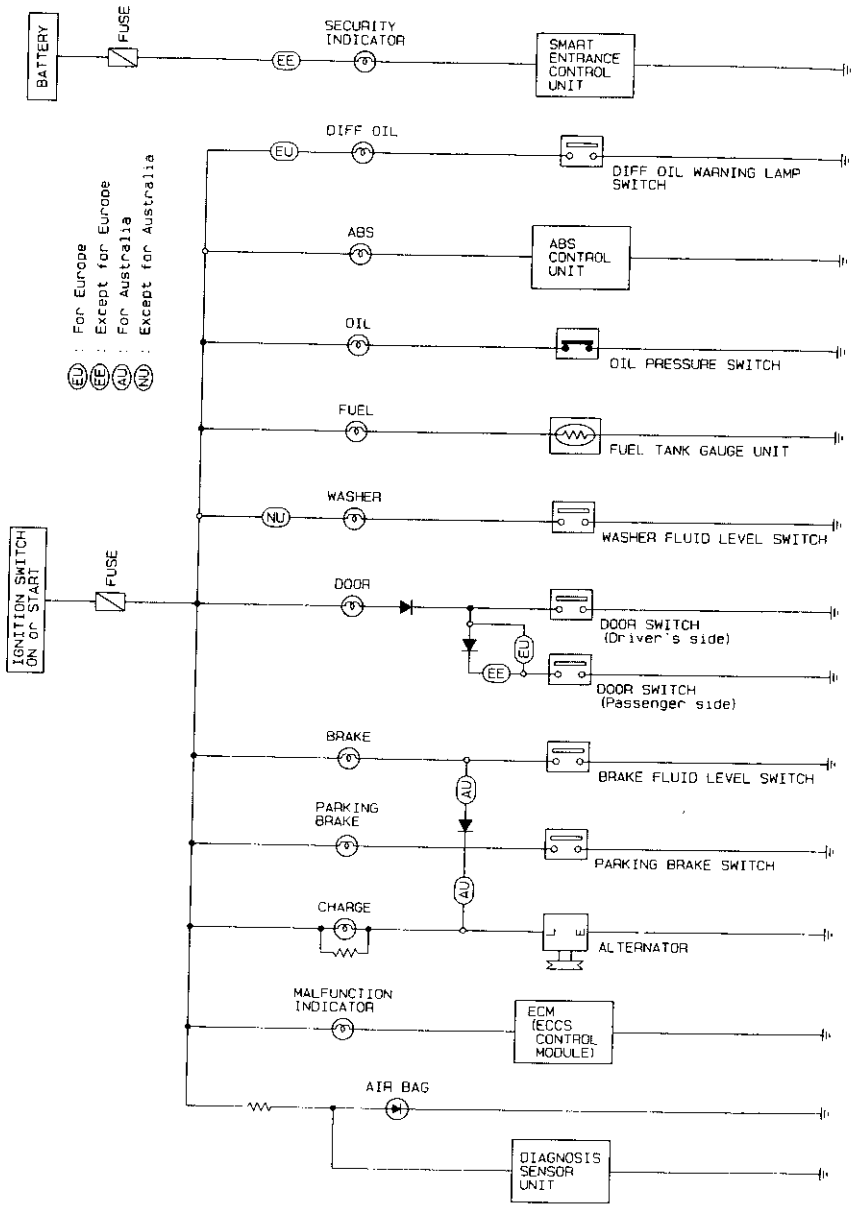

Warning Lamps/Wiring Diagram — WARN —

LHD MODELS

EL-WARN-01

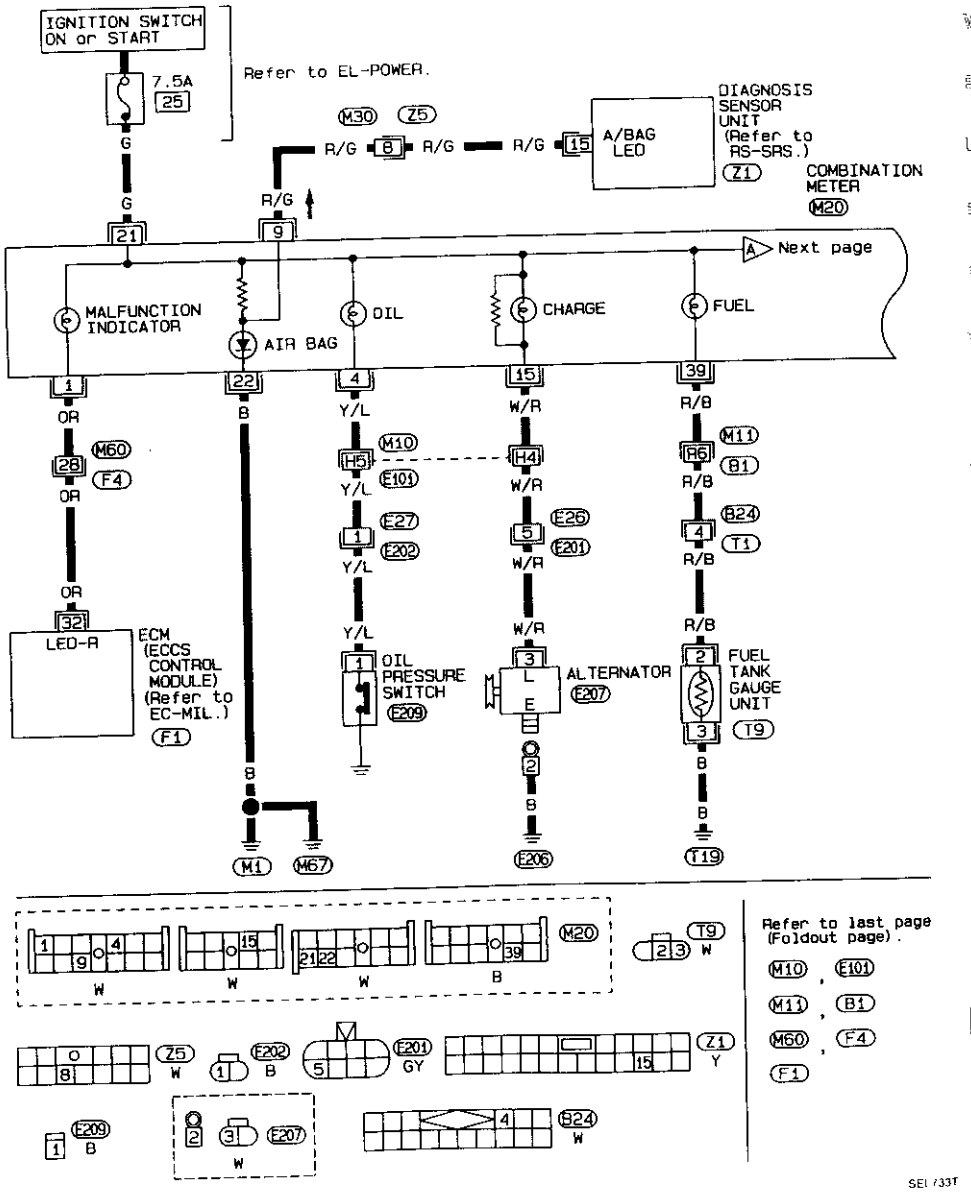

Warning Lamps/Wiring Diagram — WARN — (Cont'd)

EL-WARN-02

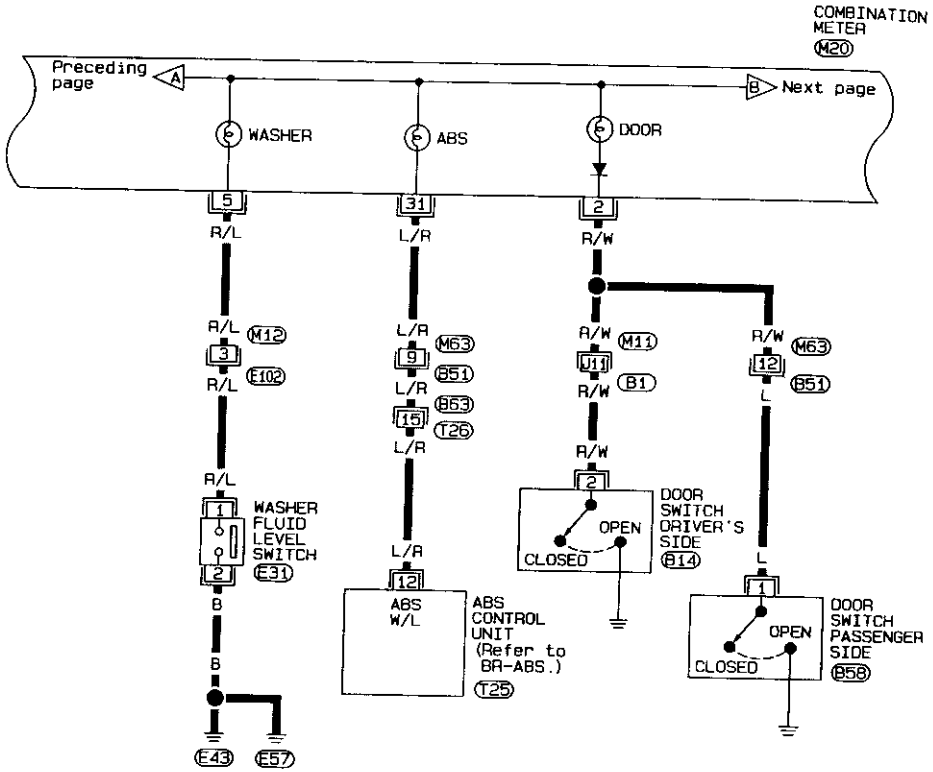

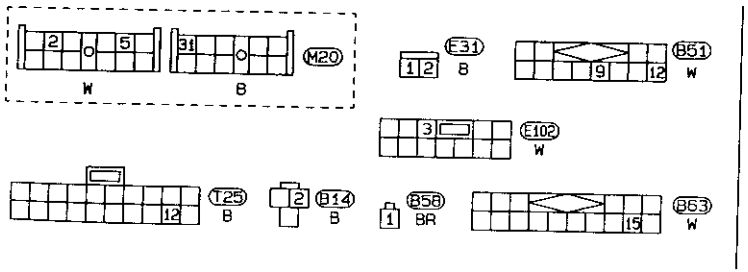

Refer to last page (Foldout page).

M11 , B1

SEL734T

Warning Lamps/Wiring Diagram — WARN — (Cont'd)

EL-WARN-03

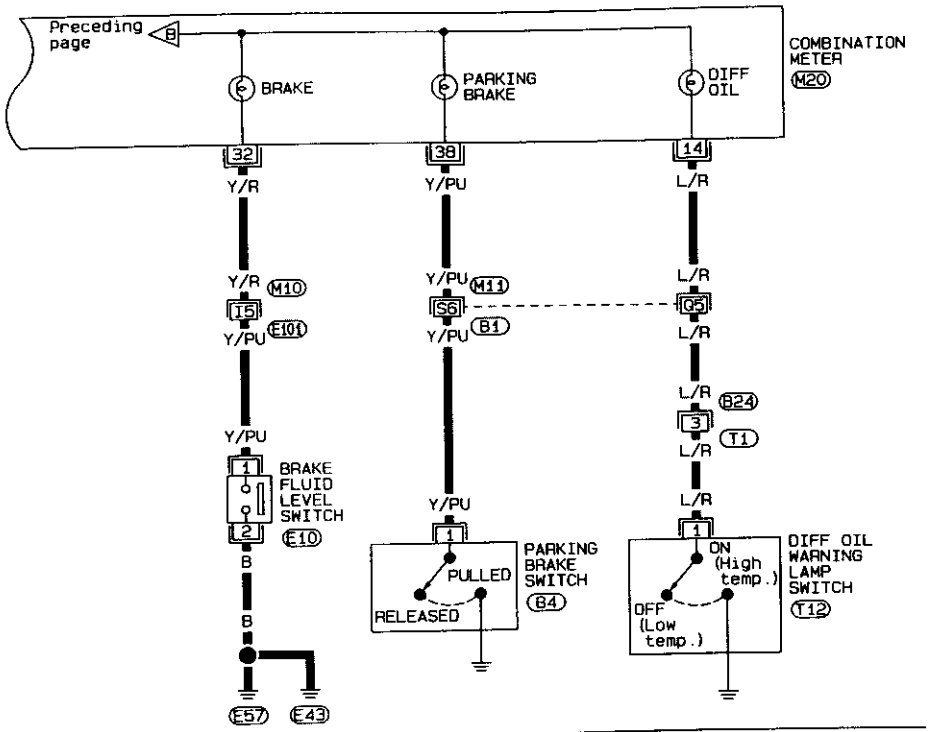

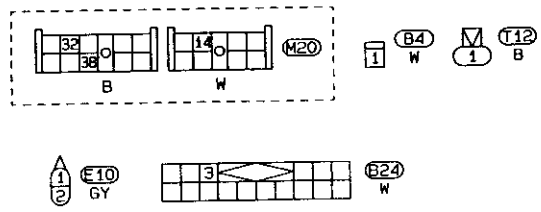

Refer to last page (Foldout page).

M10 , E101

M11 , B1

SEL735T

Warning Lamps/Wiring Diagram — WARN — (Cont'd)

RHD MODELS

EL-WARN-04

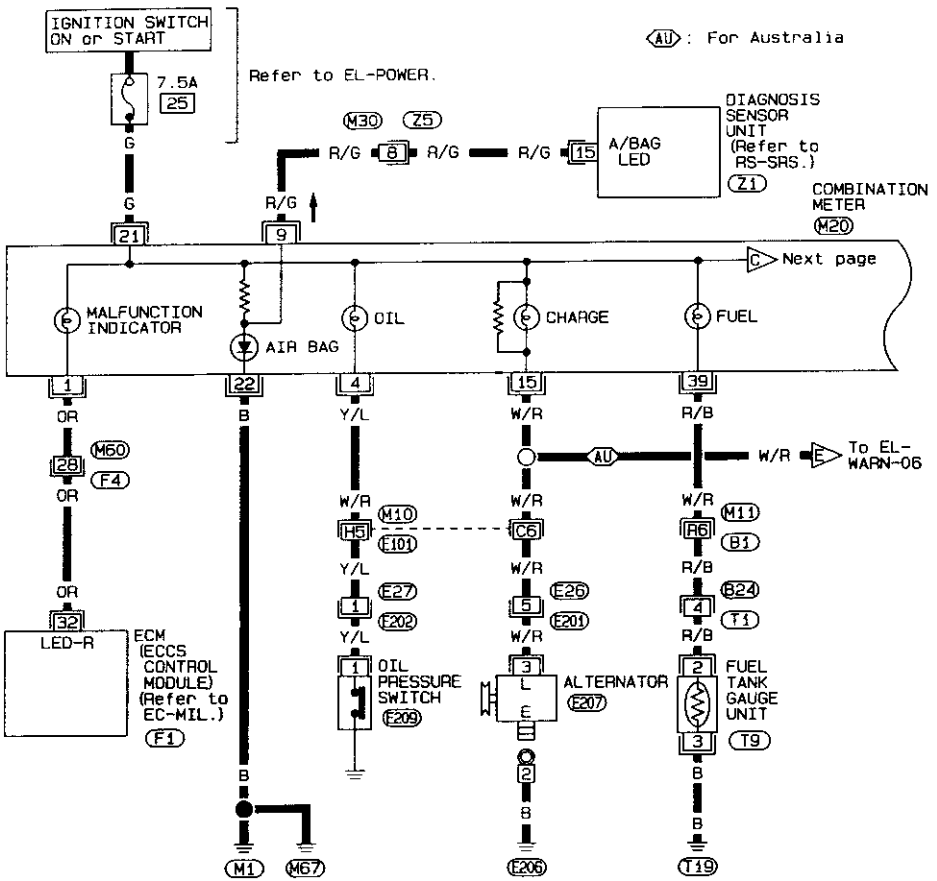

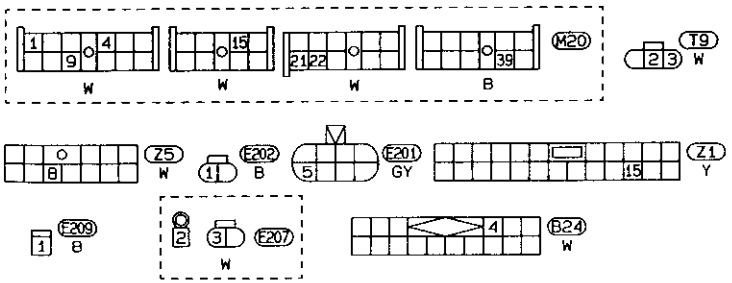

Refer to last page (Foldout page).
M10 , E101
M11 , B1
M60 , F4
F1

SEL736T

Warning Lamps/Wiring Diagram — WARN — (Cont'd)

EL-WARN-05

(NU) : Except for Australia
(EU) : For Europe
(EE) : Except for Europe
*1 ··· (EU) R/W , (EE) L/R
*2 ··· (EU) R/W , (EE) L

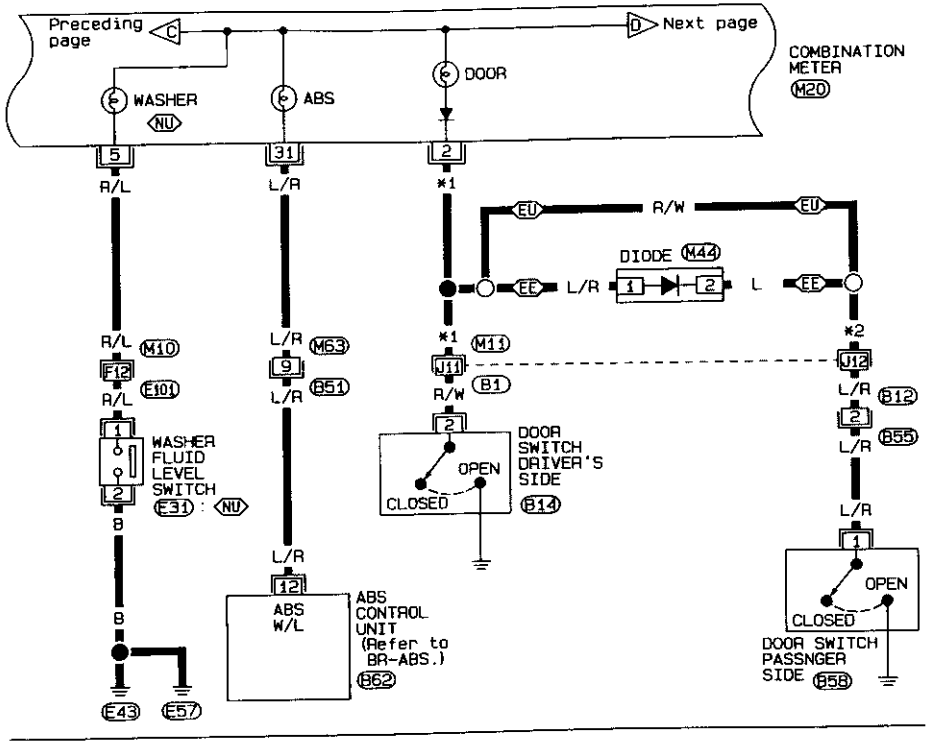

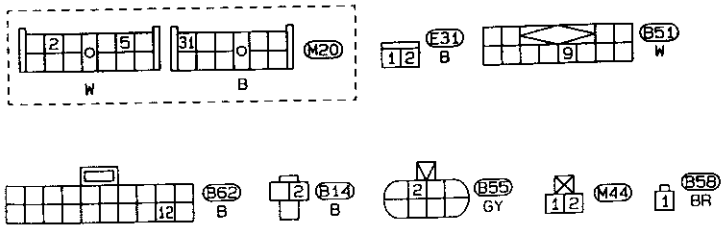

Refer to last page (Foldout page).
M10 , E101
M11 , B1

SEL737T

Warning Lamps/Wiring Diagram — WARN — (Cont'd)

EL-WARN-06

EU : For Europe
EE : Except for Europe
AU : For Australia

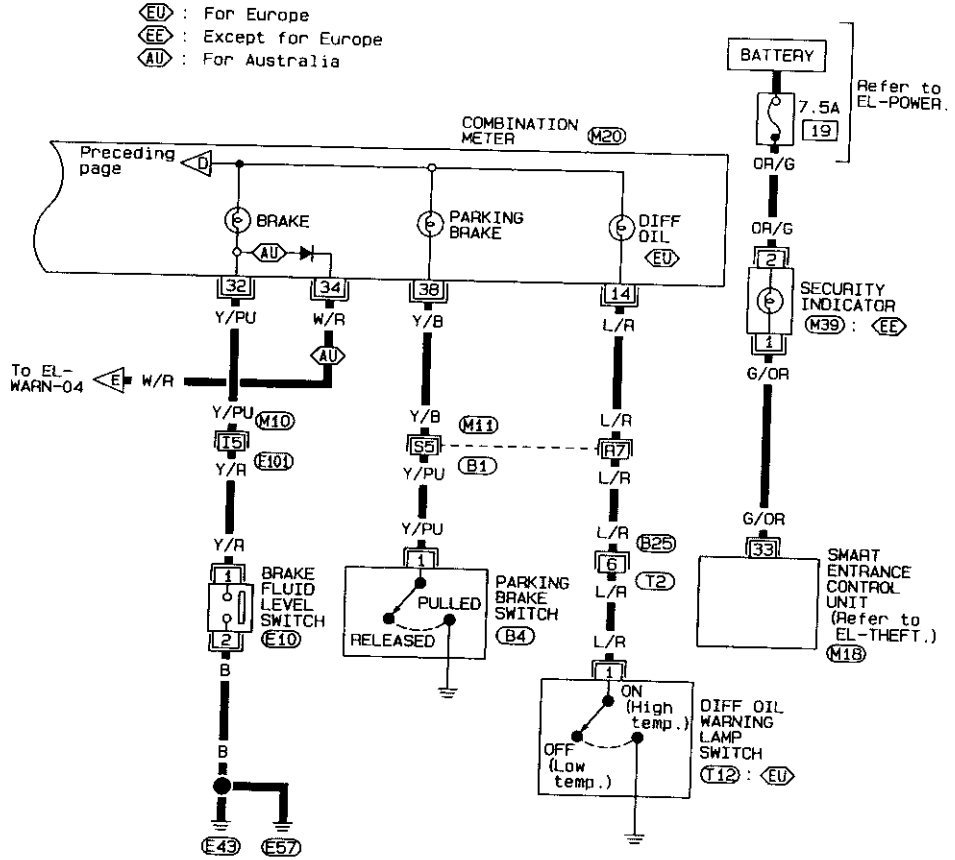

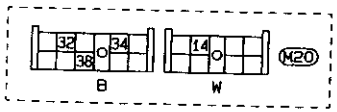

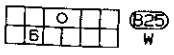

Refer to last page (Foldout page).
M10 , E101
M11 , B1
M18

SEL738T

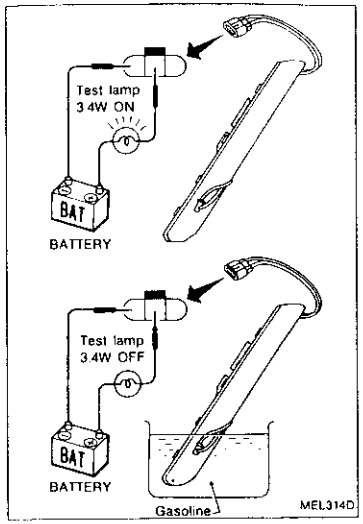

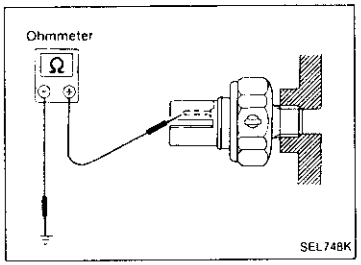

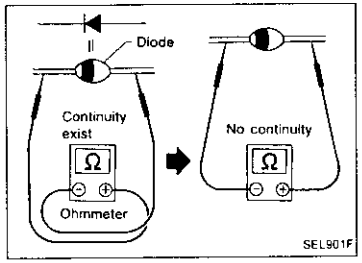

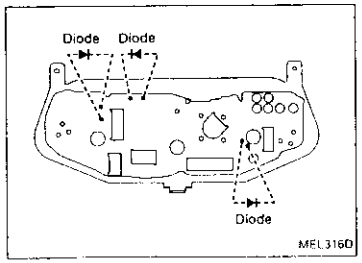

Fuel Warning Lamp Sensor Check

- It will take a short time for the bulb to light.

Oil Pressure Switch Check

	Oil pressure kPa (bar, kg/cm², psi)	Continuity
Engine start	More than 10 - 20 (0.10 - 0.20, 0.1 - 0.2, 1 - 3)	NO
Engine stop	Less than 10 - 20 (0.10 - 0.20, 0.1 - 0.2, 1 - 3)	YES

Check the continuity between the terminals of oil pressure switch and body ground.

Diode Check

- Check continuity using an ohmmeter.
- Diode is functioning properly if test results are as shown in the figure at left.

NOTE: Specification may vary depending on the type of tester. Before performing this inspection, be sure to refer to the instruction manual for the tester to be used.

- Diodes for warning lamps are built into the combination meter printed circuit.

Warning Buzzer/System Description

The warning buzzer is controlled by the smart entrance control unit.
Power is supplied at all times
- through 10A fuse (No. 21 , located in the fuse block)
- to warning buzzer terminal ③
- to key switch terminal ①.

Power is supplied at all times
(LHD models without daytime light system)
- through 45A fusible link (letter i , located in the fusible link and fuse box).
- to lighting switch terminal ⑪.

(LHD models with daytime light system and RHD models)
- through 10A fuse (No. 23 , located in the fuse block)
- to lighting switch terminal ⑪ (For Europe) or ⑫ (Except for Europe)

Power is supplied at all times
- through 25A fusible link (letter f , located in the fusible link and fuse box)
- to circuit breaker terminal ①
- through circuit breaker terminal ②
- to smart entrance control unit terminal ①.

With the ignition switch in the ON or START position, power is supplied
- through 7.5A fuse (No. 26 , located in the fuse block)
- to smart entrance control unit terminal ⑪.

Ground is supplied to smart entrance control unit terminal ⑩ through body ground (M1).
When a signal, or combination of signals, is received by the smart entrance control unit, ground is supplied
- through smart entrance control unit terminal ㉓
- to warning buzzer terminal ①.

With power and ground supplied, the warning buzzer will sound.

Ignition key warning buzzer (Except for Europe models)

With the key in the ignition switch in the OFF position, and the driver's door open, the warning buzzer will sound. A battery positive voltage is supplied
- from key switch terminal ②
- to smart entrance control unit terminal ㉔.

Ground is supplied
- from driver side door switch terminal ①
- to smart entrance control unit terminal ⑮.

Driver side door switch terminal ③ is grounded through body grounds (B2) and (B18).

Light warning buzzer

With ignition switch OFF, driver's door open, and lighting switch in 1ST or 2ND position, warning buzzer will sound. A battery positive voltage is supplied
(LHD models without daytime light system)
- from lighting switch terminal ⑫
- through 10A fuse (No. 14 , located in the fuse block)
- to smart entrance control unit terminal ㉕.

(LHD models with daytime light system)
- from lighting switch terminal ⑫
- to daytime light unit terminal ⑪
- through daytime light unit terminal ⑩
- to smart entrance control unit terminal ㉕.

(RHD models)
- from lighting switch terminal ⑫ (For Europe) or ⑪ (Except for Europe)
- to smart entrance control unit terminal ㉕.

Ground is supplied
- from driver side door switch terminal ①
- to smart entrance control unit terminal ⑮.

Driver side door switch terminal ③ is grounded through body grounds (B2) and (B18).

Warning Buzzer/Wiring Diagram — CHIME —

EL-CHIME-01

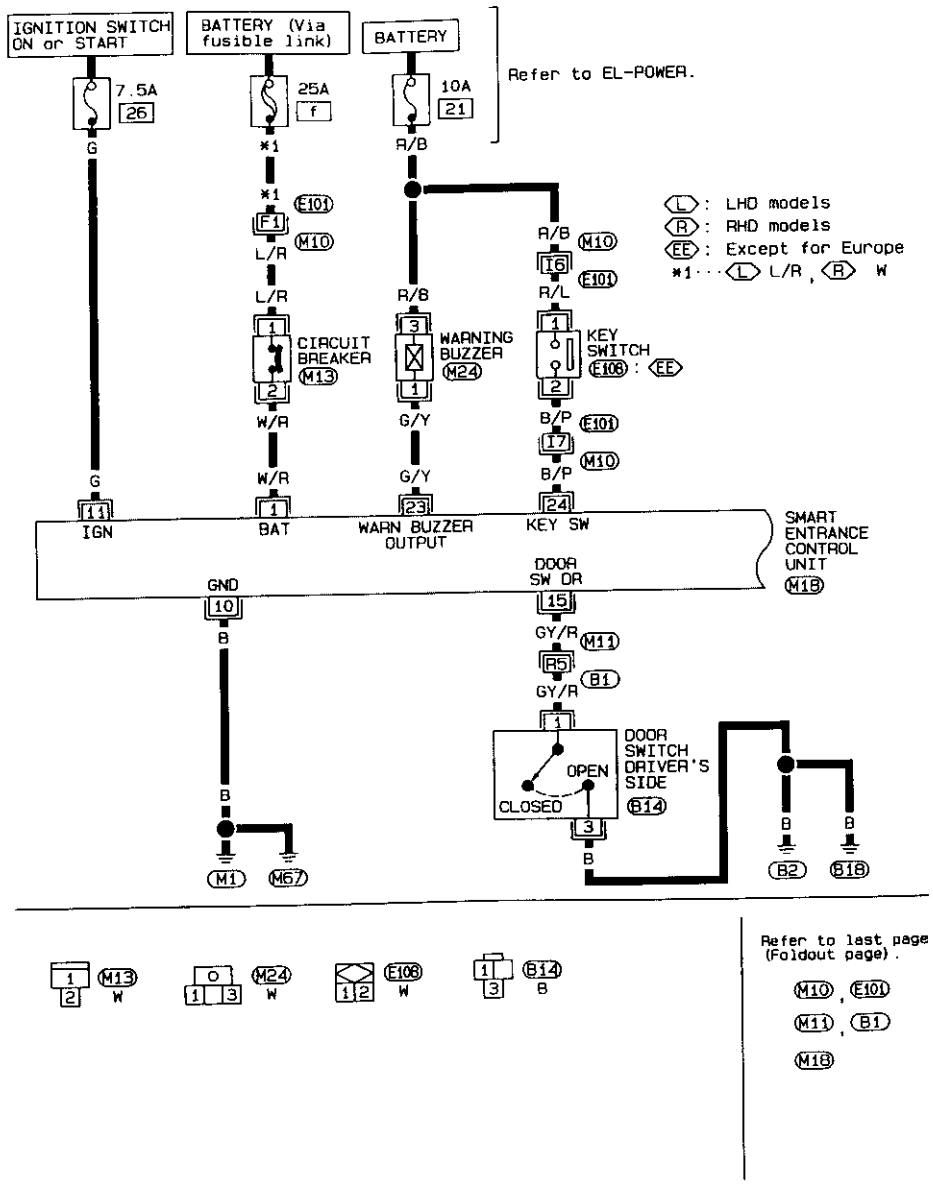

SEL739T

Warning Buzzer/Wiring Diagram — CHIME — (Cont'd)

EL-CHIME-02

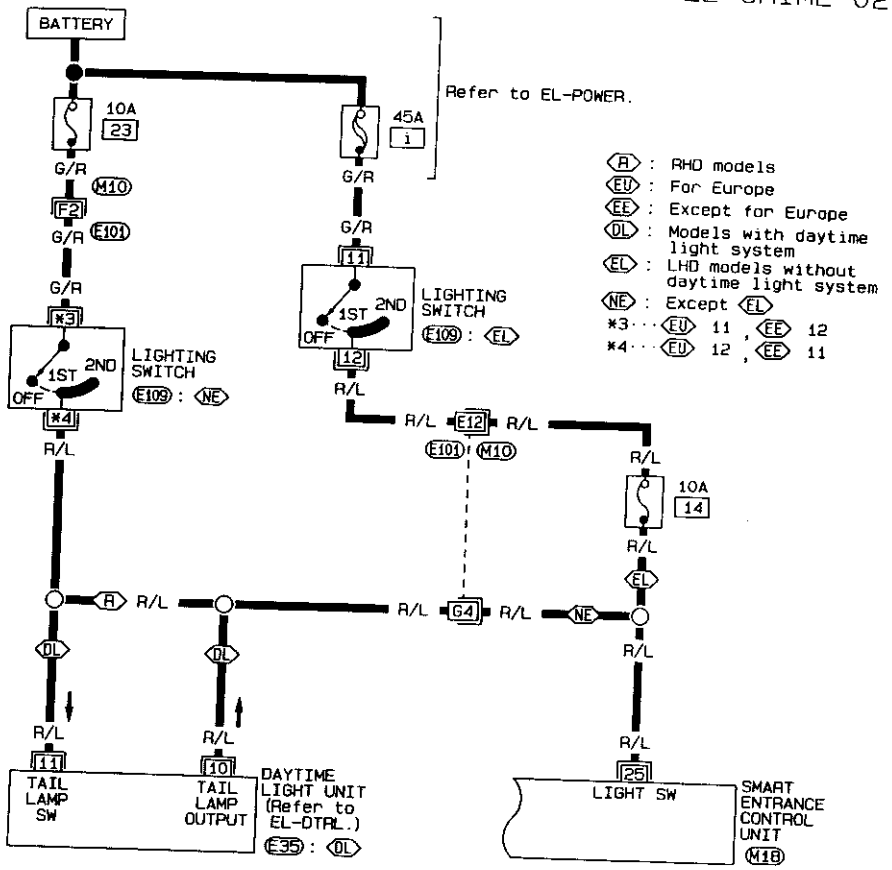

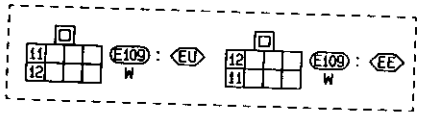

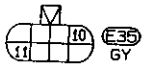

Refer to last page (Foldout page).

M10 , E101

M18

SEL740T

Trouble Diagnoses — Warning Buzzer

SYMPTOM CHART

PROCEDURE	Preliminary Check		Main Power Supply and Ground Circuit Check	Diagnostic Procedure	
REFERENCE PAGE	EL-133	EL-133	EL-134	EL-135	EL-136
SYMPTOM	Preliminary check 1	Preliminary check 2	Main power supply and Ground circuit	Diagnostic Procedure 1	Diagnostic Procedure 2
Light warning buzzer does not activate.	○			○	
Ignition key warning buzzer does not activate. (Except for Europe model)		○	○		○

PRELIMINARY CHECK

Preliminary check 1

- **Light warning buzzer does not activate.**

Does ignition key warning buzzer activate? — Yes → Go to "DIAGNOSTIC PROCEDURE 1 — Step 1" (EL-135)

↓ No

Does interior lamp come on when door is open? — Yes → Go to "DIAGNOSTIC PROCEDURE 1 — Step 2" (EL-135).

↓ No

Go to "DIAGNOSTIC PROCEDURE 1 — Step 3" (EL-135).

Preliminary check 2

- **Ignition key warning buzzer does not activate.**

Does light warning buzzer activate? — Yes → Go to "DIAGNOSTIC PROCEDURE 2 — Step 1" (EL-136).

↓ No

Does interior lamp come on when door is open? — Yes → Go to "DIAGNOSTIC PROCEDURE 2 — Step 2" (EL-136).

↓ No

Go to "DIAGNOSTIC PROCEDURE 2 — Step 3" (EL-136).

Trouble Diagnoses — Warning Buzzer (Cont'd)

MAIN POWER SUPPLY AND GROUND CIRCUIT CHECK

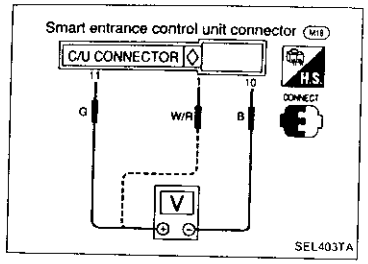

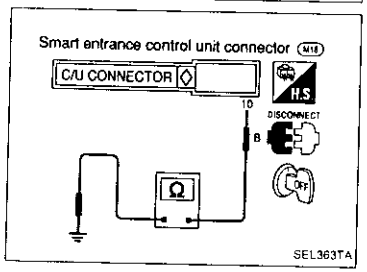

Main power supply

Terminals	Battery voltage existence condition		
	Ignition switch position		
	OFF	ACC	ON
⑪ - ⑩	No	No	Yes
① - ⑩	Yes	Yes	Yes

Ground circuit

Terminals	Continuity
⑩ - Ground	Yes

Trouble Diagnoses — Warning Buzzer (Cont'd)

DIAGNOSTIC PROCEDURE 1

SYMPTOM: Light warning buzzer does not activate.

- Perform "Preliminary check 1" before referring to the following flow chart.

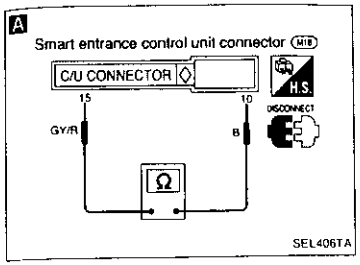

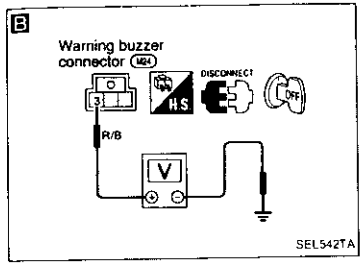

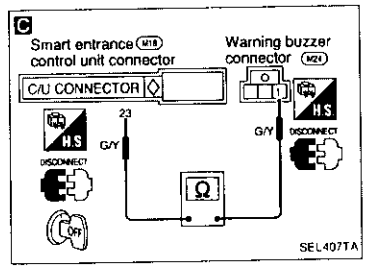

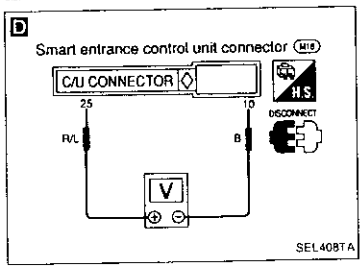

A Step 3

DOOR SWITCH INPUT SIGNAL CHECK
Check continuity between control unit harness terminals ⑮ and ⑩.

Condition of driver's door	Continuity
Driver side door is closed.	No
Driver side door is open.	Yes

NG →
- Check door switch (Refer to EL-246.)
- Check harness continuity between control unit harness terminal ⑮ and driver side door switch harness terminal ①.
  Continuity should exist.
- Check harness continuity between driver side door switch harness terminal ③ and body ground.
  Continuity should exist.

OK ↓

B Step 2

BUZZER POWER SUPPLY CHECK
Measure voltage between warning buzzer harness terminal ③ and body ground.
Battery voltage should exist.

NG → Check 10A fuse [21], harness and connector

OK ↓

C

BUZZER OUTPUT SIGNAL CHECK
Check continuity between warning buzzer harness terminal ① and control unit harness terminal ㉓.
Continuity should exist.

NG → Repair harness or connectors.

OK ↓

WARNING BUZZER CHECK
Refer to EL-137.

NG → Replace warning buzzer.

OK ↓

D Step 1

LIGHTING SWITCH INPUT SIGNAL CHECK
Measure voltage between control unit harness terminals ㉕ and ⑩.

Condition	Voltage [V]
Lighting switch is ON.	Approx. 12
Lighting switch is OFF.	0

NG →
- Check lighting switch
- Check harness continuity between control unit harness terminal ㉕ and lighting switch harness terminal ⑫.
  Continuity should exist.
- Measure voltage between lighting switch harness terminal ⑪ and body ground
  Battery voltage should exist.

OK ↓

Replace control unit.

Trouble Diagnoses — Warning Buzzer (Cont'd)

DIAGNOSTIC PROCEDURE 2

SYMPTOM: Ignition key warning buzzer does not activate. (Except Europe model)

- Perform "Preliminary check 2" before referring to the following flow chart.

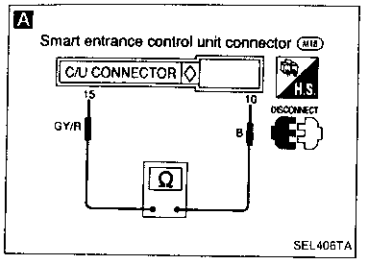

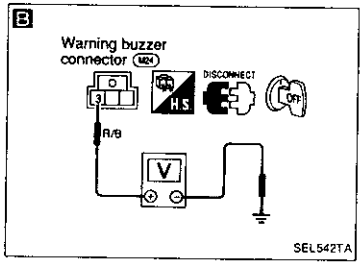

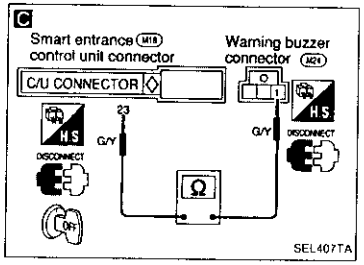

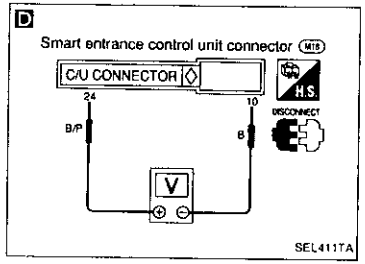

A Step 3

DOOR SWITCH INPUT SIGNAL CHECK
Check continuity between control unit harness terminals ⑮ and ⑩.

Condition of driver's door	Continuity
Driver side door is closed.	No
Driver side door is open.	Yes

NG →
- Check door switch. (Refer to EL-246.)
- Check harness continuity between control unit harness terminal ⑮ and driver side door switch harness terminal ①.
  Continuity should exist.
- Check harness continuity between driver side door switch harness terminal ③ and body ground.
  Continuity should exist.

OK ↓

B Step 2

BUZZER POWER SUPPLY CHECK
Measure voltage between warning buzzer harness terminal ③ and body ground.
Battery voltage should exist.

NG → Check 10A fuse [21], harness and connector.

OK ↓

C

BUZZER OUTPUT SIGNAL CHECK
Check continuity between warning buzzer harness terminal ① and control unit harness terminal ㉓.
Continuity should exist.

NG → Repair harness or connectors.

OK ↓

WARNING BUZZER CHECK
Refer to EL-137.

NG → Replace warning buzzer.

OK ↓

D Step 1

IGNITION KEY SWITCH INPUT SIGNAL CHECK
Measure voltage between control unit harness terminals ㉔ and ⑩.

Condition	Voltage [V]
Key is inserted.	Approx. 12
Key is pulled.	0

NG →
- Check ignition key switch.
- Check harness continuity between control unit harness terminal ㉔ and key switch harness terminal ②.
  Continuity should exist.
- Measure voltage between key switch harness terminal ① and body ground.
  Battery voltage should exist.

OK ↓

Replace control unit.

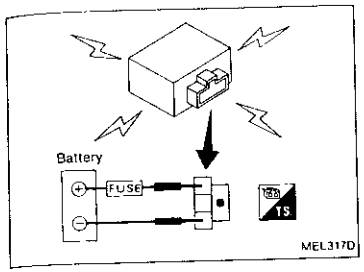

Warning Buzzer Check

Supply battery voltage to warning buzzer as shown in the illustration.
Warning buzzer should operate.

Front Wiper and Washer/System Description

WIPER OPERATION

The wiper switch is controlled by a lever built into the combination switch.
There are three wiper switch positions:

- LO speed
- HI speed
- INT (Intermittent)

With the ignition switch in the ACC or ON position, power is supplied

- through 20A fuse (No. 11 , located in the fuse block)
- to front wiper motor terminal ②.

Low and high speed wiper operation

Ground is supplied to wiper switch terminal ⑰ through body ground E43 or E57.
When the wiper switch is placed in the LO position, ground is supplied

- through terminal ⑭ of the wiper switch
- to wiper motor terminal ④.

With power and ground supplied, the wiper motor operates at low speed.
When the wiper switch is placed in the HI position, ground is supplied

- through terminal ⑯ of the wiper switch
- to wiper motor terminal ⑤.

With power and ground supplied, the wiper motor operates at high speed.

Auto stop operation

With wiper switch turned OFF, wiper motor will continue to operate until wiper arms reach windshield base.
When wiper arms are not located at base of windshield with wiper switch OFF, ground is provided

- from terminal ⑭ of the wiper switch
- to wiper motor terminal ④, in order to continue wiper motor operation at low speed.

Ground is also supplied

- through terminal ⑬ of the wiper switch
- to wiper amplifier terminal ②
- through terminal ⑦ of the wiper amplifier
- to wiper motor terminal ①
- through terminal ⑥ of the wiper motor, and
- through body ground F37.

When wiper arms reach base of windshield, wiper motor terminals ① and ② are connected instead of terminals ① and ⑥. Wiper motor will then stop wiper arms at the PARK position.

Intermittent operation

The wiper motor operates the wiper arms one time at low speed at a set interval of approximately 3 to 13 seconds. This feature is controlled by the wiper amplifier.
When the wiper switch is placed in the INT position, ground is supplied

- to wiper amplifier terminal ①
- from wiper switch terminal ⑮
- through wiper switch terminal ⑰ and body ground E43 or E57.
- to wiper motor terminal ④
- through the wiper switch terminal ⑭
- to wiper switch terminal ⑬
- through wiper amplifier terminal ②
- to wiper amplifier terminal ③
- through body ground F37.

The desired interval time is input

- to wiper amplifier terminal ⑧
- from wiper switch terminal ⑲.

The wiper motor operates at low speed at the desired time interval.

Front Wiper and Washer/System Description (Cont'd)

WASHER OPERATION

With the ignition switch in the ACC or ON position, power is supplied

- through 20A fuse (No. 11 , located in the fuse block)
- to washer motor terminal ①.

When the lever is pulled to the WASH position, ground is supplied

- to washer motor terminal ②, and
- to wiper amplifier terminal ⑥
- from terminal ⑱ of the wiper switch
- through terminal ⑰ of the wiper switch, and
- through body ground E43 or E57.

With power and ground supplied, the washer motor operates.
The wiper motor operates when the lever is pulled to the WASH position for one second or more and for approximately 3 seconds after the lever is released. This feature is controlled by the wiper amplifier in the same manner as the intermittent operation.

Front Wiper and Washer/Wiring Diagram — WIPER —

EL-WIPER-01

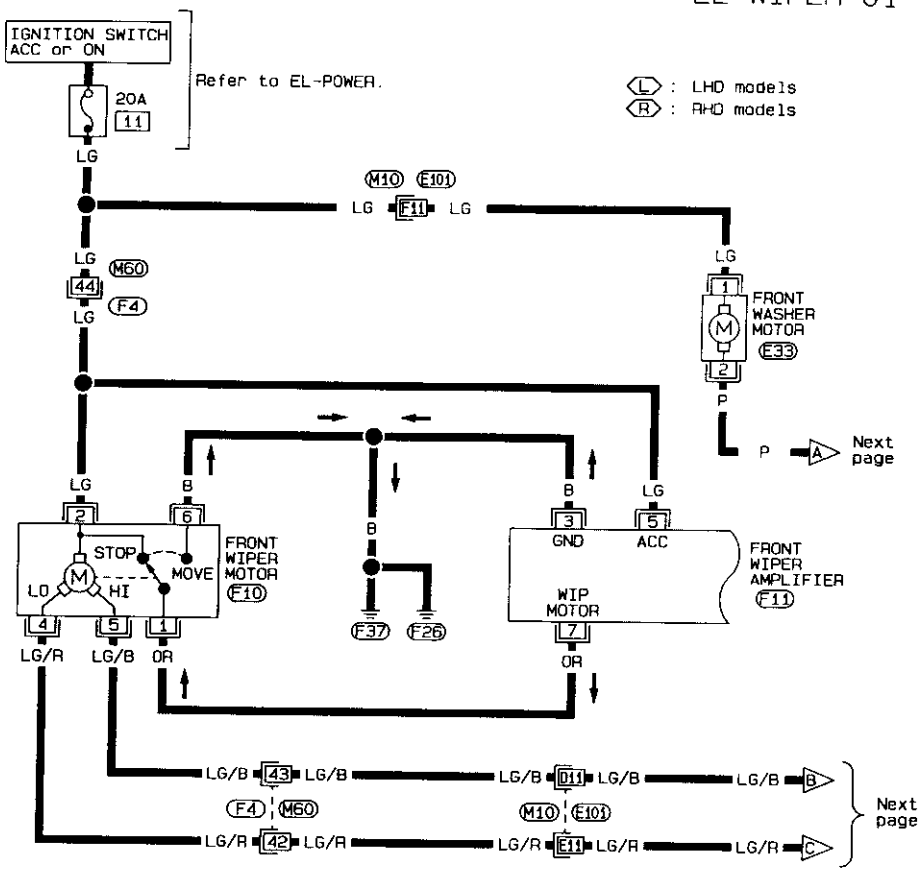

(L): F10 GY (R): F10 W

F33 W

F11 (L) GY, (R) W

Refer to last page (Foldout page).

M10, E101

M60, F4

SEL741T

Front Wiper and Washer/Wiring Diagram — WIPER — (Cont'd)

EL-WIPER-02

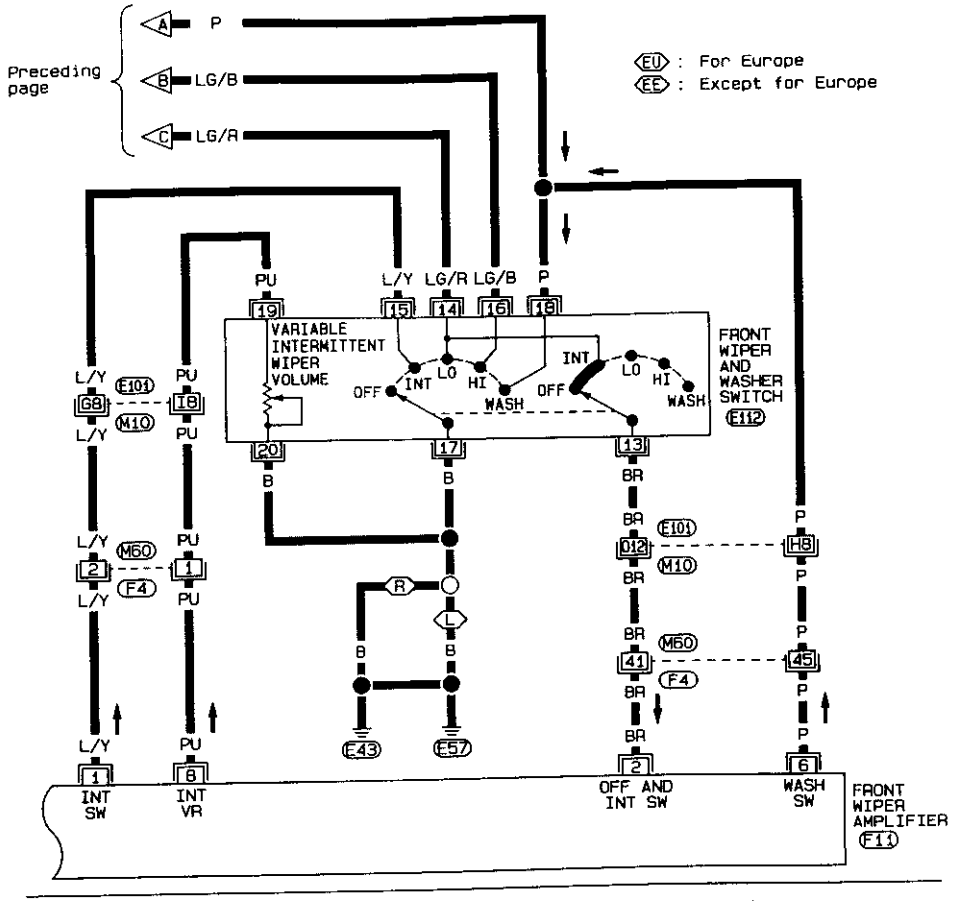

F11 (L) GY, (R) W

EU: E112 L

EE: E112 L

Refer to last page (Foldout page).

M10, E101

M60, F4

SEL742T

Trouble Diagnoses

DIAGNOSTIC PROCEDURE 1

SYMPTOM: Intermittent wiper does not operate.

A

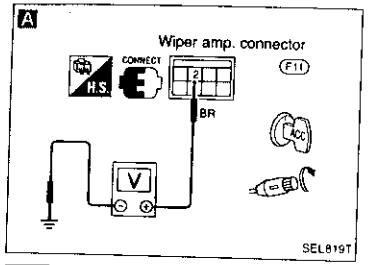

WIPER AMP. OUTPUT SIGNAL CHECK
1) Turn ignition switch to "ACC".
2) Turn wiper switch to "INT" or "OFF".
3) Measure voltage between wiper amp. harness terminal ② and body ground.

Condition of wiper switch	Voltage [V]
OFF	Approx. 12
INT	Pointer swings from 0 to 12 every 3 to 13 seconds

OK → Check wiper motor.

NG ↓

B

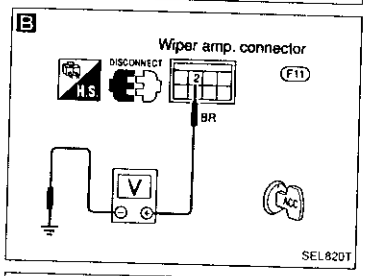

Measure voltage between wiper amp. harness terminal ② and body ground.
Battery voltage should exist.

NG →
- Check wiper switch.
- Check wiper motor.
- Check harness continuity between wiper amp. harness terminal ② and wiper switch harness terminal ⑬.
  Continuity should exist.
- Check harness continuity between wiper switch harness terminal ⑭ and wiper motor harness terminal ④.
  Continuity should exist.

OK ↓

C

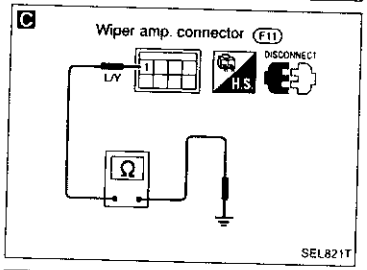

INTERMITTENT SWITCH INPUT SIGNAL CHECK
Check harness continuity between wiper amp. harness terminal ① and body ground.

Condition of wiper switch	Continuity
OFF	No
INT	Yes

NG →
- Check wiper switch.
- Check harness continuity between wiper amp. harness terminal ① and wiper switch harness terminal ⑮.
  Continuity should exist.
- Check harness continuity between wiper switch harness terminal ⑰ and body ground.
  Continuity should exist.

OK ↓

D

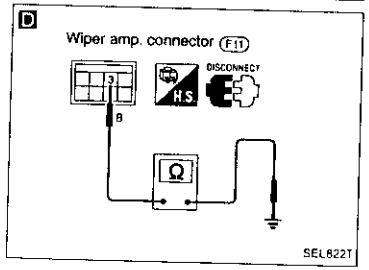

WIPER AMP. GROUND CIRCUIT CHECK
Check harness continuity between wiper amp. harness terminal ③ and body ground
Continuity should exist.

NG → Repair harness or connector

OK ↓

Replace wiper amp.

Trouble Diagnoses (Cont'd)

A

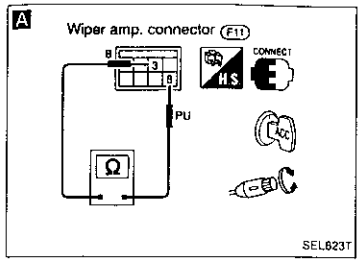

DIAGNOSTIC PROCEDURE 2

SYMPTOM: Intermittent time of wiper cannot be adjusted.

A

INTERMITTENT WIPER VOLUME INPUT SIGNAL CHECK
Measure resistance between wiper amp. harness terminals ⑧ and ③ while turning intermittent wiper volume.

Position of wiper knob	Resistance [Ω]
S	0
L	Approx. 1 k

OK → Replace wiper amp.

NG ↓

Check intermittent wiper volume.
Check harness continuity between wiper amp. harness terminal ⑧ and wiper switch harness terminal ⑲.
Check harness continuity between wiper switch harness terminal ⑳ and body ground.

A

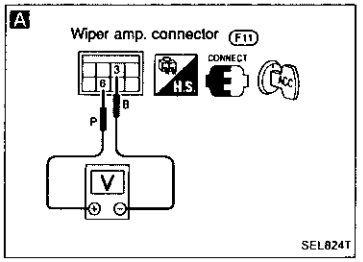

B

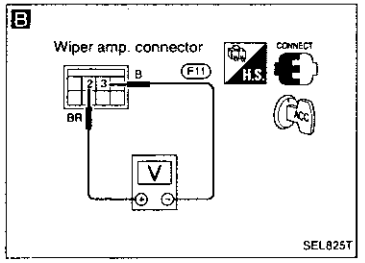

DIAGNOSTIC PROCEDURE 3

SYMPTOM: Wiper and washer activate individually but not in combination.

A

WASHER SWITCH INPUT SIGNAL CHECK
1) Turn ignition switch to "ACC".
2) Measure voltage between wiper amp. harness terminals ⑤ and ③.

Condition of washer switch	Voltage [V]
OFF	Approx. 12
ON	0

NG → Check harness continuity between wiper amp. harness terminal ⑤ and wiper switch harness terminal ⑱

OK ↓

B

WIPER AMP. OUTPUT SIGNAL CHECK
Measure voltage between wiper amp. harness terminals ② and ③ after operating washer switch.
0V for approx. 3 seconds after washer has operated.

NG → Check wiper switch.

OK ↓

Replace wiper amp.

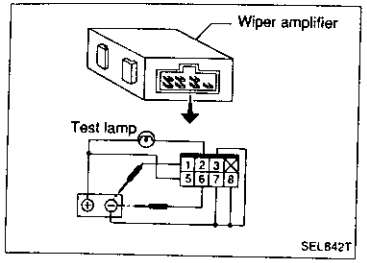

Front Wiper Amplifier Check

1. Connect as shown in the figure at left.
2. If test lamp comes on when connected to terminal ① or ⑥ and battery ground, wiper amplifier is normal.

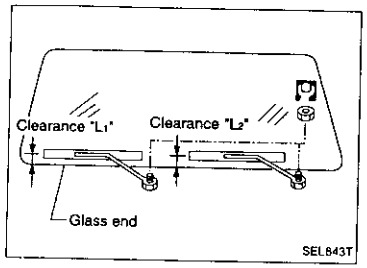

Front Wiper Installation and Adjustment

1. Prior to wiper arm installation, turn on wiper switch to operate wiper motor and then turn it "OFF" (Auto Stop).
2. Lift the blade up and then set it down onto glass surface to set the blade center to clearance "L_1" & "L_2" immediately before tightening nut.
3. Eject washer fluid. Turn on wiper switch to operate wiper motor and then turn it "OFF".
4. Ensure that wiper blades stop within clearance "L_1" & "L_2".

Clearance "L_1": 18 - 33 mm (0.71 - 1.30 in)
Clearance "L_2": 17 - 32 mm (0.67 - 1.26 in)

- Tighten wiper arm nuts to specified torque.

Front wiper:
16.7 - 22.6 N·m (1.70 - 2.31 kg-m, 12.32 - 16.67 ft-lb)

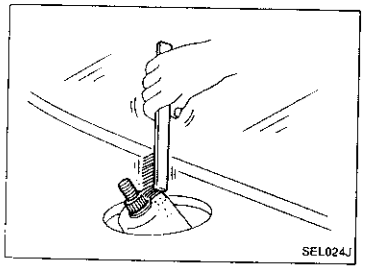

- **Before reinstalling wiper arm, clean up the pivot area as illustrated. This will reduce possibility of wiper arm looseness.**

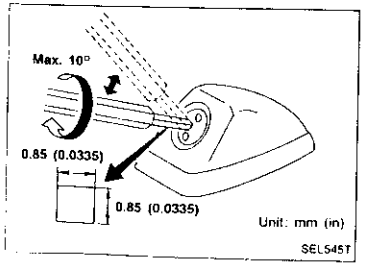

Front Washer Nozzle Adjustment

- Using a suitable tool, adjust windshield washer nozzle to correct its spray pattern.

Adjustable range: ±10° (in any direction)

Before attempting to turn the nozzle, gently tap the end of the tool to free the nozzle.
This will prevent "rounding out" the small female square in the center of the nozzle.

Front Washer Nozzle Adjustment (Cont'd)

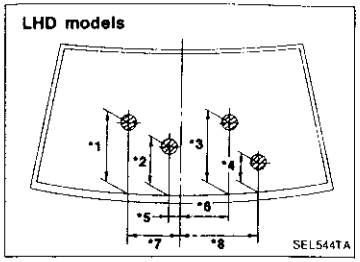

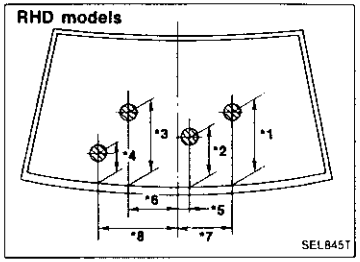

Unit: mm (in)

*1	358 (14.09)	*5	70 (2.76)
*2	245 (9.65)	*6	245 (9.65)
*3	300 (11.81)	*7	378 (14.88)
*4	203 (7.99)	*8	503 (19.80)

*: The diameters of these circles are less than 80 mm (3.15 in).

Front Washer Tube Layout

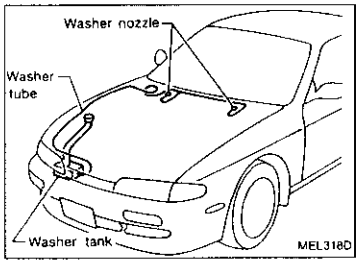

Front Wiper Linkage

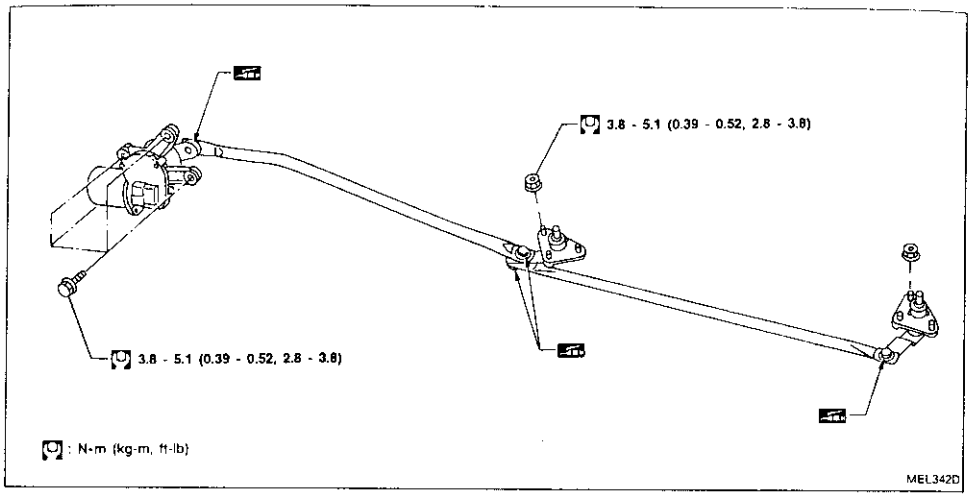

This illustration is for LHD models. For RHD models, these units are installed on the opposite side.

REMOVAL

1. Remove 4 bolts that secure wiper motor.
2. Detach wiper motor from wiper linkage at ball joint.
3. Remove wiper linkage.

Be careful not to break ball joint rubber boot.

INSTALLATION

- Grease ball joint portion before installation.

1. Installation is the reverse order of removal.

Rear Wiper and Washer/System Description

WIPER OPERATION

The rear wiper switch is controlled by a ring built into the combination switch.
There are two wiper switch positions:

- ON (LO speed)
- INT (Intermittent)

With the ignition switch in the ACC or ON position, power is supplied

- through 10A (LHD models) or 15A (RHD models) fuse (No. 16 (LHD models) or 14 (RHD models), located in the fuse block)
- to rear wiper motor terminal ④, and
- to rear wiper relay terminal ①.

Low speed wiper operation

Ground is supplied to rear wiper switch terminal ㉔ through body ground (E43) or (E57).
When the rear wiper is placed in the ON position, ground is supplied

- through rear wiper switch terminal ㉒
- to rear wiper relay terminal ②.

The rear wiper relay is energized and ground is supplied

- to rear wiper motor terminal ①
- through rear wiper relay terminal ③
- to rear wiper relay terminal ⑤
- through body ground (T19).

Auto stop operation

With the rear wiper switch turned OFF, rear wiper motor will continue to operate until wiper arm reaches rear window base.
When wiper arm is not located at base of rear window with rear wiper switch OFF, rear wiper relay is not energized and ground is supplied

- to rear wiper motor terminal ①
- through rear wiper relay terminal ③
- to rear wiper relay terminal ④
- through rear wiper motor terminal ③, in order to continue rear wiper motor operation at low speed.

Ground is also supplied

- to rear wiper motor terminal ②
- through body ground (B2) or (B18).

When wiper arm reaches base of rear window, rear wiper motor terminals ① and ④ are connected instead of terminals ① and ③. Rear wiper motor will then stop wiper arm at the PARK position.

Intermittent operation

The rear wiper motor operates the wiper arm one time at low speed at an interval of approximately 7 seconds. This feature is controlled by rear wiper amplifier.
With the ignition switch in the ACC or ON position, power is supplied

- through 10A (LHD models) or 15A (RHD models) fuse (No. 16 (LHD models) or 14 (RHD models), located in the fuse block)
- to rear wiper relay terminal ①.

When the rear wiper switch is placed in the INT position, ground is supplied

- to rear wiper amplifier terminal ②
- from rear wiper switch terminal ㉑
- through body ground (E43) or (E57).

Ground is also supplied

- to rear wiper relay terminal ②
- through rear wiper amplifier terminal ⑥
- to rear wiper amplifier terminal ⑤
- through body ground (M1).

Then the rear wiper relay is energized and ground is supplied

- to rear wiper motor terminal ①
- through rear wiper relay terminal ③
- to rear wiper relay terminal ⑤
- through body ground (T19).

Rear Wiper and Washer/System Description (Cont'd)

With power and ground supplied, the rear wiper motor operates intermittently.

WASHER OPERATION

With the ignition switch in the ACC or ON position, power is supplied

- through 10A (LHD models) or 15A (RHD models) fuse (No. 16 (LHD models) or 14 (RHD models), located in the fuse block)
- to rear washer motor terminal ①.

When the ring is turned WASH position, ground is supplied

- to rear washer motor terminal ②, and
- to rear wiper amplifier terminal ①
- from terminal ㉓ of rear wiper switch
- through terminal ㉔ of rear wiper switch, and
- through body ground E43 or E57.

With power and ground is supplied, the rear washer motor operates.

The rear wiper motor operates when the ring is turned to WASH position for one second or more and for approximately 3 seconds after the ring is released. This feature is controlled by the rear wiper amplifier in the same manner as the intermittent operation.

Rear Wiper and Washer/Wiring Diagram — WIP/R —

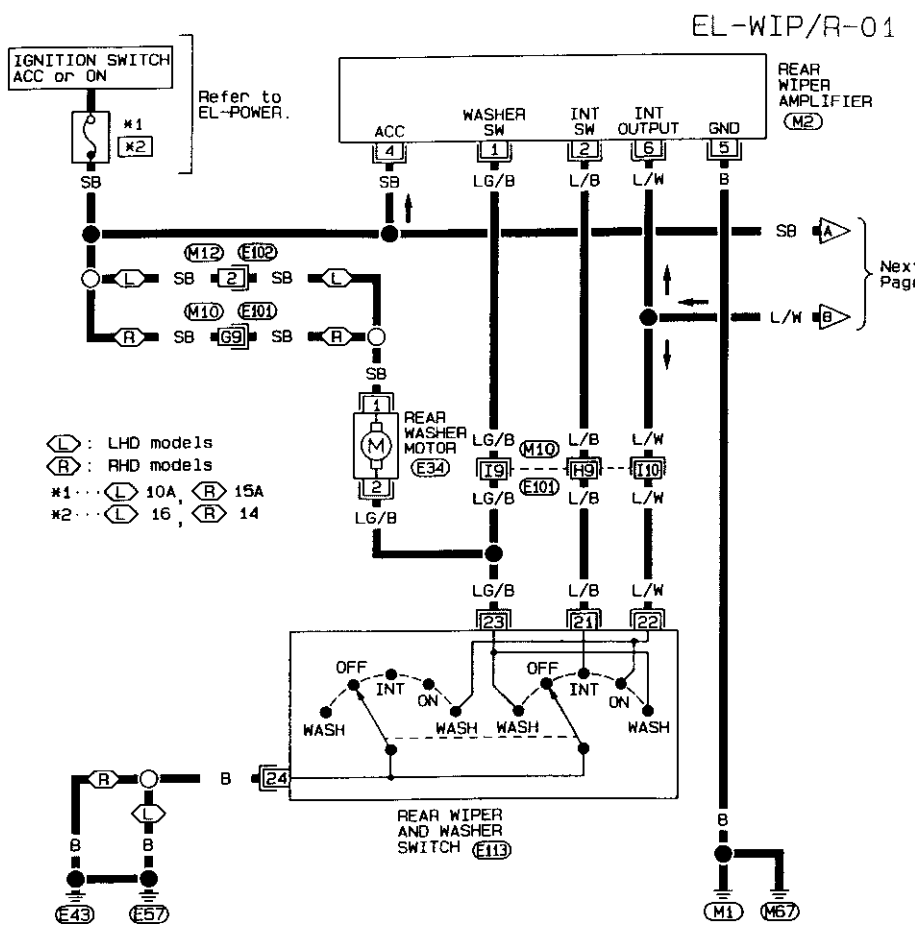

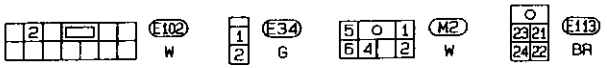

Refer to last page (Foldout page).
M10, E101

SEL743T

Rear Wiper and Washer/Wiring Diagram — WIP/R — (Cont'd)

EL-WIP/R-02

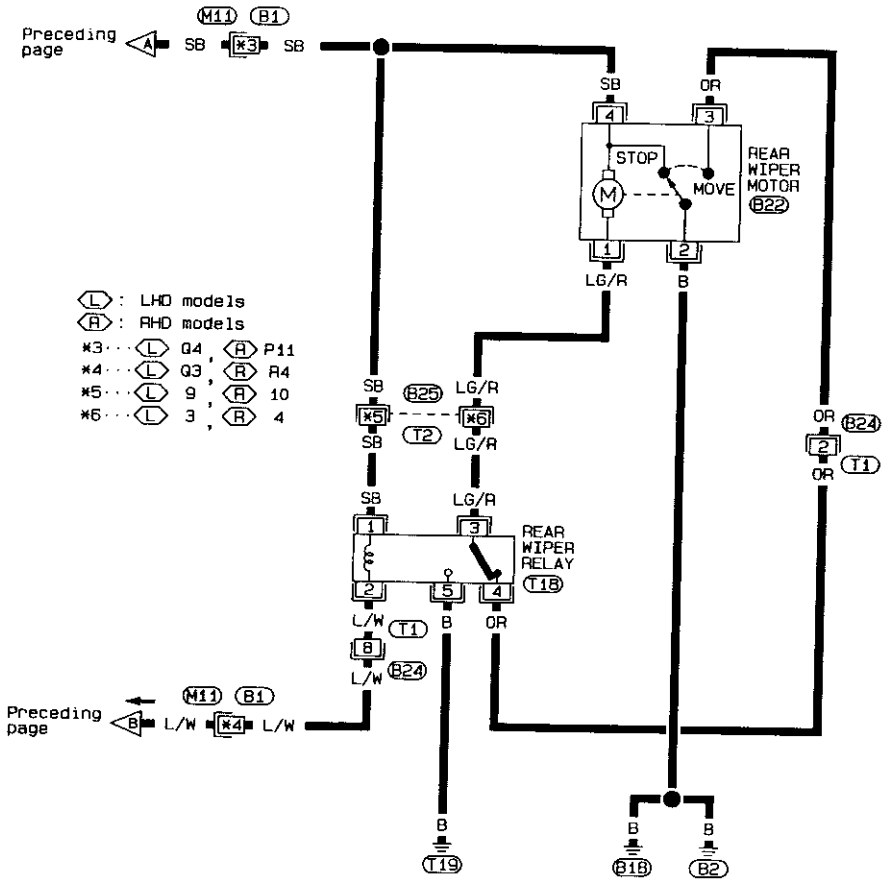

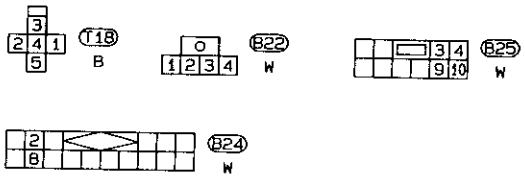

Refer to last page (Foldout page).

M11 , B1

SEL744T

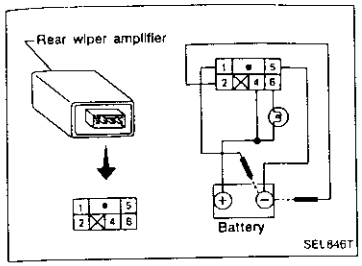

Rear Wiper Amplifier Check

1. Connect as shown in the figure at left.
2. If test lamp comes on when connected to terminal ① or ② and battery ground, wiper amplifier is normal.

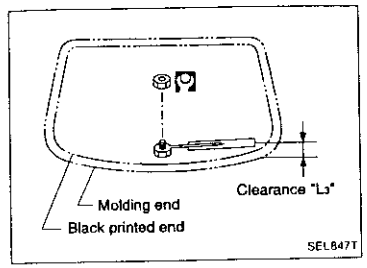

Rear Wiper Installation and Adjustment

1. Prior to wiper arm installation, turn on wiper switch to operate wiper motor and then turn it "OFF" (Auto Stop).
2. Lift the blade up and then set it down onto glass surface to set the blade center to clearance "L_3" immediately before tightening nut.
3. Eject washer fluid. Turn on wiper switch to operate wiper motor and then turn it "OFF".
4. Ensure that wiper blades stop within clearance "L_3".
   Clearance "L_3": 26 - 42 mm (1.02 - 1.65 in)

- Tighten wiper arm nuts to specified torque.
  Rear wiper:
  12.7 - 17.7 N·m (1.30 - 1.81 kg-m, 9.37 - 13.06 ft-lb)

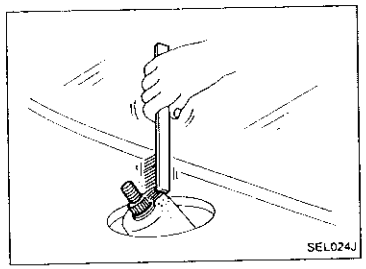

- **Before reinstalling wiper arm, clean up the pivot area as illustrated. This will reduce possibility of wiper arm looseness.**

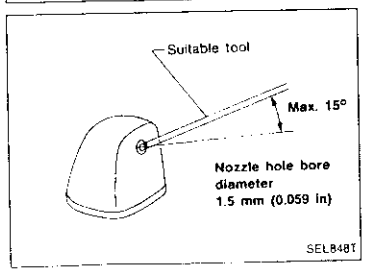

Rear Washer Nozzle Adjustment

- Using a suitable tool, adjust rear window washer nozzle to correct its spray pattern.
  Adjustable range: ±15° (in any direction)

Rear Washer Nozzle Adjustment (Cont'd)

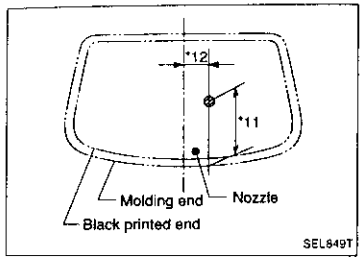

Unit: mm (in)

*11	219 (8.62)	*12	45 (1.77)

*: The diameters of these circles are less than 90 mm (3.54 in).

Rear Washer Tube Layout

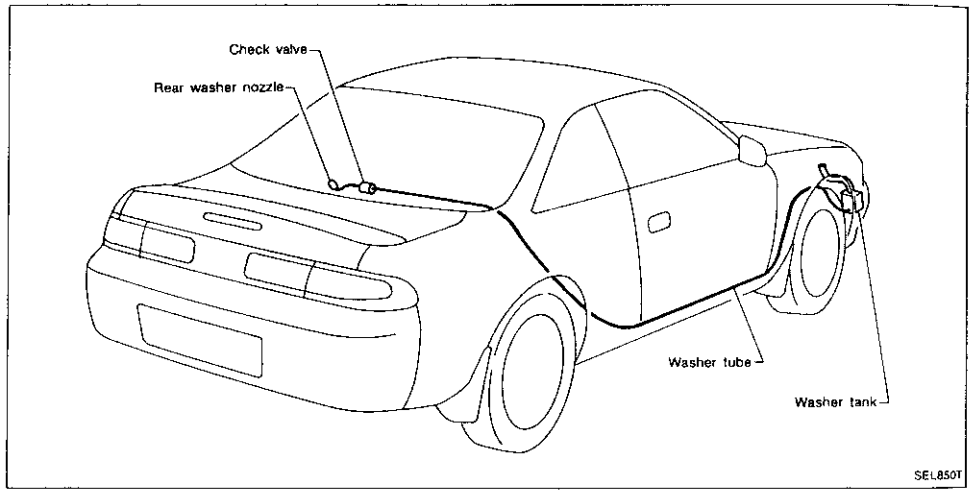

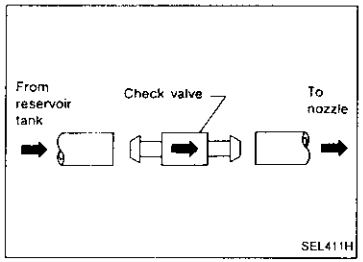

Check Valve (For rear washer)

- A check valve is provided in the rear washer fluid line. Be careful not to connect check valve to washer tube in the wrong direction.

Headlamp Washer/System Description

Power is supplied at all times
- through 25A fusible link (letter [J], located in the fusible link and fuse box)
- to headlamp washer motor terminal ①.

Power is also supplied at all times
- through 20A fuse (No. [38], located in the fusible link and fuse box)
- to lighting switch terminal ⑧.

Headlamp washer operation

The headlamp washer operates for approximately 1 second at one time. This feature is controlled by headlamp washer amplifier.

For headlamp washer operation, the lighting switch must be in the 2ND position and ignition switch in the ON or START position.

With the headlamp washer switch in the ON position, ground is supplied
- to headlamp washer amplifier terminal ②
- through headlamp washer switch terminal ①
- to headlamp washer switch terminal ⑤
- through body ground (M1) or (M67).

Ground is also supplied
- to headlamp washer motor terminal ②
- through headlamp washer amplifier terminal ④
- to headlamp washer amplifier terminal ⑤
- through body ground (E43).

With power and ground supplied, headlamp washer will operate.

Headlamp Washer/Wiring Diagram — HLC —

EL-HLC-01

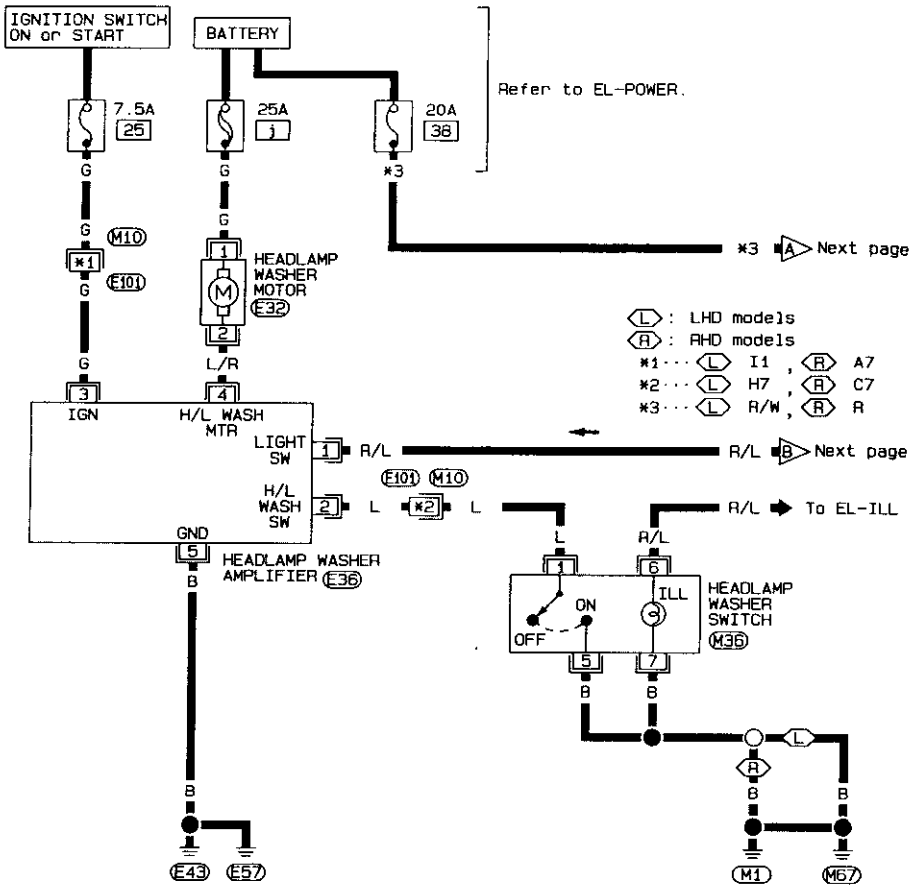

Refer to last page (Foldout page).

M10 , E101

SEL745T

Headlamp Washer/Wiring Diagram — HLC — (Cont'd)

EL-HLC-02

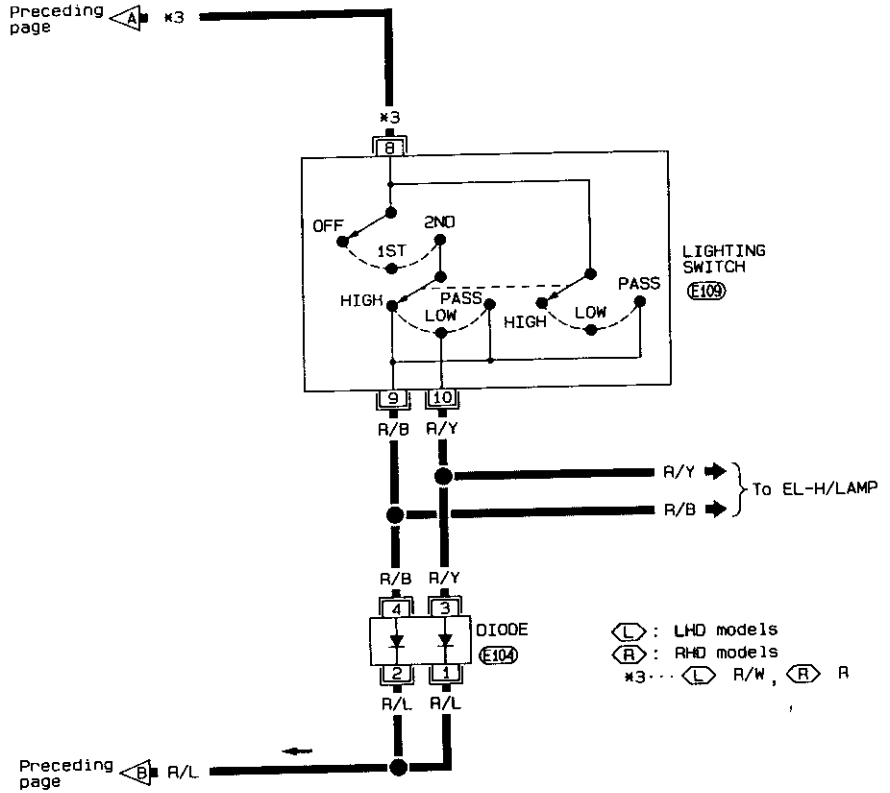

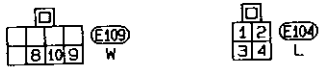

SEL746T

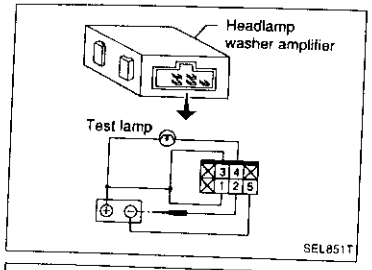

Headlamp Washer Amplifier Check

1. Connect as shown in the figure at left.
2. If test lamp comes on when connected to the terminal ② and battery ground, headlamp washer amplifier is normal.

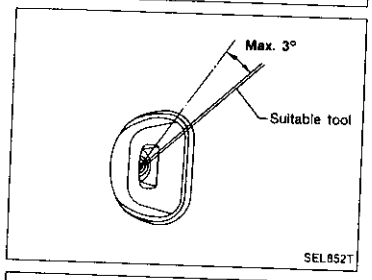

Headlamp Washer Nozzle Adjustment

- Using a suitable tool, adjust headlamp washer nozzle to correct its spray pattern.
  Adjustable range: ±3° (Up and down)

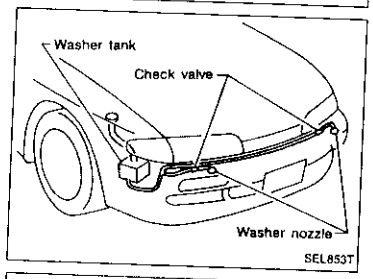

Headlamp Washer Tube Layout

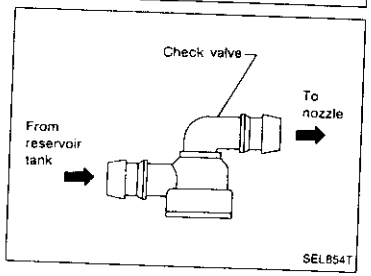

Check Valve (For headlamp washer)

System Description

Power is supplied at all times
- from 25A fusible link (Letter [f] located in the fuse and fusible link box)
- to circuit breaker terminal ①
- through circuit breaker terminal ②
- to power window relay terminal ③

With ignition switch in ON or START position, power is supplied
- through 7.5A fuse (No. [26] located in the fuse block)
- to power window relay terminal ①.

Ground is supplied to power window relay terminal ②
- through body ground (M1).

The power window relay is energized and power is supplied
- through power window relay terminal ⑤
- to power window main switch terminal ⑤,
- to power window sub-switch terminal ④,
- to power window amplifier terminal ③ and
- to power window amplifier terminal ④.

MANUAL OPERATION

Driver side door

Ground is supplied
- to power window main switch terminal ④ and
- to power window amplifier terminal ⑦
- through body ground (M1).

WINDOW UP

When the driver side switch in the power window main switch is pressed in the up position, ground signal is supplied
- to power window amplifier terminal ①
- from power window main switch terminal ③.

Power is supplied
- to driver side power window regulator terminal ①
- through power window amplifier terminal ⑤.

Ground is supplied
- to driver side power window regulator terminal ②
- through power window amplifier terminal ⑥.

Then, the motor raises the window until the switch is released.

WINDOW DOWN

When the driver side switch in the power window main switch is pressed in the down position, ground signal is supplied
- to power window amplifier terminal ②
- from power window main switch terminal ②.

Power is supplied
- to driver side power window regulator terminal ②
- through power window amplifier terminal ⑥.

Ground is supplied
- to driver side power window regulator terminal ①
- through power window amplifier terminal ⑤.

Then, the motor lowers the window until the switch is released.

Passenger side door

Ground is supplied
- to power window main switch terminal ④
- through body ground (M1).

System Description (Cont'd)

NOTE:
Numbers in parentheses are terminal numbers, when power window switch is pressed in the UP and DOWN positions respectively.

MAIN SWITCH OPERATION
Power is supplied
- through power window main switch (⑥, ⑦)
- to power window sub-switch (①, ⑤).

The subsequent operation is the same as the sub-switch operation.

SUB-SWITCH OPERATION
Power is supplied
- through power window sub-switch (②, ③)
- to passenger side power window regulator (①, ②).

Ground is supplied
- to passenger side power window regulator (②, ①)
- through power window sub-switch (③, ②)
- to power window sub-switch (⑤, ①)
- through power window main switch (⑦, ⑥)

Then, the motor raises or lowers the window until the switch is released.

AUTO OPERATION

The power window AUTO feature enables the driver to raise or lower the driver's window without holding the window switch.
The AUTO feature only operates on the driver's window.
When a power window main switch is pressed and released the AUTO position, ground signal is supplied
- to power window amplifier terminal ⑧
- from power window main switch terminal ①.

The subsequent operation is the same as the manual operation of driver side door.
Then, the driver side door window will fully close or fully open.

POWER WINDOW LOCK

The power window lock is designed to lock-out window operation to passenger side door window.
When the lock switch is pressed to lock position, ground of the passenger side switch in the power window main switch is disconnected. This prevents the power window motors from operating.

Schematic

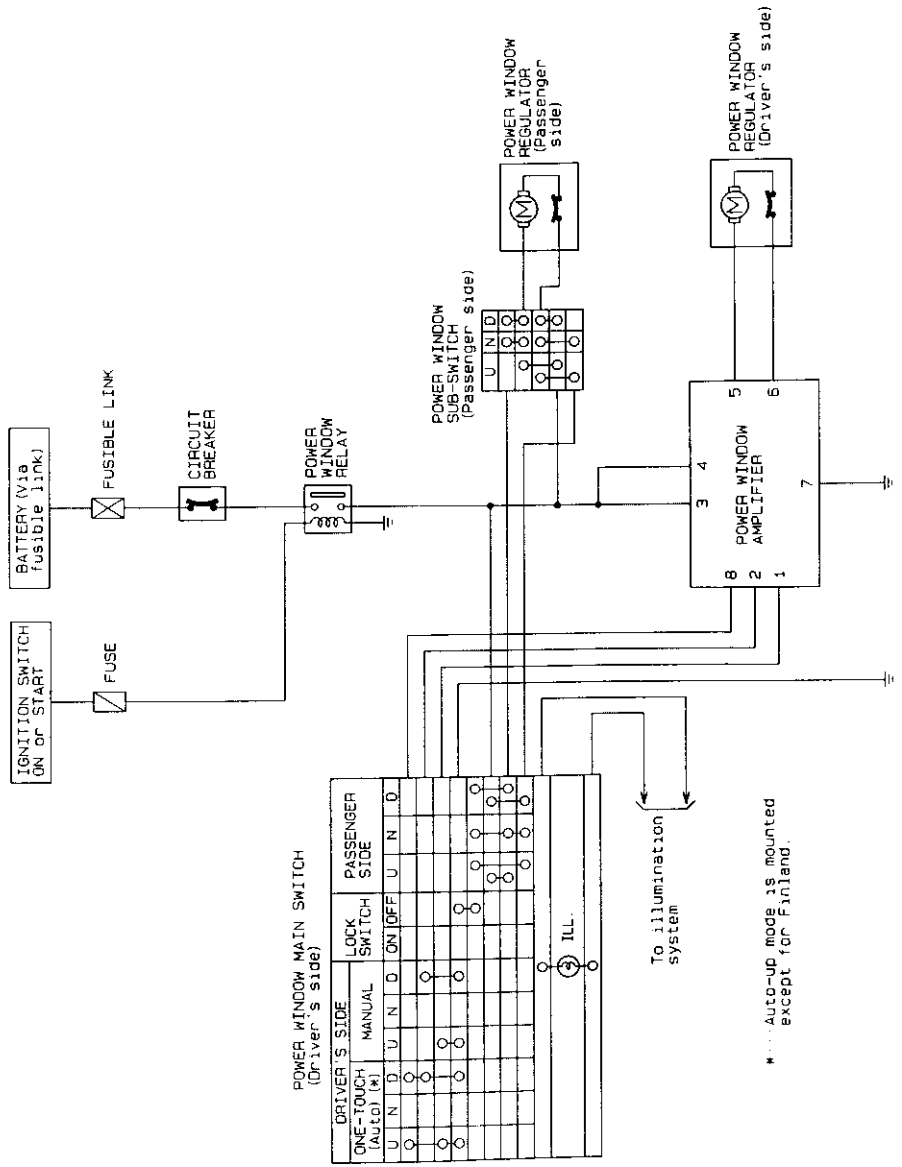

SEL747T

Wiring Diagram — WINDOW —

EL-WINDOW-01

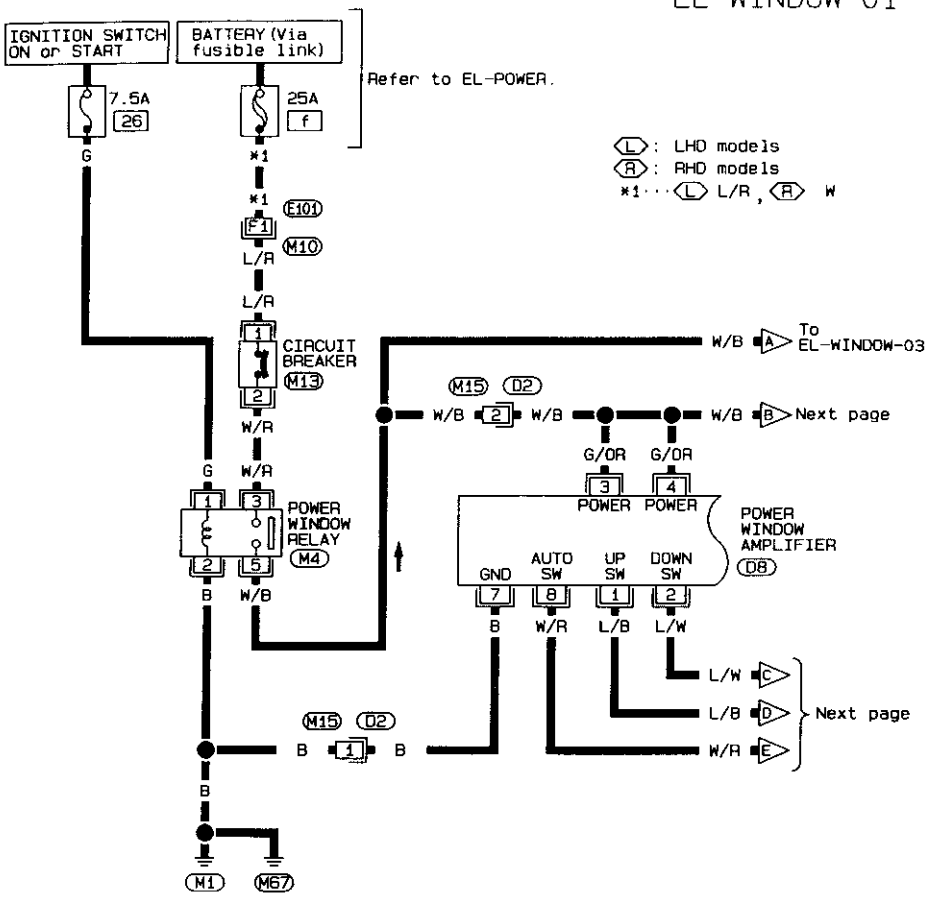

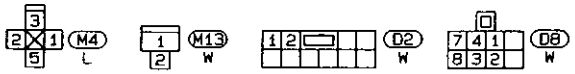

Refer to last page (Foldout page).

M10 , E101

SEL748T

Wiring Diagram — WINDOW — (Cont'd)

EL-WINDOW-02

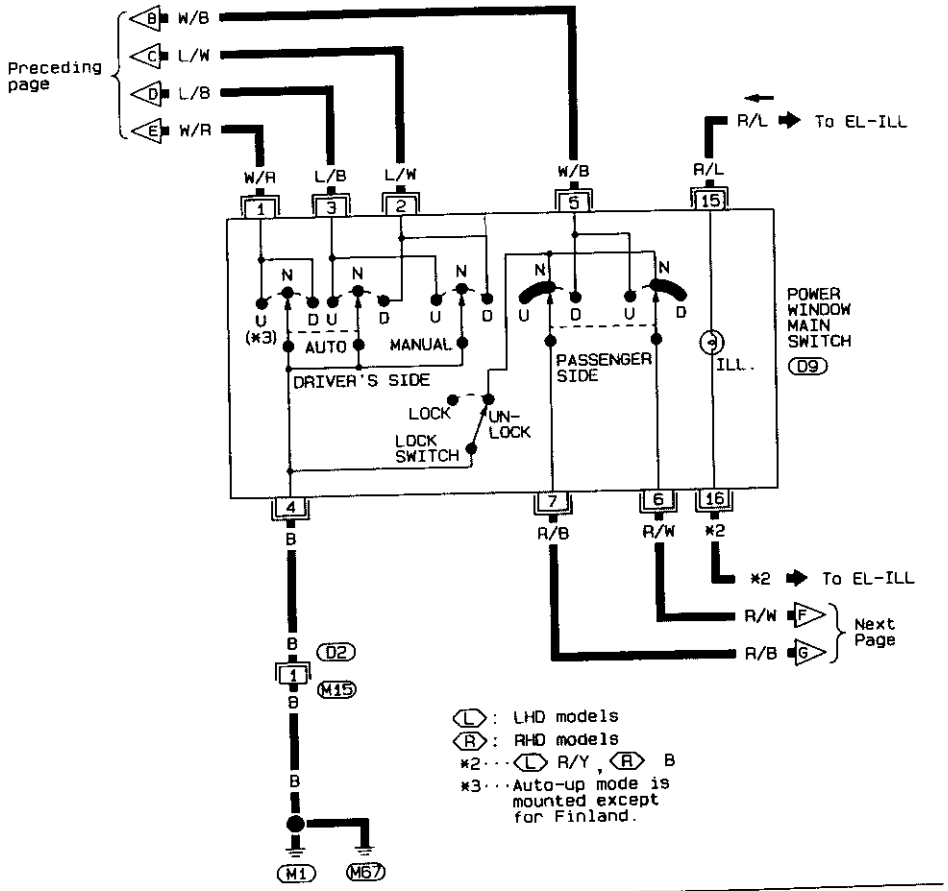

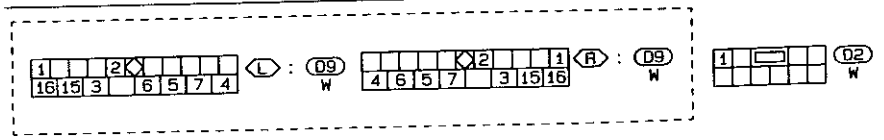

SEL749T

Wiring Diagram — WINDOW — (Cont'd)

EL-WINDOW-03

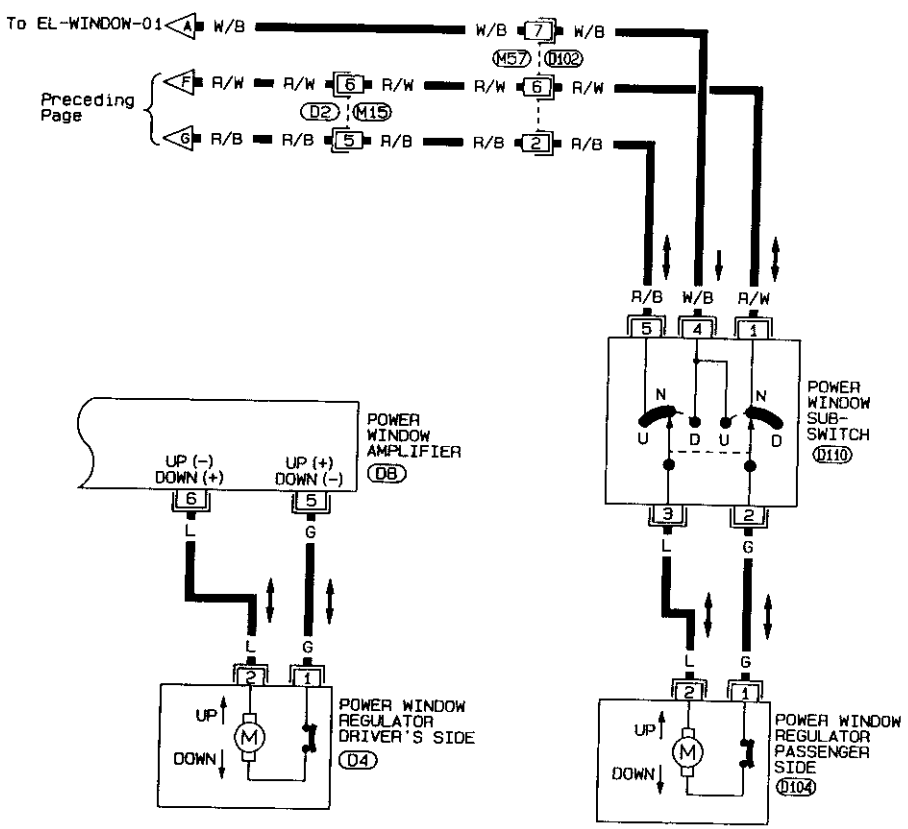

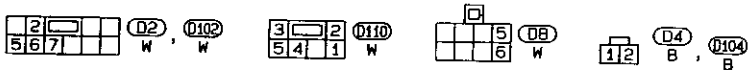

SEL750T

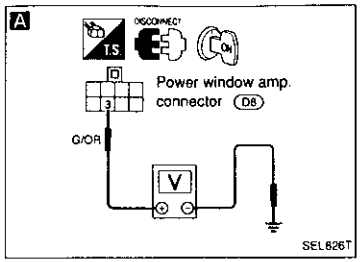

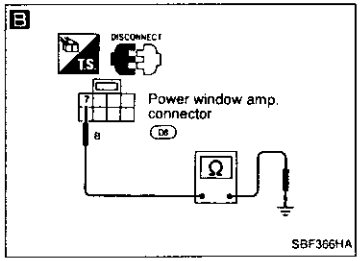

Trouble Diagnosis

DIAGNOSTIC PROCEDURE 1

SYMPTOM: Driver and passenger power window cannot be operated.

A

CHECK MAIN POWER SUPPLY AND GROUND CIRCUIT.
1) Disconnect power window amp. connector.
2) Check voltage while ignition switch is "ON".

Terminals	Voltage (V)
③ - GND	Approx. 12

NG → Check the following
- Fuse
- Power window relay
- Power supply harness

OK ↓

B

Check continuity between power window amp. terminal ⑦ and GND.
Does continuity exist?

No → Repair harness.

Yes ↓

Go to DIAGNOSTIC PROCEDURE 2 and 3.

Trouble Diagnosis (Cont'd)

DIAGNOSTIC PROCEDURE 2

SYMPTOM: Driver's power window cannot be operated but passenger power window can be operated.

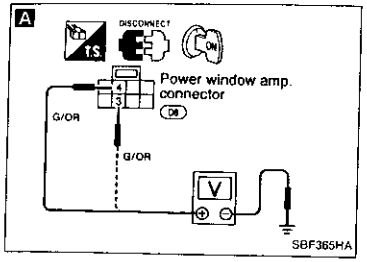

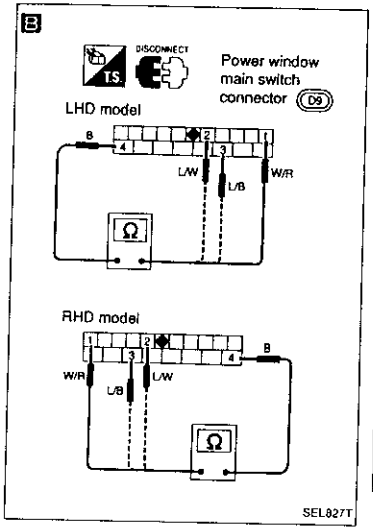

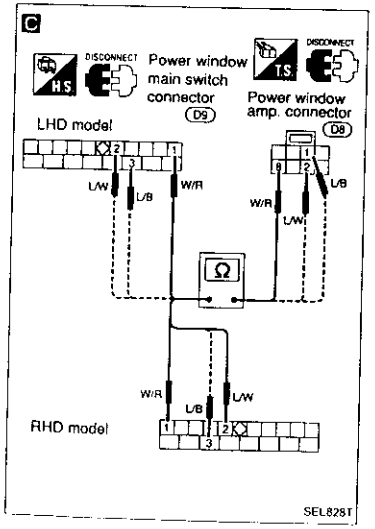

A

CHECK POWER SUPPLY FOR POWER WINDOW AMP.

1) Disconnect connector from power window amp.
2) Check voltage across power window amp. terminal ③ and GND, ④ and GND while ignition switch is "ON".

Terminals	Battery voltage existence
③ - GND	Yes
④ - GND	

NG → Repair harness between power window relay and power window amp

OK ↓

B

CHECK POWER WINDOW MAIN SWITCH CIRCUIT.

1) Disconnect connector from power window main switch.
2) Check continuity.

Power window main switch operation	Terminals
Auto (Down)	① - ④
Up	③ - ④
Down	② - ④

Does continuity exist?

No → Replace power window main switch.

Yes ↓

C

1) Disconnect connector from power window amp. connector
2) Check continuity.

	Terminals
Auto	① - ⑧
Up	③ - ①
Down	② - ②

Does continuity exist?

No → Repair harness.

Yes ↓

Ⓐ

(Go to next page)

Trouble Diagnosis (Cont'd)

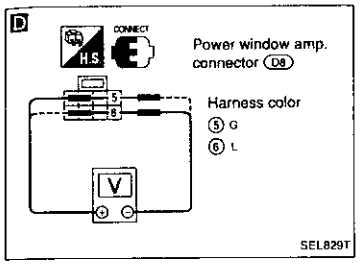

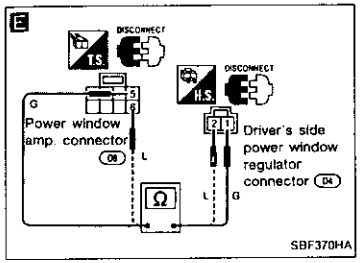

Ⓐ ↓

D

CHECK POWER WINDOW MOTOR CIRCUIT.

1) Connect power window amp. connector.
2) Check voltage for power window motor.

Terminals ⊕	Terminals ⊖	Power window main switch operation
⑤	⑥	Up
⑥	⑤	Down

Does battery voltage exist?

No → Replace power window amp.

Yes ↓

E

1) Disconnect driver side power window regulator connector.
2) Check continuity.

Terminals
⑤ - ①
⑥ - ②

Does continuity exist?

No → Repair harness.

Yes ↓

Check driver side power window motor. Refer to "ELECTRICAL COMPONENTS INSPECTION" (EL-168).

Trouble Diagnosis (Cont'd)

DIAGNOSTIC PROCEDURE 3-1

SYMPTOM: Passenger power window (main switch and sub-switch) cannot be operated. But driver side power window can be operated.

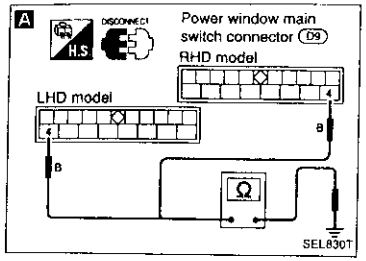

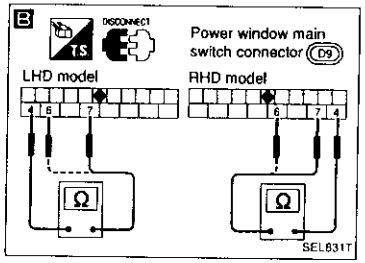

A

CHECK GROUND CIRCUIT.
1) Disconnect power window main switch connector.
2) Check continuity between power window main switch terminal ④ and GND.

Does continuity exist?

No → Repair harness.

Yes

B

CHECK POWER WINDOW MAIN SWITCH.
Check continuity when power window lock switch is in "UNLOCK" position.

Terminals
⑦ - ④
⑥ - ④

Does continuity exist?

No → Replace power window main switch.

Yes

Check passenger side power window motor. Refer to "ELECTRICAL COMPONENTS INSPECTION" (EL-168).

Trouble Diagnosis (Cont'd)

DIAGNOSTIC PROCEDURE 3-2

SYMPTOM: Passenger power window cannot be operated using main switch. But driver side and passenger side (using sub-switch) can be operated.

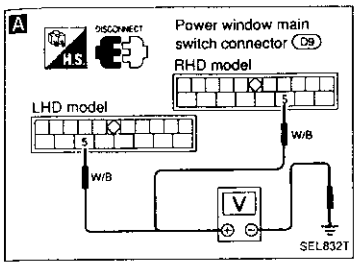

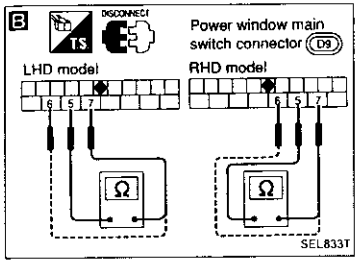

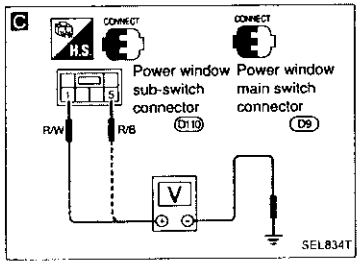

A

CHECK MAIN POWER SUPPLY.
1) Disconnect power window main switch connector.
2) Check voltage across power window main switch terminal ⑤ and GND.

Does battery voltage exist?

No → Repair harness.

Yes

B

CHECK POWER WINDOW MAIN SWITCH.
Check continuity.

Power window main switch operation	Terminals
Up	⑥ - ⑤
Down	⑦ - ⑤

Does continuity exist?

No → Replace power window main switch

Yes

C

1) Connect power window main switch connector.
2) Check voltage.

Power window main switch operation	Terminals
Up	① - GND
Down	⑤ - GND

Does battery voltage exist?

No → Repair harness.

Yes

Replace power window sub-switch.

Trouble Diagnosis (Cont'd)

DIAGNOSTIC PROCEDURE 3-3

SYMPTOM: Passenger power window cannot be operated using sub-switch. But driver side and passenger side (using main switch) can be operated.

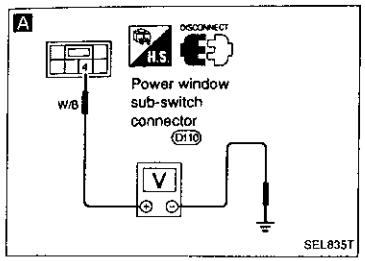

A

CHECK MAIN POWER SUPPLY.
1) Disconnect power window sub-switch connector.
2) Check voltage across power window sub-switch terminal ④ and GND.
Does battery voltage exist?

No → Repair harness.

Yes ↓

Replace power window sub-switch.

Note: If passenger power window does not lock using lock button of main switch, replace main switch.

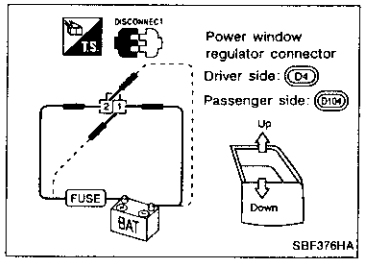

ELECTRICAL COMPONENTS INSPECTION

POWER WINDOW MOTOR

Terminals		Operation
⊕	⊖	
①	②	Upward
②	①	Downward

System Description

Power is supplied at all times
- through 25A fusible link (No. [f] located in the fuse and fusible link box)
- to circuit breaker terminal ①
- through circuit breaker terminal ②
- to smart entrance control unit terminal ①.

Ground is supplied to smart entrance control unit terminal ⑩ through body ground M1.

POWER DOOR LOCK OPERATION

When one of the following input signals is supplied:
- driver side door is locked/unlocked using key or lock knob,
- passenger side door is locked/unlocked using key or lock knob (Only for models with multi-remote control system):

Smart entrance control unit locks/unlocks driver side door (Only for models with multi-remote control system) and passenger side door.
For operation by the remote controller, refer to "MULTI-REMOTE CONTROL SYSTEM".

Input (Unlock signal)

Models with multi-remote control system

When the driver side door is unlocked using key or lock knob, ground is supplied
- to smart entrance control unit terminal ⑫
- through driver side door lock actuator (door unlock sensor) terminal ④
- to driver side door lock actuator (door unlock sensor) terminal ②
- through body ground M1.

When the passenger side door is unlocked using key or lock knob, ground is supplied
- to smart entrance control unit terminal ⑬
- through passenger side door lock actuator (door unlock sensor) terminal ④
- to passenger side door lock actuator (door unlock sensor) terminal ②
- through body ground M67.

Models without multi-remote control system

When the driver side door is unlocked using key or lock knob, ground is supplied
- to smart entrance control unit terminal ⑫
- through lock knob switch terminal ②
- to lock knob switch terminal ①
- through body ground M1.

Input (Lock signal)

The smart entrance control unit terminal ⑫ or ⑬ receives lock signal when the unlock signal is shut off.

Output (Unlock)

Driver side door (Models with multi-remote control system)

Power is supplied
- to driver side door lock actuator terminal ①
- through smart entrance control unit terminal ③.

Then, the door is unlocked.
Ground is supplied
- to driver side door lock actuator terminal ③
- through smart entrance control unit terminal ⑤.

Passenger side door

Power is supplied
- to passenger side door lock actuator terminal ①
- through smart entrance control unit terminal ②.

Ground is supplied
- to passenger side door lock actuator terminal ③
- through smart entrance control unit terminal ④.

Then, the door is unlocked.

System Description (Cont'd)

Output (Lock)

Driver side door (Models with multi-remote control system)

Power is supplied

- to driver side door lock actuator terminal ③
- through smart entrance control unit terminal ⑤.

Then, the door is locked.

Ground is supplied

- to driver side door lock actuator terminal ①
- through smart entrance control unit terminal ③.

Passenger side door

Power is supplied

- to passenger side door lock actuator terminal ③
- through smart entrance control unit terminal ④.

Ground is supplied

- to passenger side door lock actuator terminal ①
- through smart entrance control unit terminal ②.

Then, the door is locked.

Wiring Diagram — D/LOCK —

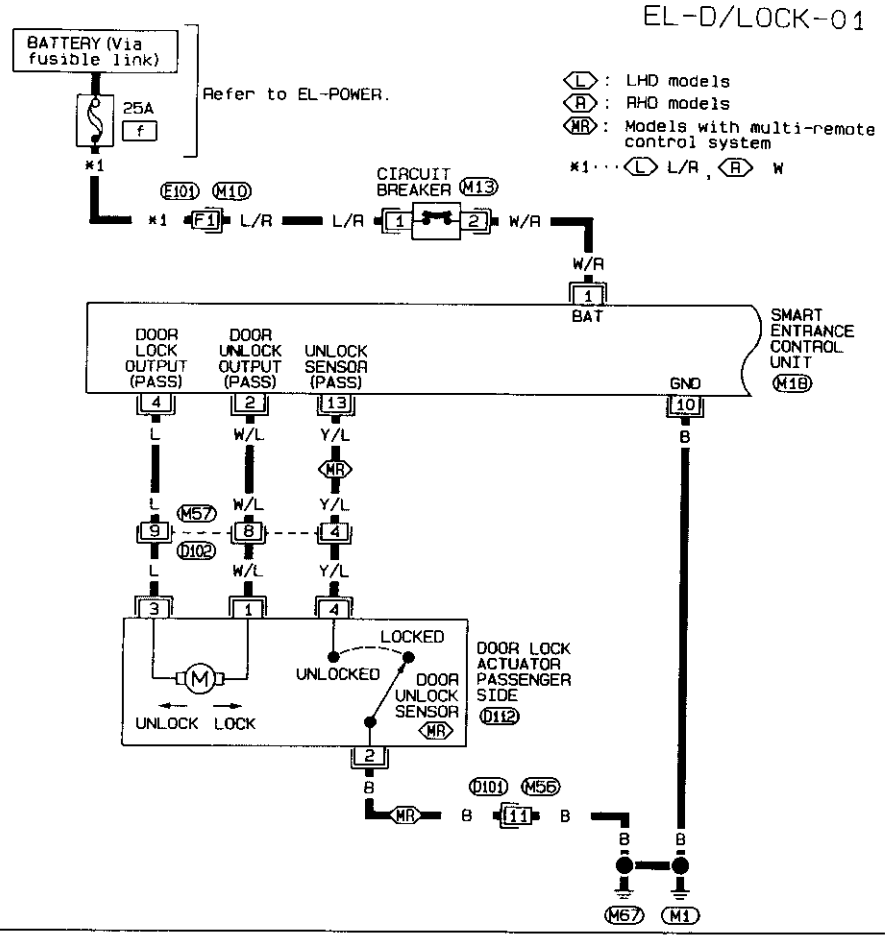

Wiring Diagram — D/LOCK — (Cont'd)

EL-D/LOCK-02

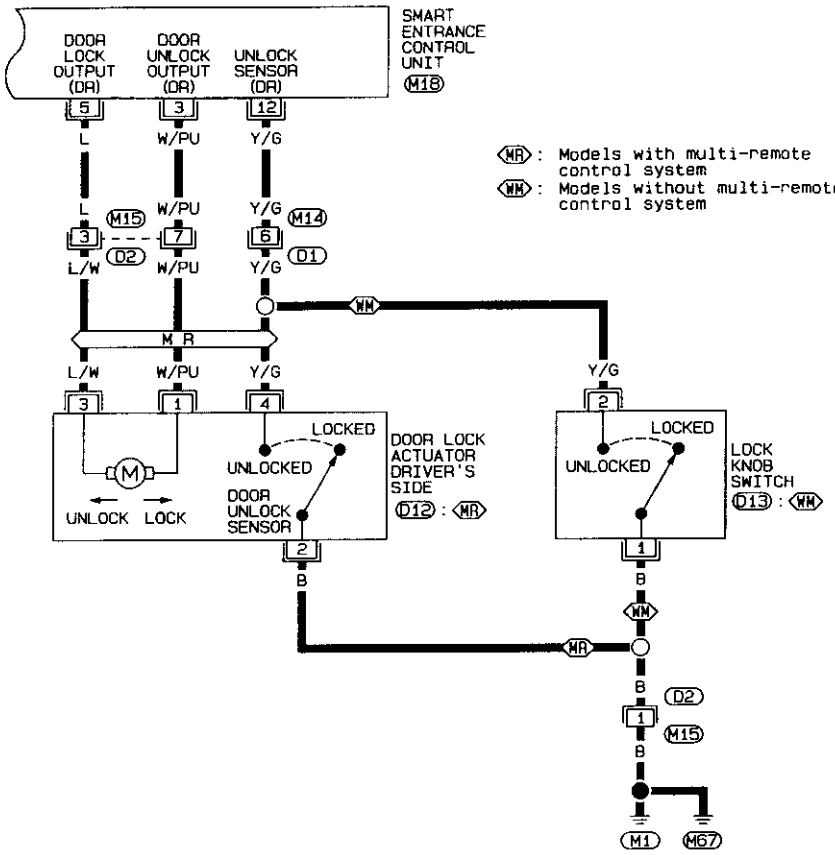

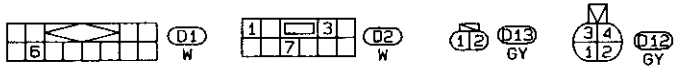

Refer to last page (Foldout page).

M18

SEL752T

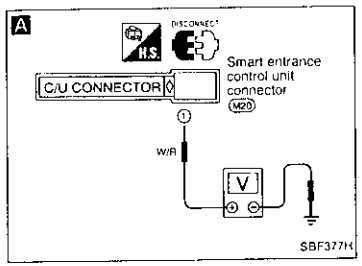

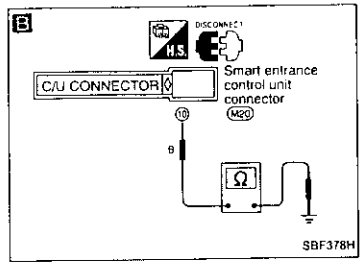

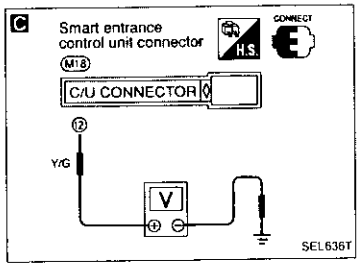

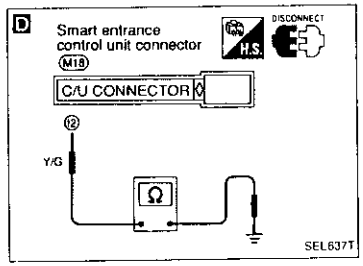

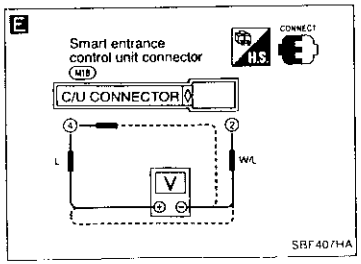

Trouble Diagnoses

DIAGNOSTIC PROCEDURE

SYMPTOM: Power door lock cannot be operated.

A

CHECK MAIN POWER SUPPLY AND GROUND CIRCUIT.
1) Disconnect connector from control unit.
2) Check voltage across control unit terminal ① and GND.
Does battery voltage exist?

No → Check the following.
- Fuse
- Circuit breaker
- Power supply harness

Yes ↓

B

Check continuity between terminal ⑩ and GND.
Does continuity exist?

No → Check GND harness.

Yes ↓

C

CHECK UNLOCK SENSOR CIRCUIT.
1) Connect control unit connector.
2) Check voltage across control unit terminal ⑫ and GND

Driver side door lock knob condition	Terminals	Voltage (V)
Locked → Unlocked → Locked	⑫ - GND	12 → 0 → 12

NG → **D**

1) Disconnect connector from control unit.
2) Check continuity between ⑫ and GND.

Driver side door lock knob condition	Terminals
Unlocked	⑫ - GND

Does continuity exist?

No → Replace smart entrance control unit.

Yes → Repair door knob switch harness or replace lock knob switch.

OK ↓

E

CHECK DOOR LOCK ACTUATOR CIRCUIT.
Check voltage for door lock motor.

Driver side door lock knob condition	Terminals ⊕	Terminals ⊖
Locked	④	②
Unlocked	②	④

Does battery voltage exist?

Yes → Replace smart entrance control unit.

No ↓

A
(Go to next page)

Trouble Diagnoses (Cont'd)

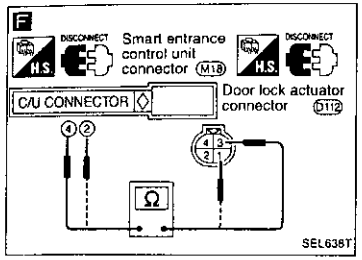

Ⓐ

F

1) Disconnect control unit connector and door lock actuator connector.
2) Check continuity.

Terminals	Continuity
④ - ③	Yes
② - ①	

Does continuity exist?

No → Repair harness.

Yes →

Check power door lock motor. Refer to "ELECTRICAL COMPONENTS INSPECTION".

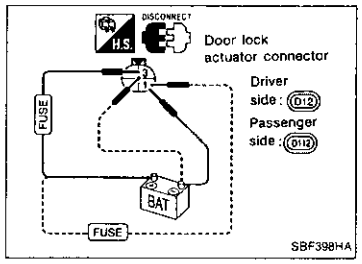

ELECTRICAL COMPONENTS INSPECTION

Power door lock motor

Door lock condition	Terminals	
	⊕	⊖
Unlocked → Locked	③	①
Locked → Unlocked	①	③

★ For removal of door mirror, refer to "DOOR MIRROR" in BT section.

Wiring Diagram — MIRROR —

LHD MODELS

EL-MIRROR-01

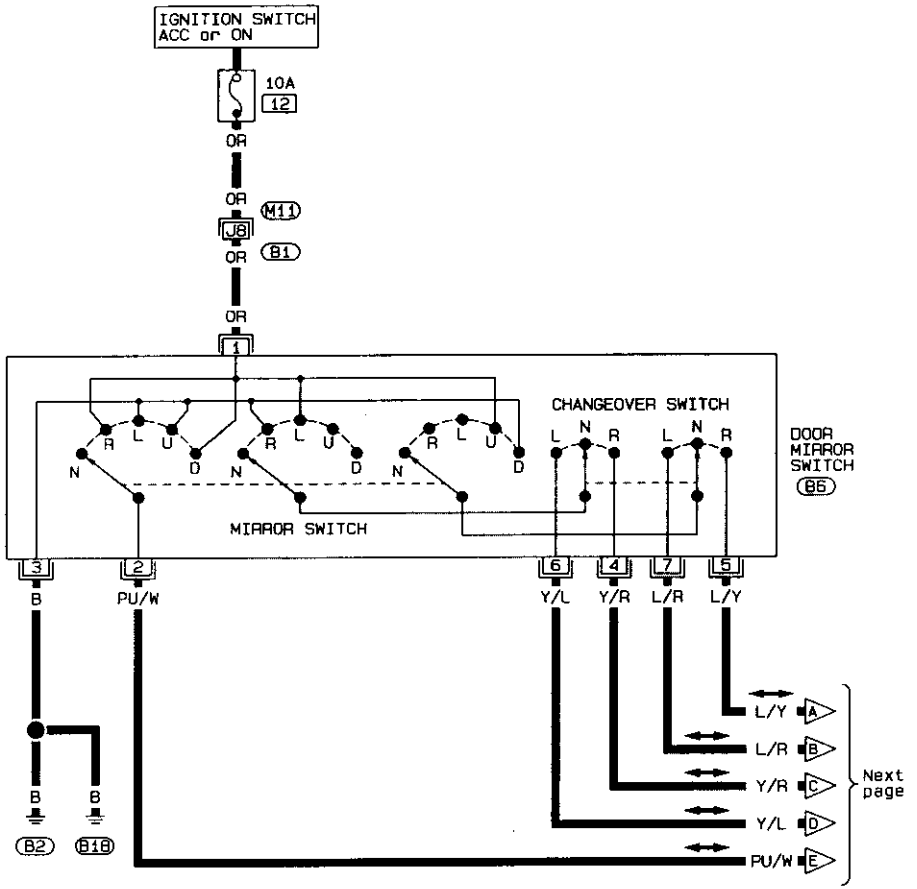

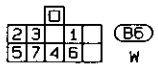

Refer to last page (Foldout page).

M11 , B1

SEL753T

EL-MIRROR-02

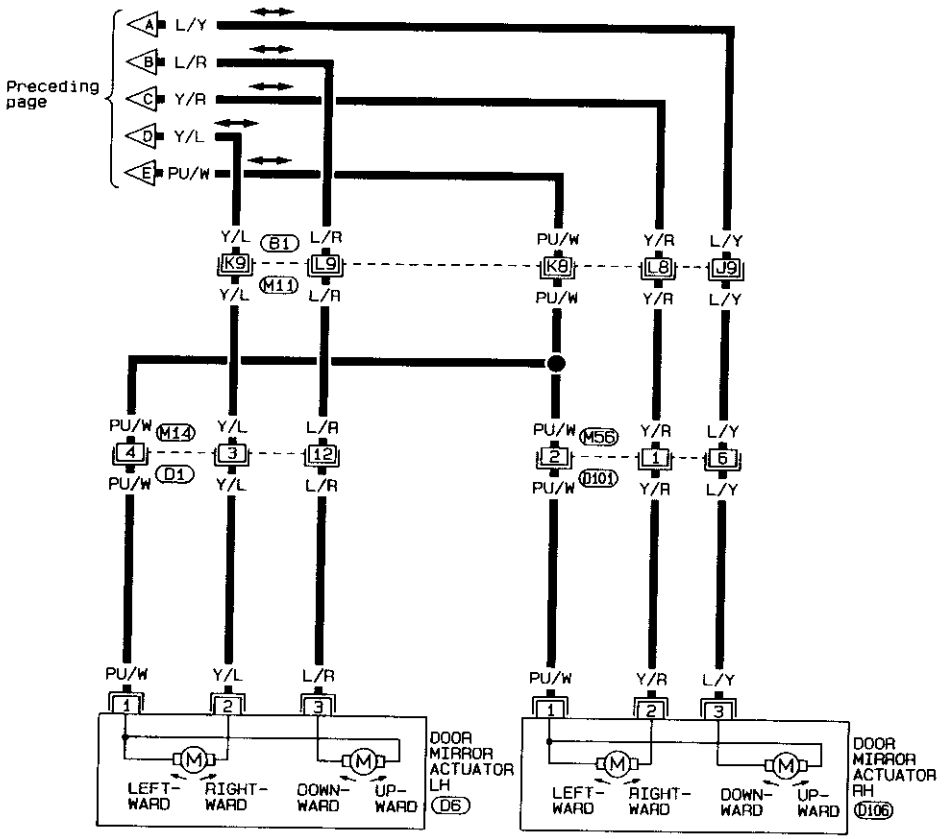

D6, D106
W, W

1 2 3 4 6 12
D1, D101
W, W

Refer to last page (Foldout page).

M11, B1

SEL754T

RHD MODELS

EL-MIRROR-03

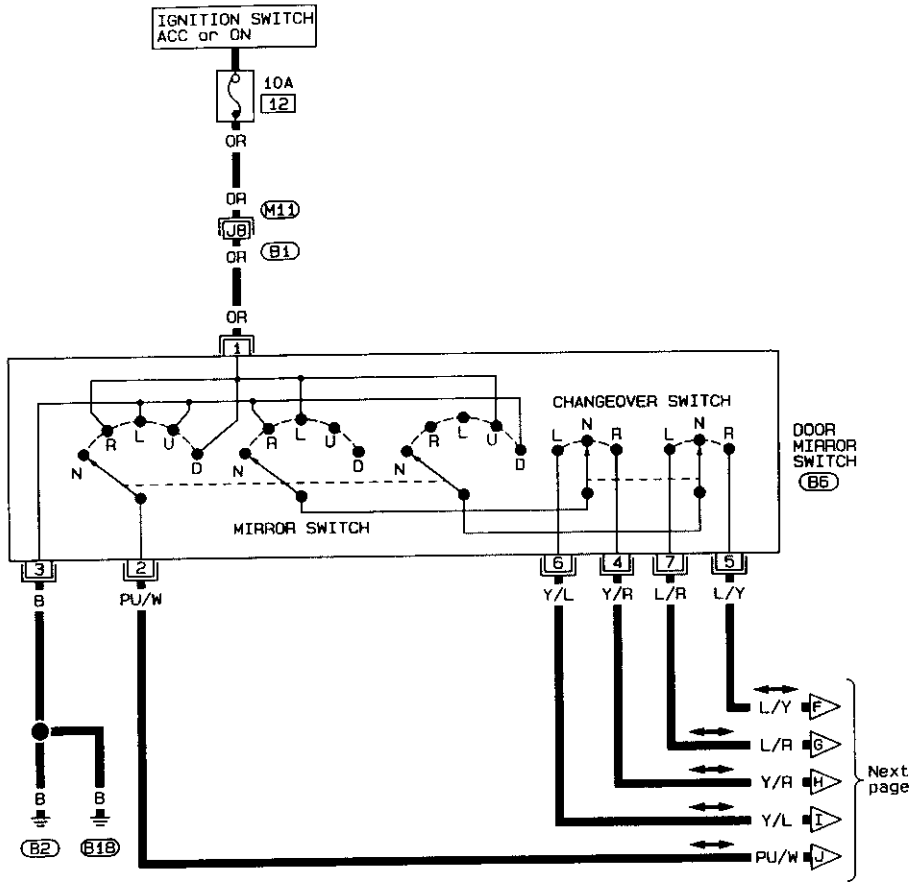

2 3 1 5 7 4 6
B6
W

Refer to last page (Foldout page).

M11, B1

SEL837T

Wiring Diagram — MIRROR — (Cont'd)

EL-MIRROR-04

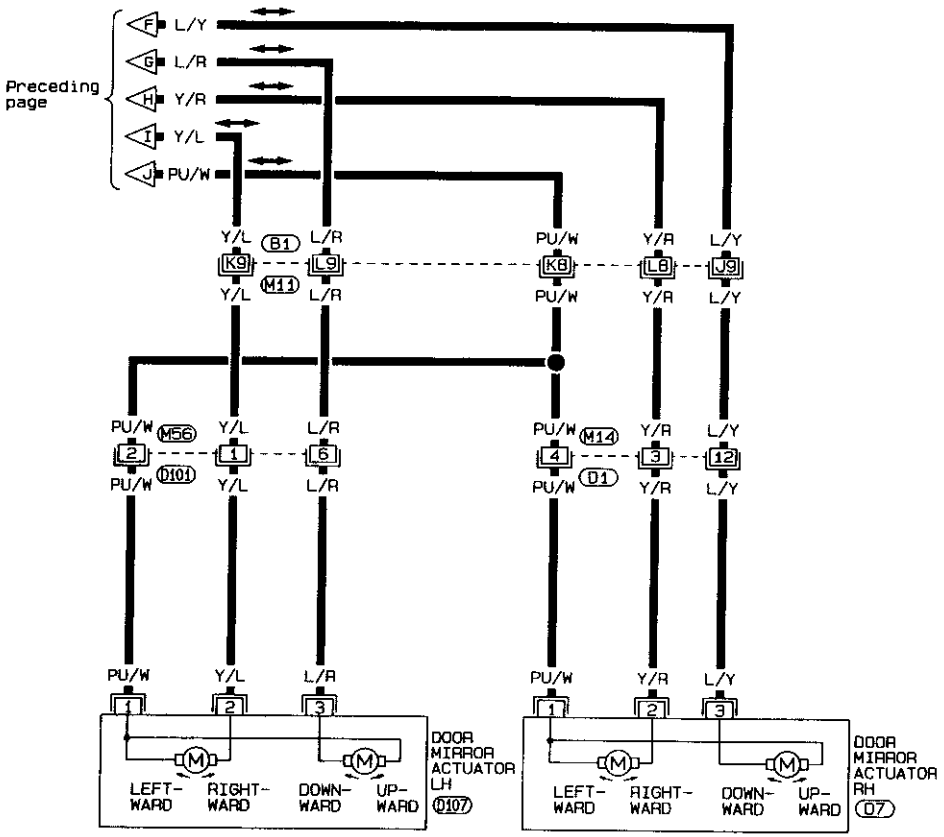

D7 W , D107 W

D1 W , D101 W

Refer to last page (Foldout page).

M11 , B1

SEL838T

★ For removal and adjustment of sunroof, refer to "SUNROOF" in BT section.

Wiring Diagram — SROOF —

EL-SROOF-01

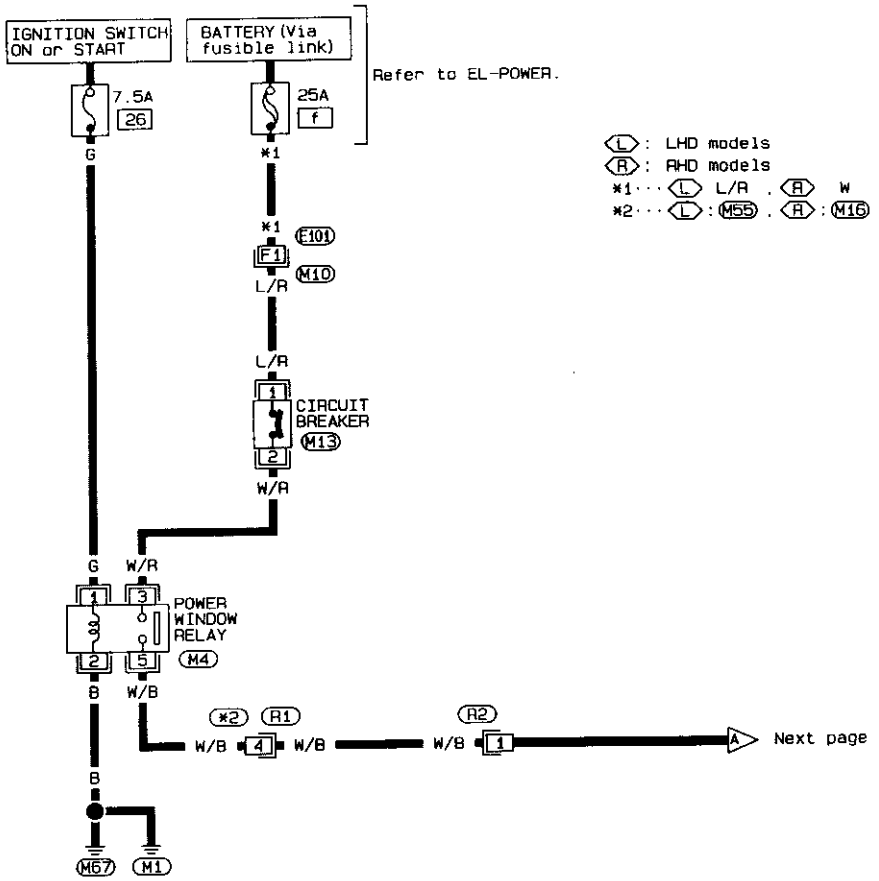

M4 L , M13 W , R1 W , R2 W

Refer to last page (Foldout page).

M10 , E101

SEL755T

Wiring Diagram — SROOF — (Cont'd)

EL-SROOF-02

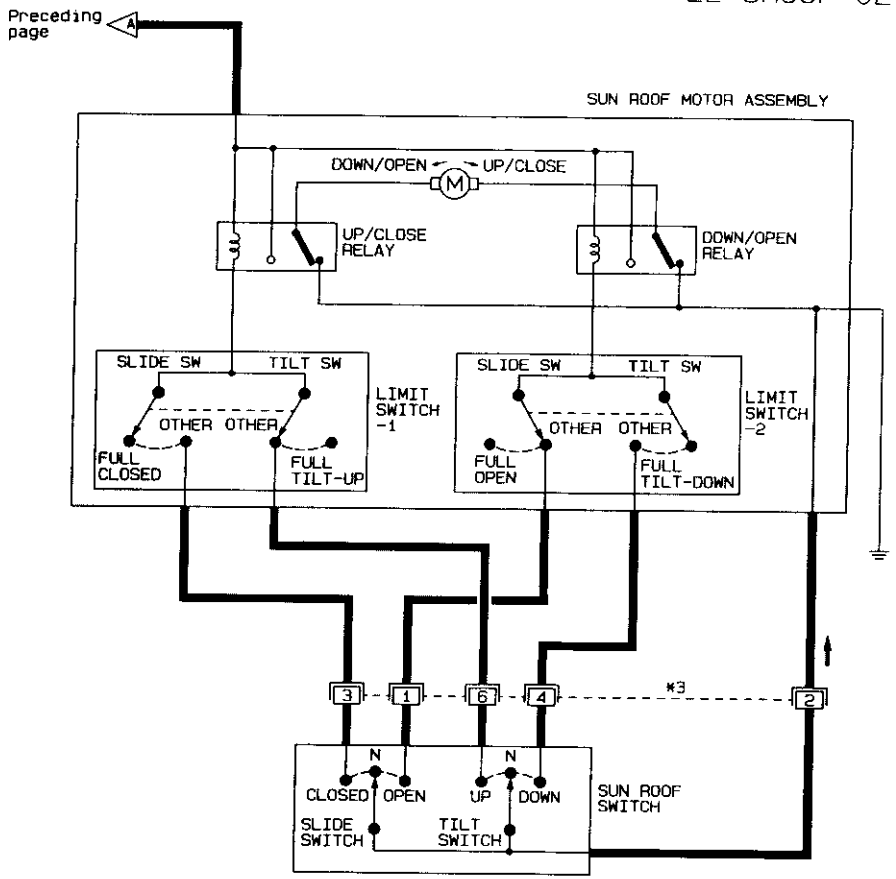

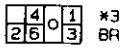

SEL756T

Wiring Diagram — HORN —

LHD MODELS

EL-HORN-01

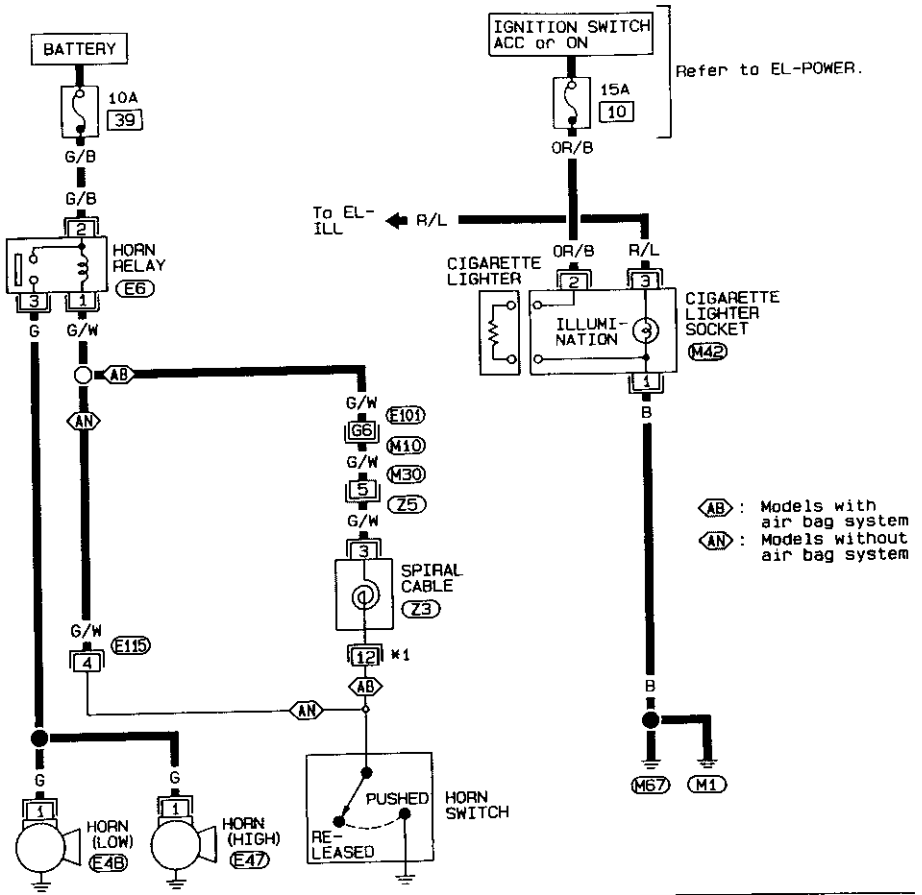

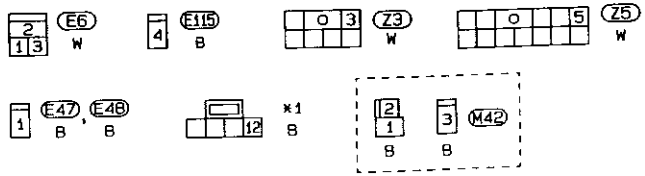

Refer to last page (Foldout page).

M10 , E101

SEL757T

Wiring Diagram — HORN — (Cont'd)

EL-HORN-02

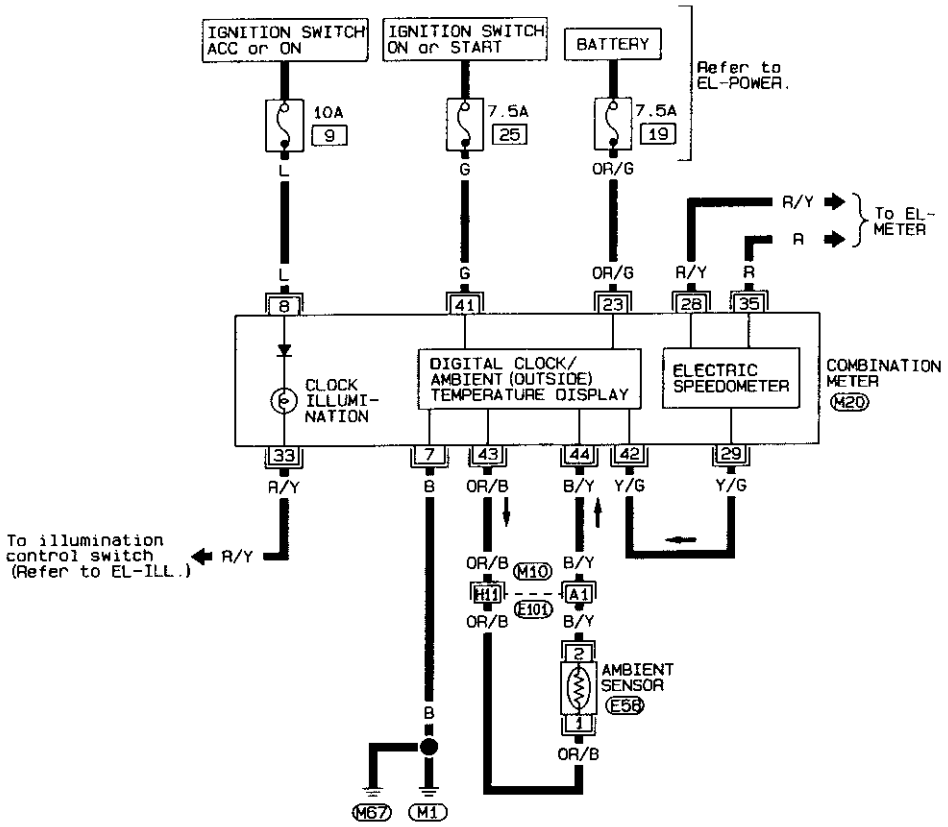

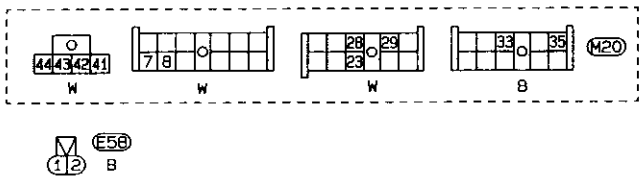

Refer to last page (Foldout page).

M10 , E101

SEL758T

Wiring Diagram — HORN — (Cont'd)

RHD MODELS

EL-HORN-03

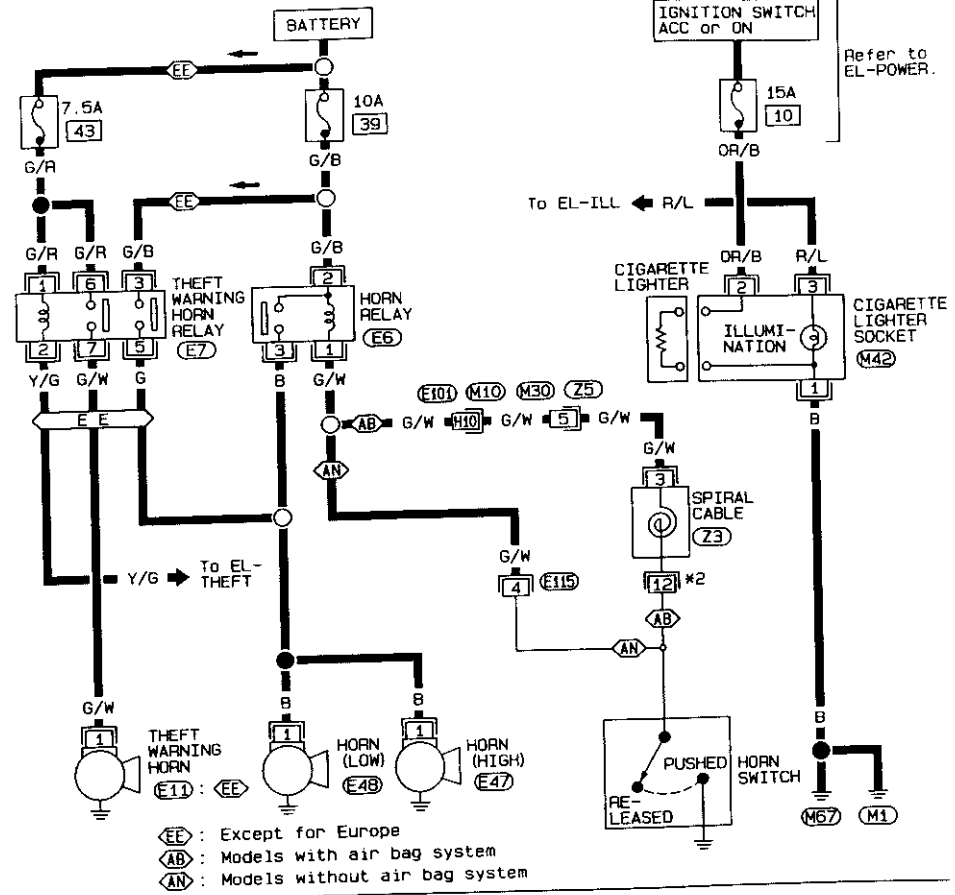

EE : Except for Europe
AB : Models with air bag system
AN : Models without air bag system

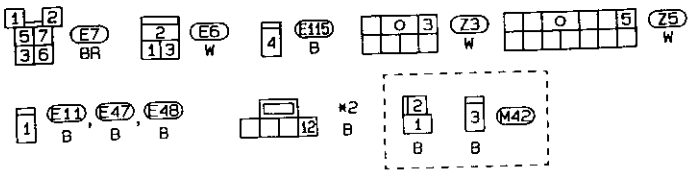

Refer to last page (Foldout page).

M10 , E101

SEL759T

Wiring Diagram — HORN — (Cont'd)

EL-HORN-04

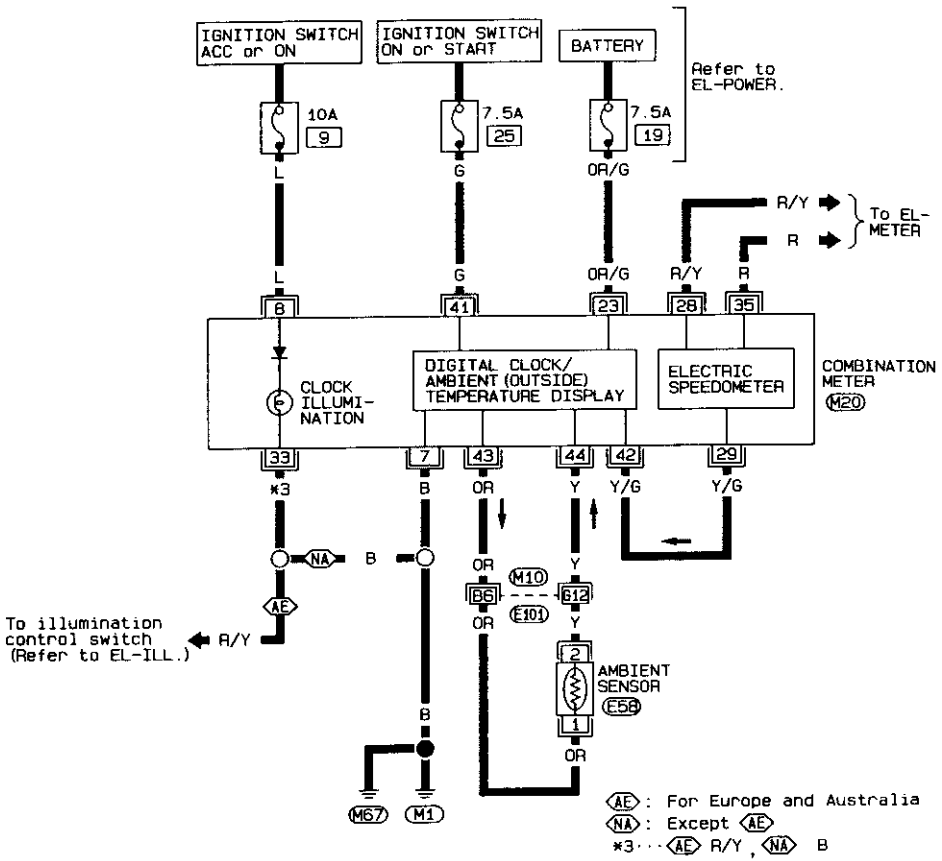

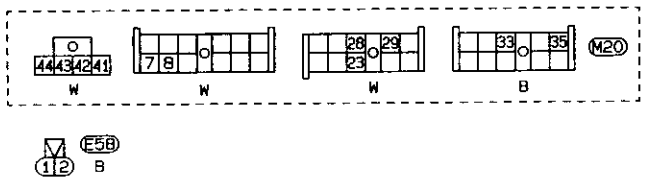

Refer to last page (Foldout page).

M10 , E101

SEL760T

System Description

The rear window and door mirror defogger system is controlled by the smart entrance control unit.

Power is supplied at all times
- to rear window defogger relay terminal ③
- through 15A fuse (No. 18 , located in the fuse block) and
- to rear window defogger relay terminal ⑥
- through 15A fuse (No. 17 , located in the fuse block) and
- to mirror defogger relay terminal ③
- through 10A fuse (No. 12 , located in the fuse block).

With the ignition switch in the ON or START position, power is supplied
- to each defogger relay terminal ① and
- to smart entrance control unit terminal ⑪.

Ground is supplied
- to rear window defogger switch terminal ② and
- to smart entrance control unit terminal ⑩
- through body ground M1 or M67.

Operation

The ignition switch must be in the ON or START position for defogger operation.

With the rear window defogger switch in the ON position and for approximately 15 minutes after the rear window defogger switch has turned to OFF from ON, ground is supplied
- through terminal ① of the rear window defogger switch
- to smart entrance control unit terminal ⑳.

Terminal ⑯ of the smart entrance control unit then supplies ground to each defogger relay terminal ②.

With power and ground supplied, each defogger relay is energized.

For rear window defogger system, power is supplied
- through terminals ⑤ and ⑦ of the rear window defogger relay
- to condenser terminal ①
- through terminal ② of the condenser
- to the rear window defogger terminal ①.

For mirror defogger system, power is supplied
- through mirror defogger relay terminal ⑤
- to each door mirror defogger terminal ①.

Ground is supplied
- to rear window defogger terminal ②
- through body ground B104, and
- to each door mirror defogger terminal ③
- through body ground M1 or M67.

With power and ground supplied, each defogger filament heats and defogs the rear window and door mirror.

When the system is activated, the rear window defogger indicator illuminates in the rear window defogger switch.

Power is supplied
- to terminal ③ of the rear window defogger switch
- from terminal ⑤ of the rear window defogger relay.

Terminal ④ of the rear window defogger switch is grounded through body ground M1 or M67.

Wiring Diagram — DEF —

EL-DEF-01

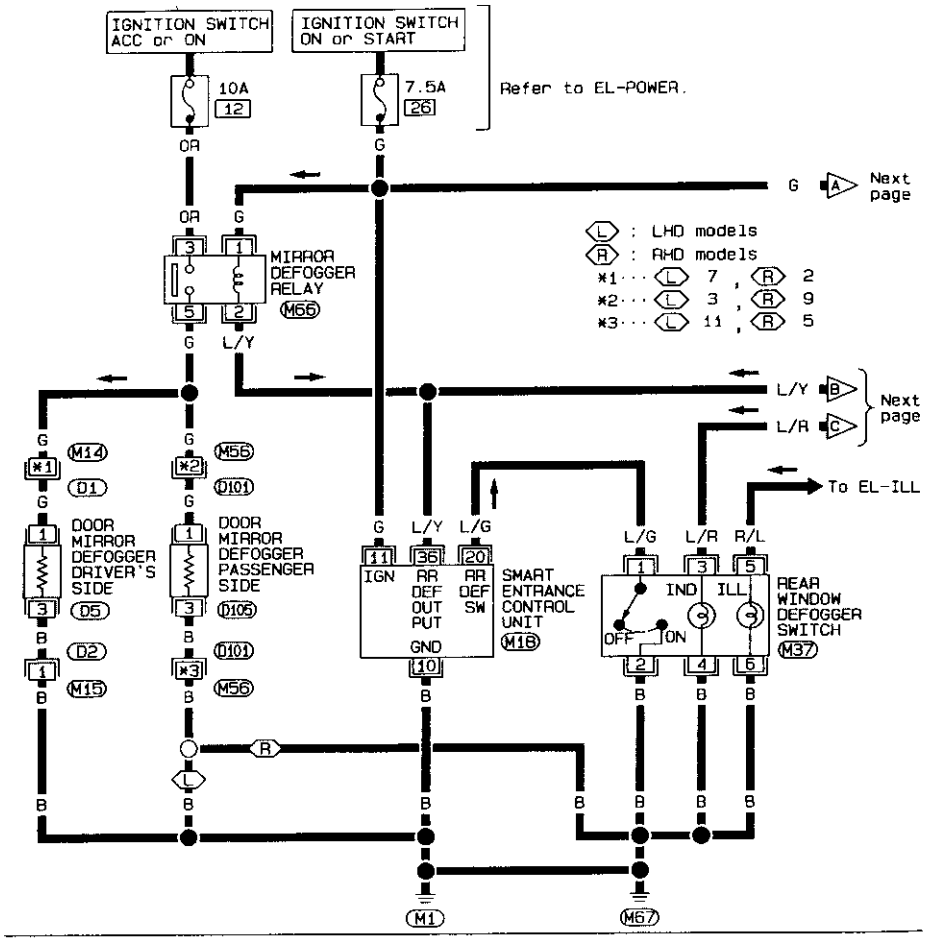

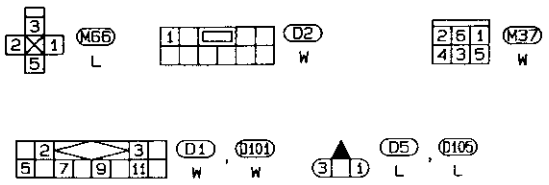

Refer to last page (Foldout page).

M18

SEL761T

Wiring Diagram — DEF — (Cont'd)

EL-DEF-02

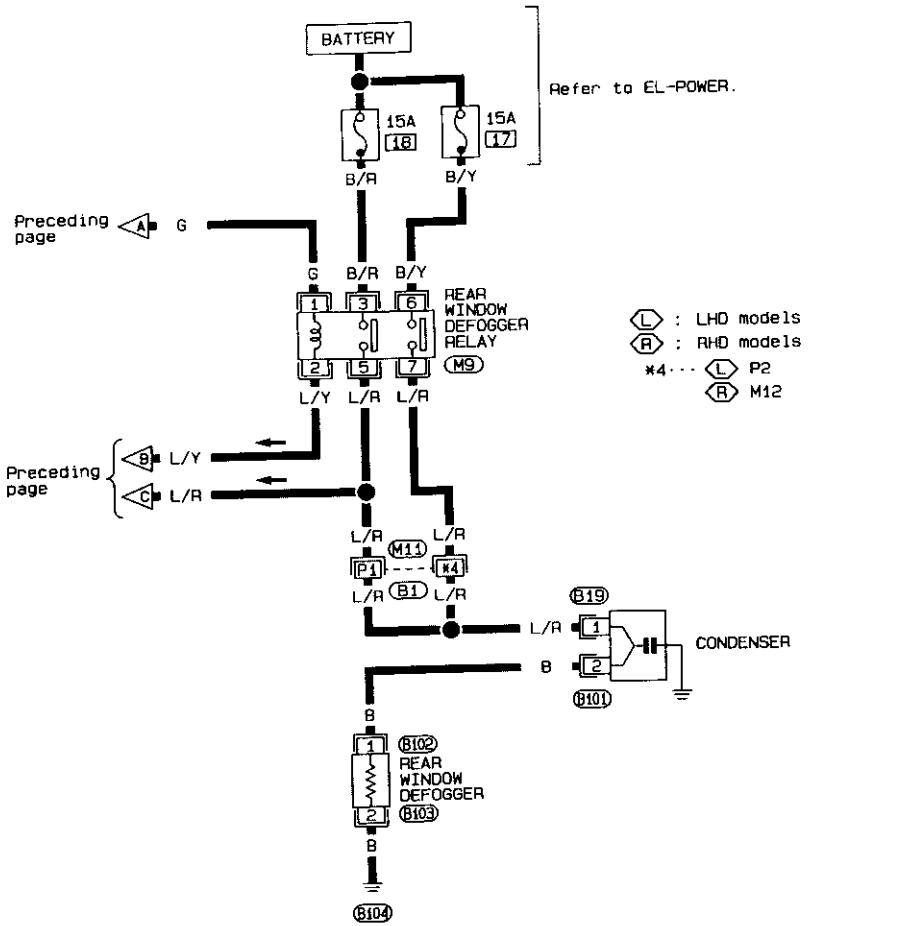

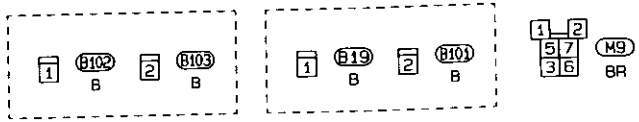

Refer to last page (Foldout page).

M11 , B1

SEL762T

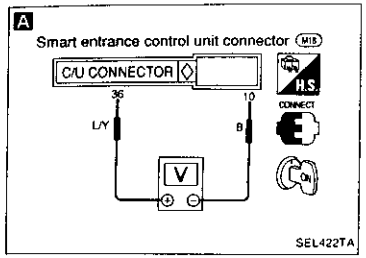

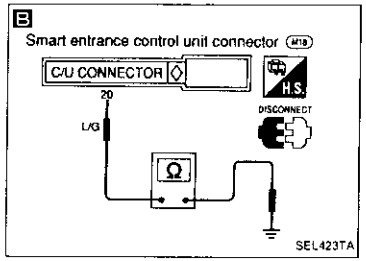

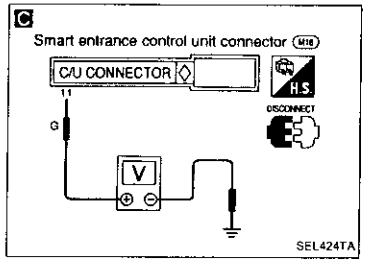

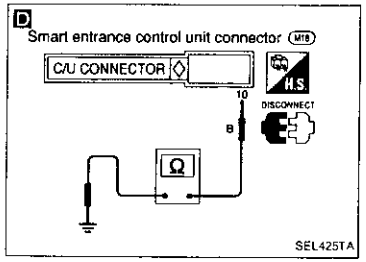

Trouble Diagnoses

DIAGNOSTIC PROCEDURE 1

SYMPTOM: Rear defogger does not activate, or does not go off after activating.

A

REAR WINDOW DEFOGGER OUTPUT SIGNAL CHECK
Measure voltage between control unit harness terminals ㉖ and ⑩.

Condition	Voltage [V]
Rear defogger switch is "OFF"	Approx. 12
Rear defogger switch is "ON"	0

OK → • Check rear window defogger relay. (Refer to EL-189.)
• Check rear window defogger circuit.
• Check rear window defogger filament. (Refer to EL-189.)

NG ↓

B

REAR WINDOW DEFOGGER SWITCH INPUT SIGNAL CHECK
Check continuity between control unit harness terminal ⑳ and body ground.

Condition of defogger switch	Continuity
Rear defogger switch is pushed.	Yes
Rear defogger switch is released.	No

NG → • Check rear window defogger switch. (Refer to EL-189.)
• Check continuity between control unit harness terminal ⑳ and rear window defogger switch harness terminal ①.
Continuity should exist.
• Check continuity between rear window defogger switch harness terminal ② and body ground.
Continuity should exist.

OK ↓

C

IGNITION INPUT SIGNAL CHECK
Check voltage between control unit harness terminal ⑪ and body ground.

Condition	Voltage [V]
Ignition switch is "ON".	Approx. 12
Ignition switch is "OFF".	0

NG → Repair harness or connectors.

OK ↓

D

CONTROL UNIT GROUND CIRCUIT CHECK
Check continuity between control unit harness terminal ⑩ and body ground.
Continuity should exist.

NG → Repair harness or connectors.

OK ↓

Replace control unit

Trouble Diagnoses (Cont'd)

ELECTRICAL COMPONENTS INSPECTION

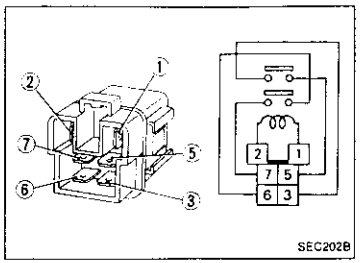

Rear window defogger relay

Check continuity between terminals ③ and ⑤, ⑥ and ⑦.

Condition	Continuity
12V direct current supply between terminals ① and ②	Yes
No current supply	No

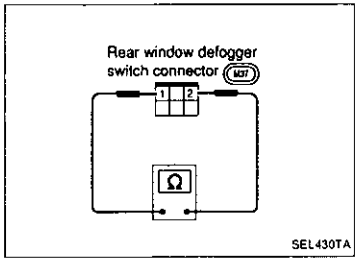

Rear window defogger switch

Check continuity between terminals when rear window defogger switch is pushed and released.

Terminals	Condition	Continuity
① - ②	Rear window defogger switch is pushed	Yes
	Rear window defogger switch is released	No

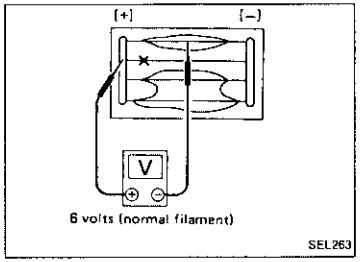

Filament Check

1. Attach probe circuit tester (in volt range) to middle portion of each filament.

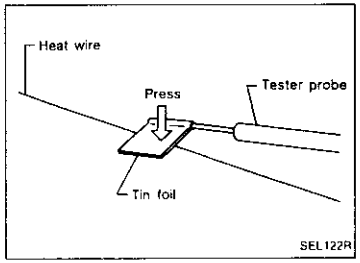

- **When measuring voltage, wrap tin foil around the top of the negative probe. Then press the foil against the wire with your finger.**

Audio/System Description

Refer to Owner's Manual for audio system operating instructions.
Power is supplied at all times
- through 7.5A fuse (No. 19 , located in the fuse block)
- to radio terminal ⑥.

With the ignition switch in the ACC or ON position, power is supplied
- through 10A fuse (No. 9 , located in the fuse block)
- to radio terminal ⑩.

Ground is supplied through the case of the radio.
When the radio power knob is pushed to the ON position, audio signals are supplied
- through radio terminals 1, 2, 3, 4, 13, 14, 15 and 16
- to the door, pillar and rear speakers.

Audio/Wiring Diagram — AUDIO —

EXCEPT CENTRAL AND SOUTH AMERICA

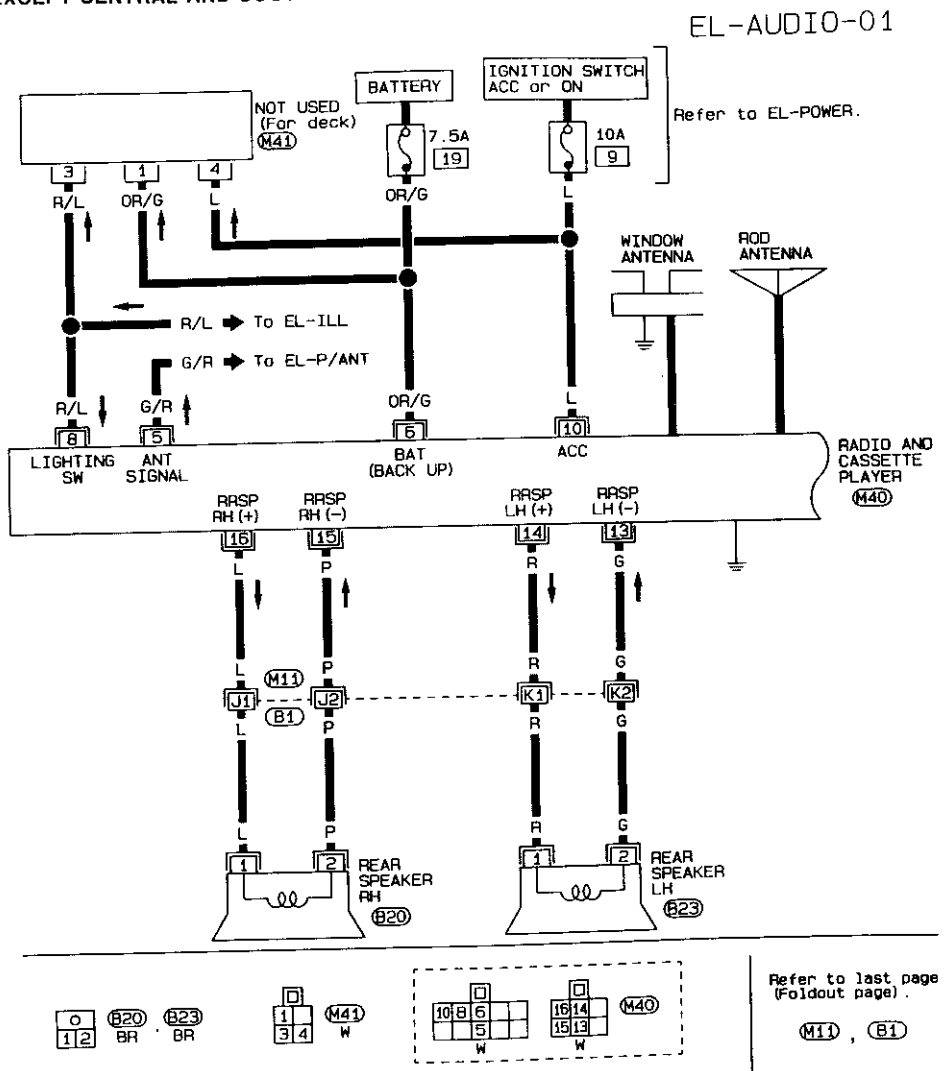

EL-AUDIO-02

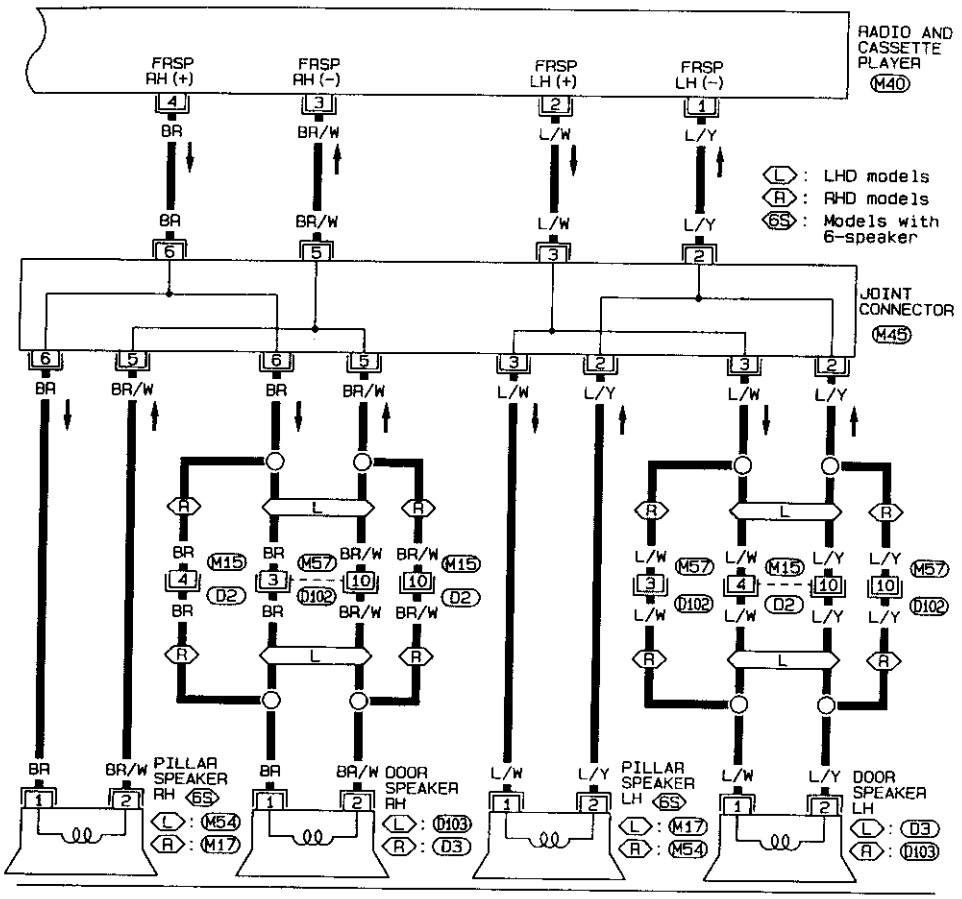

SEL764T

FOR CENTRAL AND SOUTH AMERICA

EL-AUDIO-03

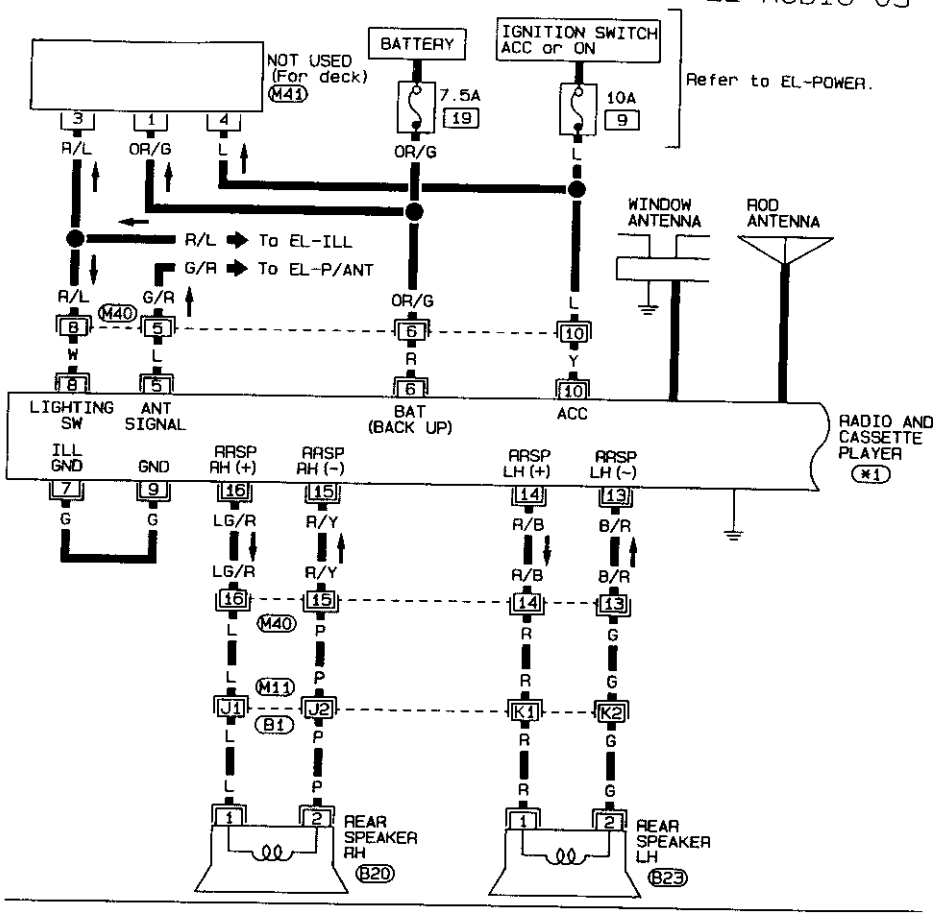

Refer to last page (Foldout page).

M11 , B1

SEL765T

Audio/Wiring Diagram — AUDIO — (Cont'd)

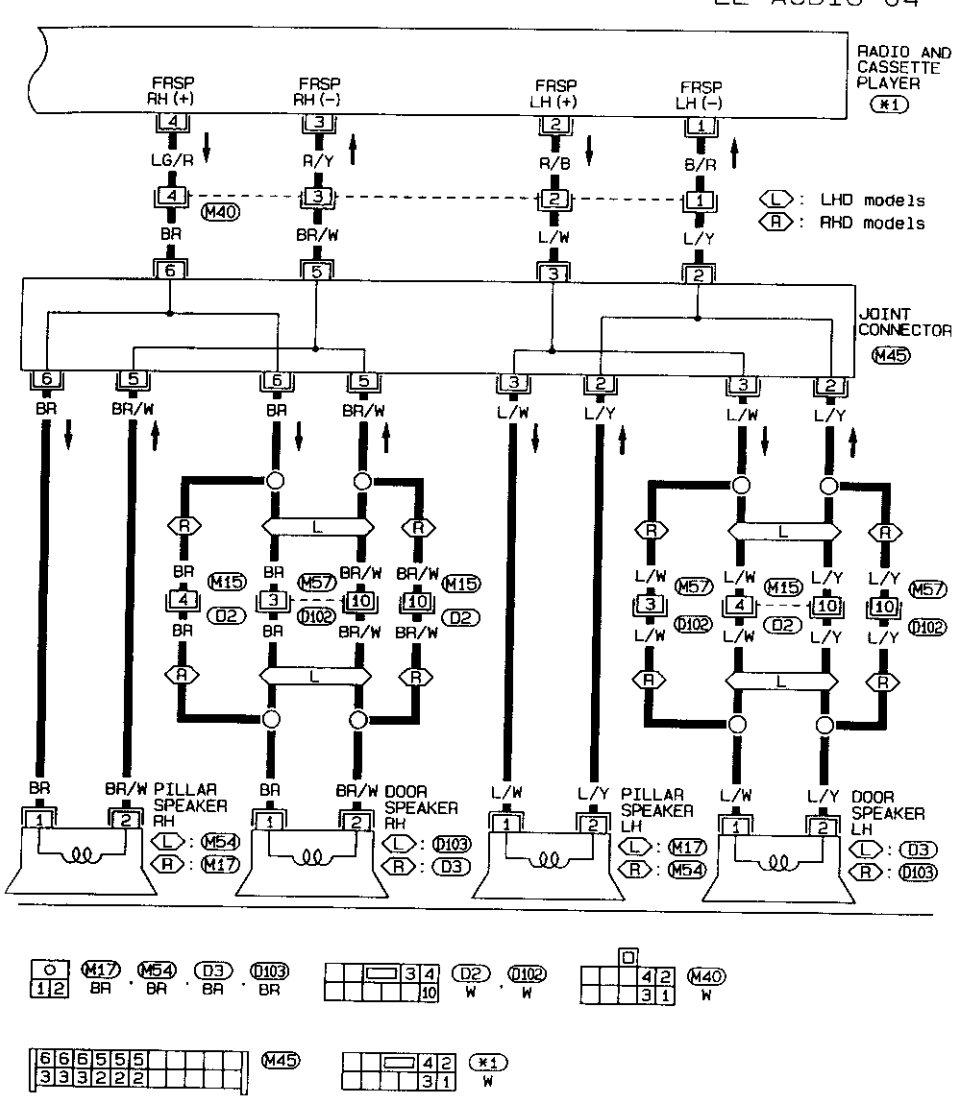

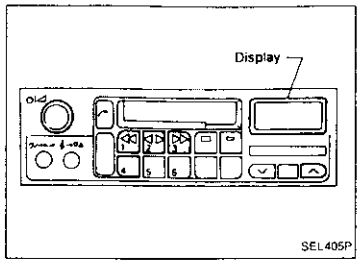

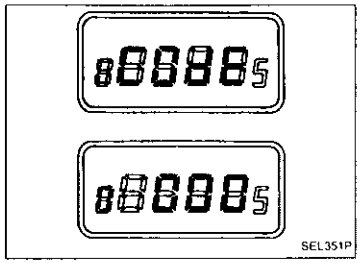

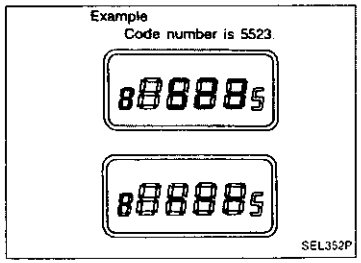

Audio

ANTI-THEFT SYSTEM

By using a personal 4-digit code known only to the vehicle owner, the possibility of the audio unit being stolen is effectively reduced, because without the code the unit can not be activated. When in normal use, the unit is unlocked and accessible in the usual way.

If however, someone attempts to remove the unit or the ground cable is disconnected from the battery, the Anti-theft system activates and the unit "locks". The only way it can be unlocked is by entering a personal code number known only by the owner.

UNLOCKING THE UNIT (How to enter a personal code number)

Use the following procedures to enter a personal code number into the radio.

1. Turn ignition switch to "ACC" or "ON".
2. Turn SW. VOL knob to "ON" and "CODE" will appear on the display.
3. Press any button (except "eject") and "0000" will appear on the display.
4. Enter a personal code number by pressing station select buttons 1, 2, 3, 4 the required number of times to display the code.
5. Press [^] to enter the code.
   Unit is unlocked and the radio/cassette will operate.
   If the wrong code number is entered, the display shows "----". Wait ten seconds then enter the correct code.

CAUTION:

There is a theft prevention mechanism restricting the number of times a wrong code number can be entered into the radio unit. If a wrong code number is entered 1 to 2 times, you will have to wait for 10 seconds before the radio will receive further input. If a wrong code number is entered 3 to 20 times, you will have to wait a duration of 15 minutes. The radio unit will lock permanently if any further attempts are made.

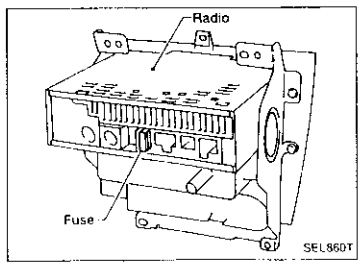

Radio Fuse Check

Power Antenna/Wiring Diagram — P/ANT —

EL-P/ANT-01

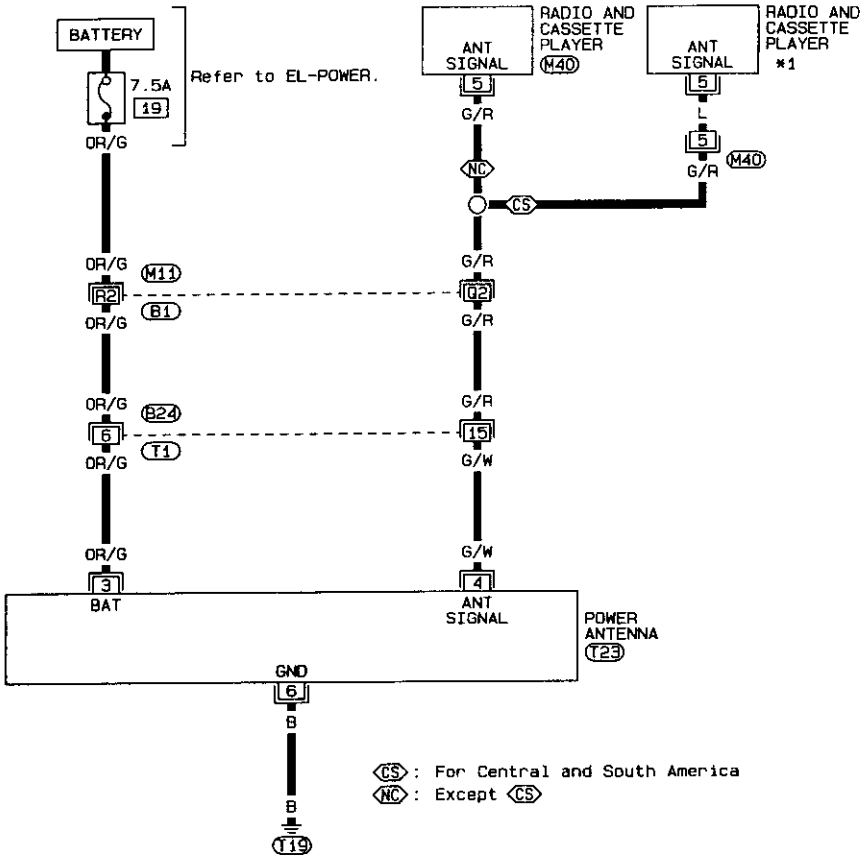

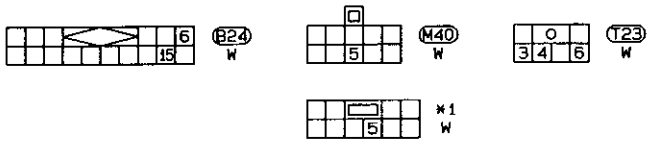

Refer to last page (Foldout page).

M11 , B1

SEL767T

Location of Antenna

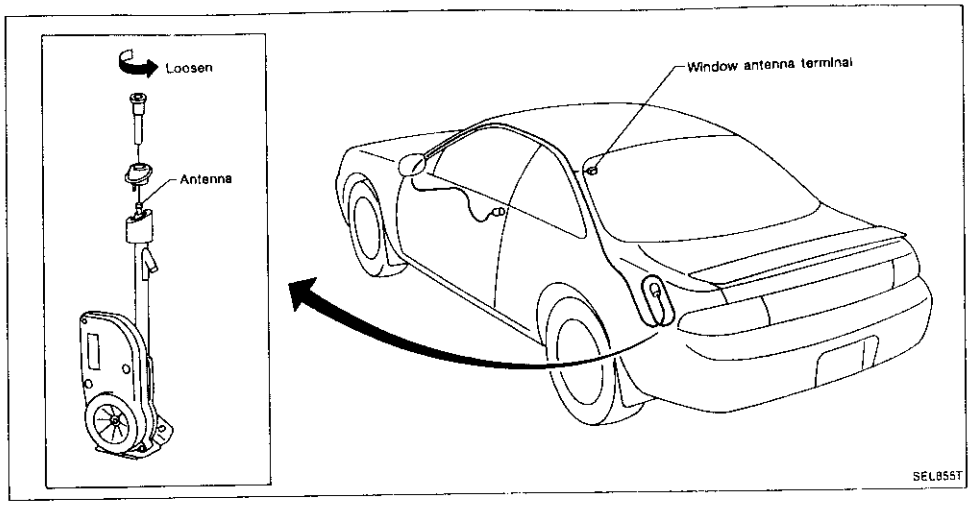

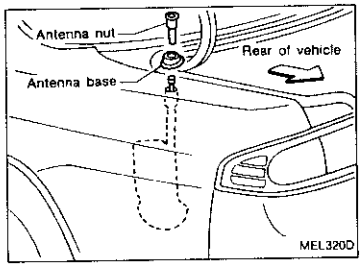

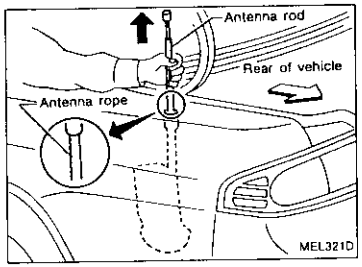

Antenna Rod Replacement

REMOVAL

1. Remove antenna nut and antenna base.
2. Withdraw antenna rod while raising it by operating antenna motor.

Antenna Rod Replacement (Cont'd)

INSTALLATION

1. Lower antenna rod by operating antenna motor.
2. Insert gear section of antenna rope into place with it facing toward antenna motor.
3. As soon as antenna rope is wound on antenna motor, stop antenna motor. Insert antenna rod lower end into antenna motor pipe.
4. Retract antenna rod completely by operating antenna motor.
5. Install antenna nut and base.

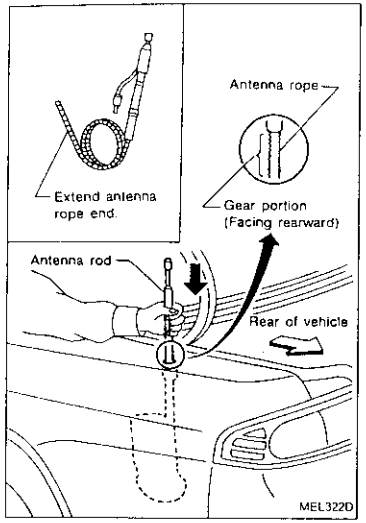

Window Antenna Repair

ELEMENT CHECK

1. Attach probe circuit tester (in ohm range) to antenna terminal on each side.

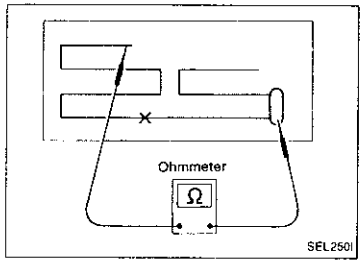

2. If an element is broken, no continuity will exist.

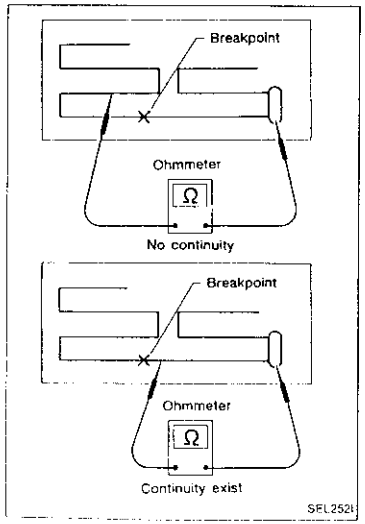

Window Antenna Repair (Cont'd)

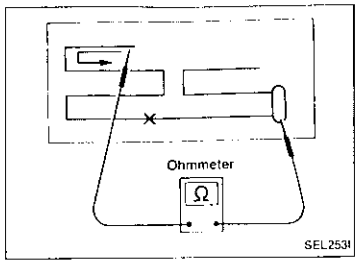

3. To locate broken point, move probe to left and right along element. Tester needle will swing abruptly when probe passes the point.

- **Refer to REAR WINDOW DEFOGGER "Filament Repair" for Element Repair.**

★ For location of heating unit, refer to "SEAT" in BT section.

Wiring Diagram — H/SEAT —

EL-H/SEAT-01

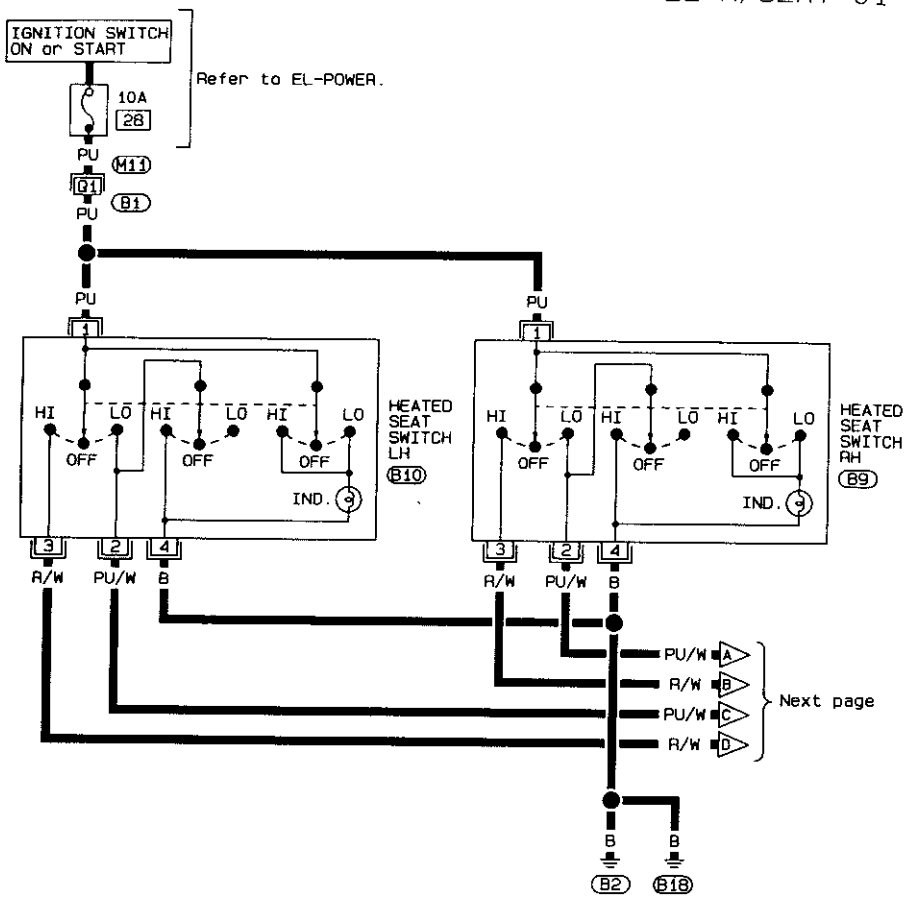

B9 , B10

3	1
4	2

W L

Refer to last page (Foldout page).

M11 , B1

SEL768T

Wiring Diagram — H/SEAT — (Cont'd)

EL-H/SEAT-02

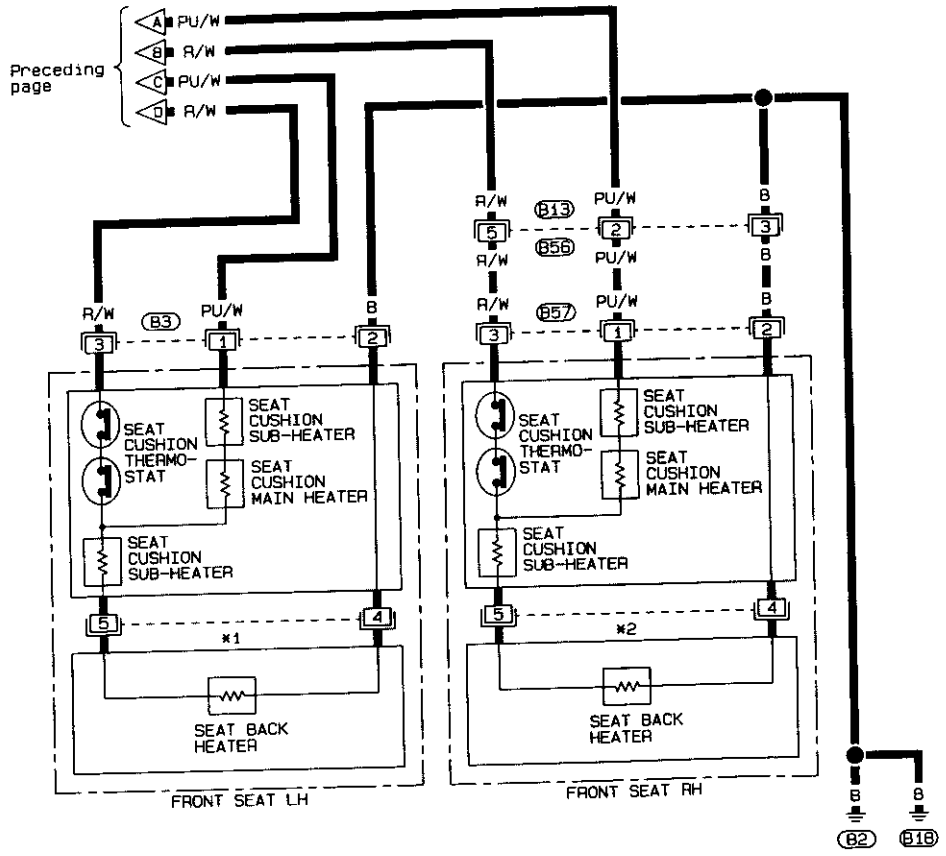

B3 , B57

1
2
3

W W

*1 , *2

4	5

L L

B13

2	3
5	

GY

SEL769T

System Description

Power is supplied at all times
- through 25A fusible link (letter [f], located in the fusible link and fuse box).
- to circuit breaker terminal ①
- through circuit breaker terminal ②
- to smart entrance control unit terminal ①.

Power is supplied at all times
- to interior lamp terminal ① and
- to key switch terminal ①
- through 10A fuse (No. [21], located in the fuse block).

Power is supplied at all times
- to multi-remote control relay-1 terminal ①
- through 10A fuse (No. [22], located in the fuse block).

Terminal ⑩ of the smart entrance control unit is grounded through body ground (M1).

INPUTS

When the key switch is ON (ignition key is inserted in key cylinder), power is supplied
- through key switch terminal ②
- to smart entrance control unit terminal ㉔.

When the driver side door switch is OPEN, ground is supplied
- to smart entrance control unit terminal ⑮
- through driver side door switch terminal ①
- to driver side door switch terminal ③
- through body ground (B2) or (B18).

When the passenger side door switch is OPEN, ground is supplied
- to smart entrance control unit terminal ⑯
- through passenger side door switch body ground.

When the driver side door lock actuator (door unlock sensor) is UNLOCKED, ground is supplied
- to smart entrance control unit terminal ⑫
- through driver side door lock actuator (door unlock sensor) terminal ④
- to driver side door lock actuator (door unlock sensor) terminal ②
- through body ground (M1).

When the passenger side door lock actuator (door unlock sensor) is UNLOCKED, ground is supplied
- to smart entrance control unit terminal ⑬
- through passenger side door lock actuator (door unlock sensor) terminal ④
- to passenger side door lock actuator (door unlock sensor) terminal ②
- through body ground (M67).

Remote controller signal input
- through window antenna
- to smart entrance control unit terminal ㊲.

The multi-remote control system controls operation of the
- power door lock
- interior lamp
- panic alarm
- hazard warning lamp
- ID code entry.

OPERATED PROCEDURE

Power door lock operation

When the following input signals are both supplied:
- key switch OFF (when ignition key is not inserted in key cylinder);
- door switch CLOSED (when all the doors are closed);

smart entrance control unit locks all the doors with input of LOCK signal from remote controller.
When key switch is OFF (when ignition key is not inserted in key cylinder), smart entrance control unit unlocks the doors with input of UNLOCK signal from remote controller.
For details of current flow, refer to "POWER DOOR LOCK".

System Description (Cont'd)

Interior lamp operation

When the following input signals are both supplied:
- key switch OFF (when ignition key is not inserted in key cylinder);
- door switch CLOSED (when all the doors are closed);

multi-remote control system turns on interior lamp (for 30 seconds) with input of UNLOCK signal from remote controller.
For detailed description, refer to "Interior, Spot and Trunk Room Lamps".

Panic alarm operation

When key switch is OFF (when ignition key is not inserted in key cylinder), multi-remote control system turns on and off horn and hazard warning lamp intermittently with input of PANIC ALARM signal from remote controller.
For detailed description, refer to "THEFT WARNING SYSTEM".

Hazard warning lamp operation

When the following input signals are all supplied:
- key switch OFF (when ignition key is not inserted in key cylinder);
- door switch CLOSED (when all the doors are closed);
- door lock actuator (door unlock sensor) LOCKED (when all the doors are locked);

multi-remote control system outputs two times the following ground signals with input of LOCK signal from remote controller:
- to multi-remote control relay-1 terminal ②;
- through smart entrance control unit terminal ⑦.

As a result, multi-remote control relay-1 is energized, and hazard warning lamps flash on and off.
For detailed description, refer to "Turn Signal and Hazard Warning Lamps" and "THEFT WARNING SYSTEM".

Component Parts and Harness Connector Location

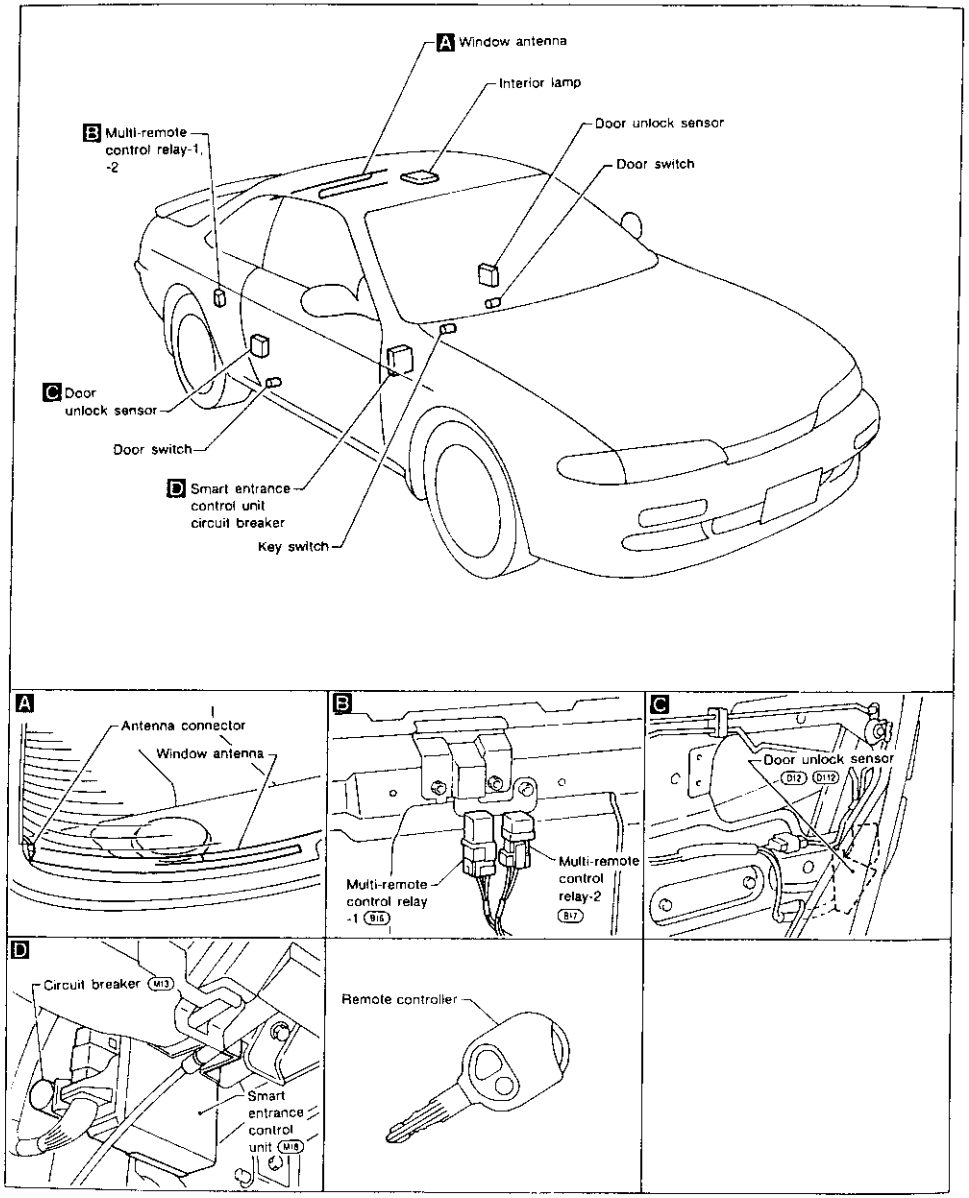

SEL859T

Schematic

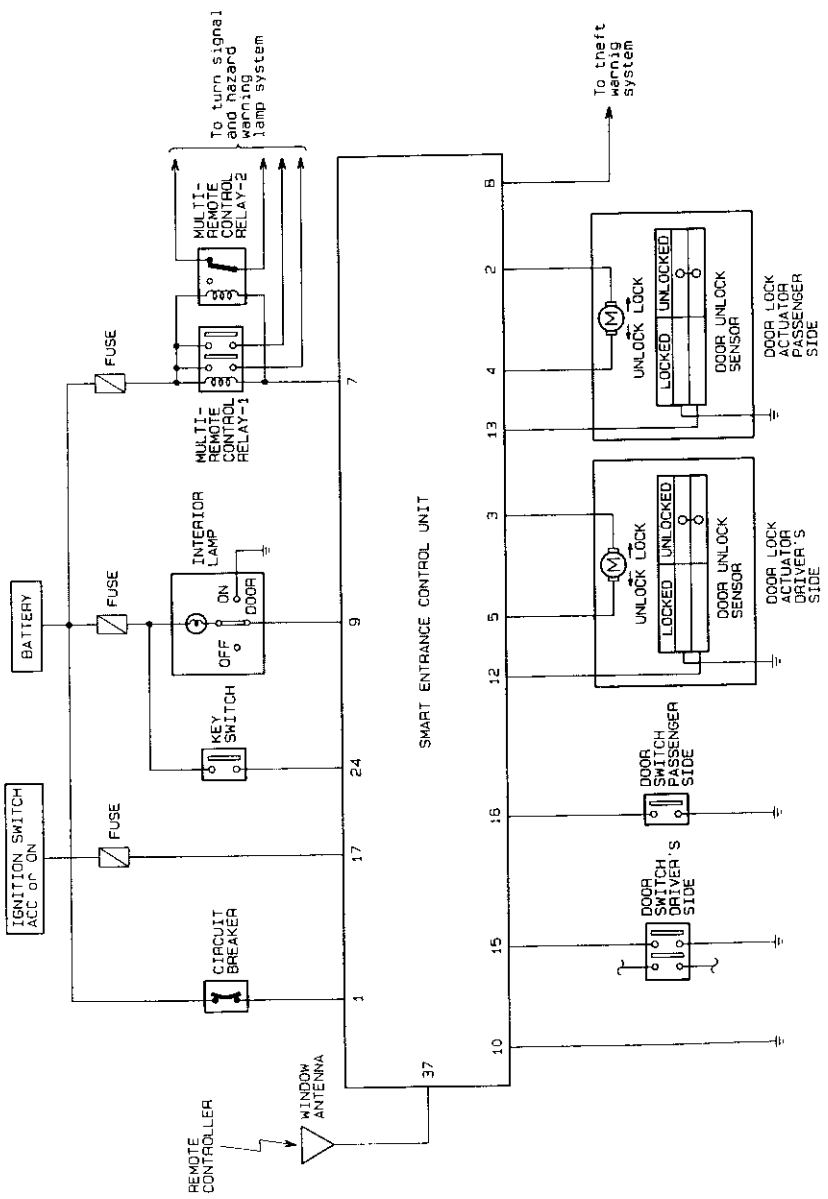

SEL774T

Wiring Diagram — MULTI —

EL-MULTI-01

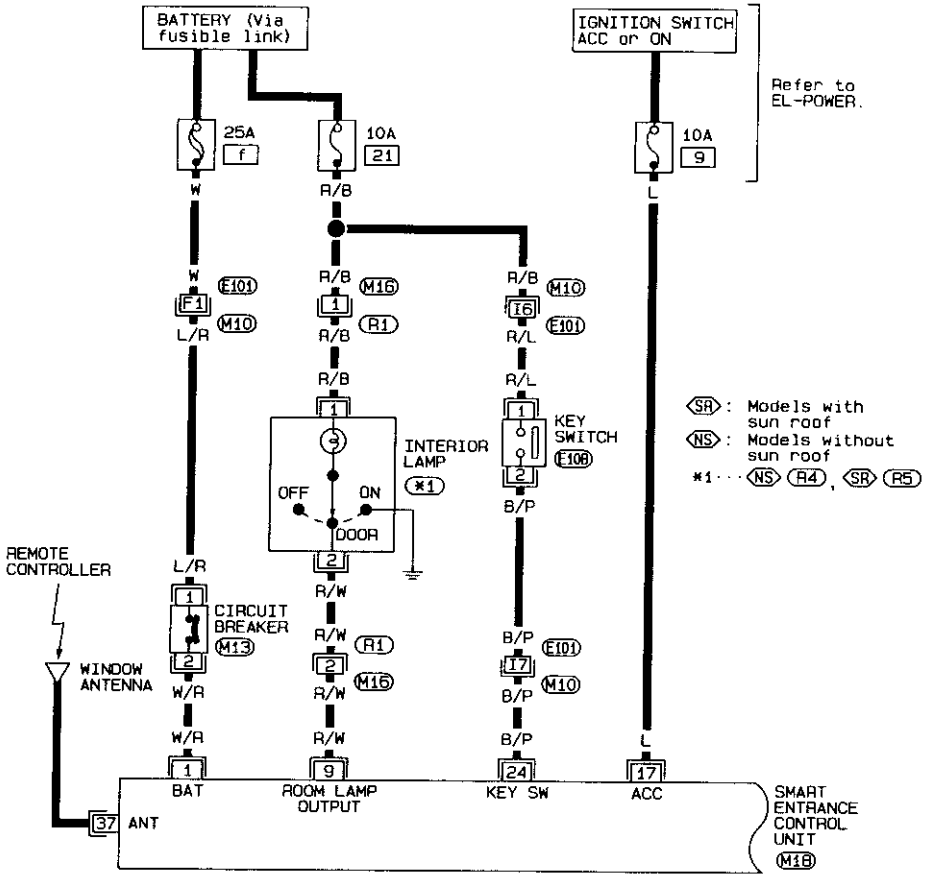

1 2 M13 W

1 2 R1 W

1 2 R4, R5 W, W

1 2 E108 W

Refer to last page (Foldout page).

M10, E101

M18

SEL770T

Wiring Diagram — MULTI — (Cont'd)

EL-MULTI-02

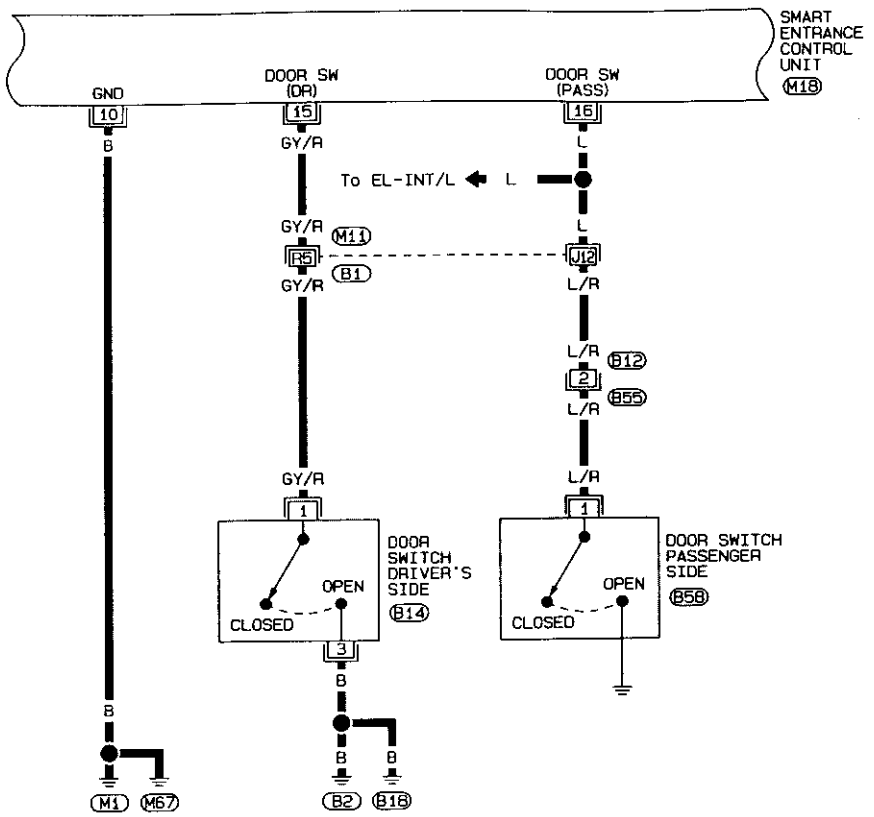

1 3 B14 B

1 B58 BR

2 B55 GY

Refer to last page (Foldout page).

M11, B1

M18

SEL771T

EL-MULTI-03

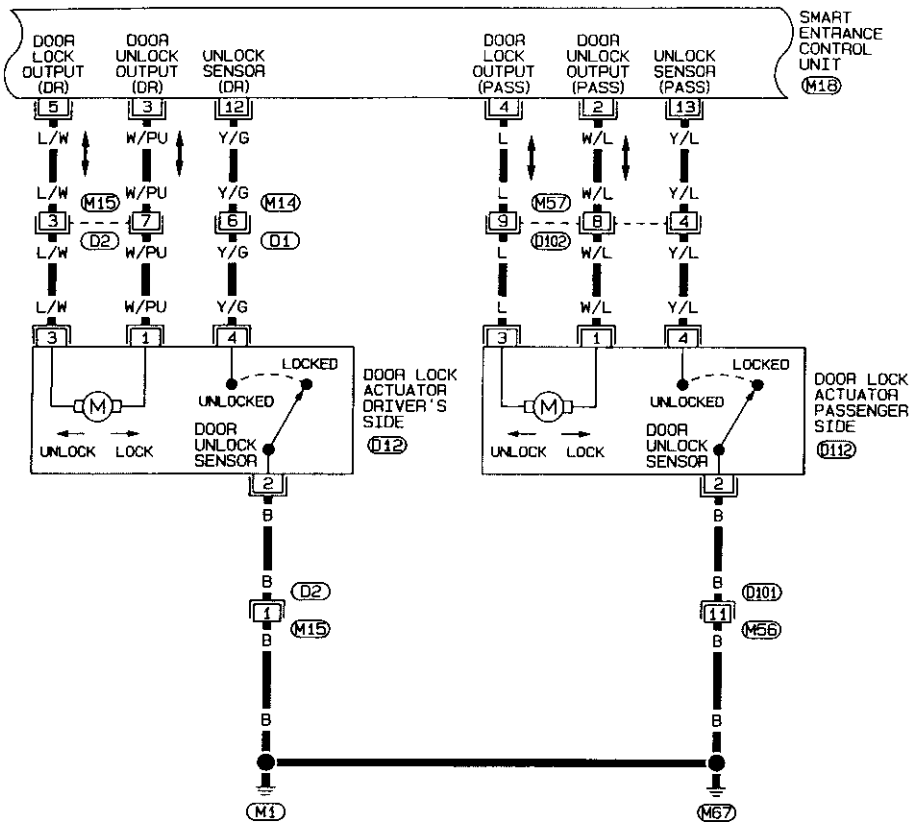

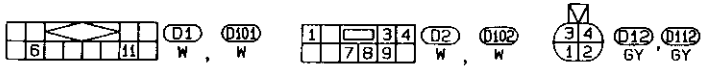

Refer to last page (Foldout page).

M18

SEL772T

EL-MULTI-04

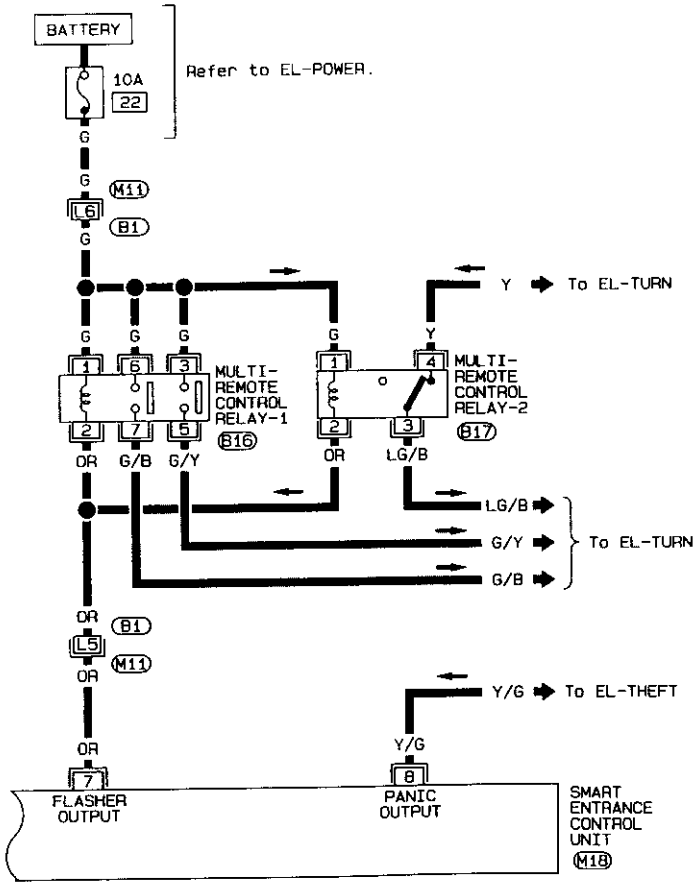

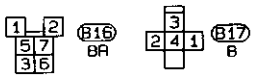

Refer to last page (Foldout page).

M11, B1

M18

SEL773T

Input/Output Operation Signal

SMART ENTRANCE CONTROL UNIT

Terminal No.	Connections	Operated condition		Voltage (V) (Approximate values)
1	Power source (C/B)	—		12V
2	Passenger door lock motor	When door unlock signal is received from remote controller or unlock sensor	Unlocked	12V
3	Driver door lock motor		Free	1V or less
4	Passenger door lock motor	When door lock signal is received from remote controller or unlock sensor	Locked	12V
5	Driver's door lock motor		Free	1V or less
7	Multi-remote control relay 1	When doors are locked using remote controller or panic alarm is operated using remote controller		12V → 1V or less
8	Theft warning horn relay	When panic alarm is operated using remote controller		12V → 1V or less
9	Interior lamp	When doors are unlocked using remote controller. (Lamp switch in "DOOR" position)		12V → 1V or less
10	Ground	—		—
11	Ignition switch (ON)	"ON" or "START" position		12V
12	Driver door unlock sensor	Driver door: Locked → Unlocked		12V → 4.5V or less
13	Passenger door unlock sensor	Passenger door: Locked → Unlocked		12V → 4.5V or less
15	Driver door switch	OFF (Closed) → ON (Open)		12V → 4.5V or less
16	Passenger door switch	OFF (Closed) → ON (Open)		12V → 1.5V or less
17	Ignition switch (ACC)	"ACC" or "ON" position		12V
24	Ignition key switch (Insert)	IGN key inserted → IGN key removed from IGN key cylinder		12V → 4.5V or less
37	Multi-remote antenna	—		—

Trouble Diagnoses

TROUBLE SYMPTOM

- All functions of remote control system do not operate.

CHECK REMOTE CONTROLLER BATTERY.
Refer to DIAGNOSTIC PROCEDURE 1.
NG → Replace battery.
OK ↓
Go to DIAGNOSTIC PROCEDURE 2.
OK ↓
Replace the multi-remote controller.

- Some functions of multi-remote controller do not operate.

① DOOR LOCK OR UNLOCK DOES NOT FUNCTION.
(Pressing lock or unlock button of remote controller normally locks or unlocks all doors.)
→ Go to DIAGNOSTIC PROCEDURE 3.

OR

② HAZARD WARNING LAMPS DO NOT FLASH TWICE WHEN PRESSING LOCK BUTTON OF REMOTE CONTROLLER.
• Check if hazard warning lamps flash with hazard switch.
If check is OK, Go to DIAGNOSTIC PROCEDURE 4.
If check is NG → Check "Hazard warning lamp" circuit.

OR

③ INTERIOR LAMP DOES NOT TURN ON FOR 30 SECONDS WHEN PRESSING UNLOCK BUTTON OF REMOTE CONTROLLER.
• Check if the interior lamp switch is in the "door" position, the lamp illuminates when a door is open.
If check is OK, Go to DIAGNOSTIC PROCEDURE 5.
If check is NG → Check "Interior lamp" circuit.

OR

④ PANIC ALARM (HORN AND HAZARD WARNING LAMP) DOES NOT ACTIVATE WHEN PANIC ALARM BUTTON IS CONTINUOUSLY PRESSED FOR MORE THAN 1.5 SECONDS.
• Check if horn and hazard warning lamp activate when test is conducted as follows:
1. Open the driver's window.
2. Close all doors. Wait for about 30 seconds to make sure that the lighted "SECURITY" warning lamp begins to blink.
3. Lock doors with door key inserted into key cylinder.
4. Manually unlock with driver's door lock knob, then panic alarm should activate. (The alarm will stop when door is locked and unlocked with the key.)

If check is NG → Check "THEFT WARNING" system.

OK ↓
Enter the identity (ID) code of another remote controller and recheck operation to see if the same trouble as indicated above occurs
OK → Check multi-remote controller operation again.
If necessary, replace Smart Entrance Control Unit.
NG ↓
Replace the multi-remote controller.

Note: The multi-remote control system does not activate with the ignition key inserted in the ignition key cylinder.

Trouble Diagnoses (Cont'd)

DIAGNOSTIC PROCEDURE 1

Check remote controller battery.

A

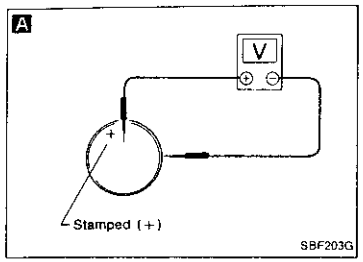

CHECK REMOTE CONTROLLER BATTERY.

Remove battery and measure voltage across battery positive and negative terminals ⊕ and ⊖.

Measuring terminal		Standard value
⊕	⊖	
Battery positive terminal ⊕	Battery negative terminal ⊖	3V or more

Note:
Remote controller does not function if battery is not set correctly.

DIAGNOSTIC PROCEDURE 2

SYMPTOM: All remote controls do not function even if remote controller is operated properly.

A

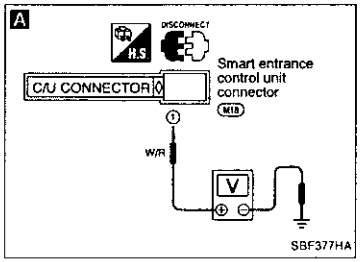

CHECK MAIN POWER SUPPLY AND GROUND CIRCUIT.
1) Remove key from ignition.
2) Disconnect connector from control unit. Check voltage across control unit terminal ① and GND.
Does battery voltage exist?

No → Check the following.
- Fuse
- Circuit breaker
- Power supply harness

Yes ↓

B

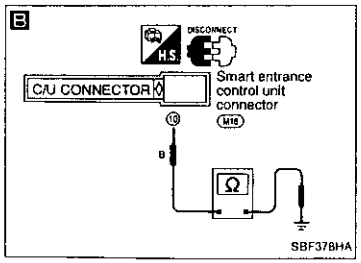

Check continuity between terminal ⑩ and GND.
Does continuity exist?

No → Check GND harness.

Yes ↓

C

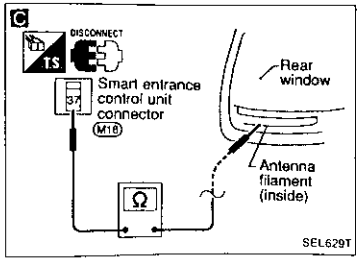

CHECK ANTENNA CIRCUIT.
Disconnect 1-pin connector from control unit.
Check continuity between a terminal and filament on the rear window.
Does continuity exist?

No → Check antenna circuit. (Refer to REAR WINDOW DEFOGGER "Filament Repair".)

Yes ↓

Ⓐ

(Go to next page)

Trouble Diagnoses (Cont'd)

D

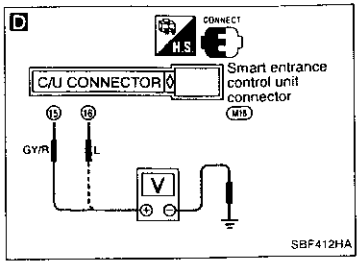

E

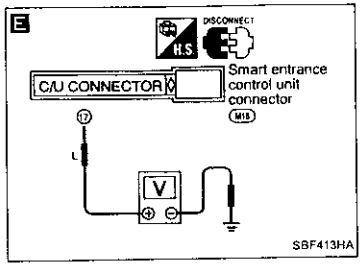

Ⓐ ↓

D

CHECK DOOR SWITCH CIRCUIT.
1) Close all doors.
2) Connect control unit connector.
3) Check voltage across control unit terminal ⑮ and GND, ⑯ and GND.
Does battery voltage exist?

No → Replace smart entrance control unit.

Yes ↓

D

1) Open all doors.
2) Check voltage across control unit terminal ⑮ and GND, ⑯ and GND.
Is voltage approx. 0V?

No → Check door switch circuit.

Yes ↓

E

CHECK IGNITION SWITCH "ACC" CIRCUIT.
Disconnect connector from control unit.
Check voltage across control unit terminal ⑰ and GND while ignition switch is "ACC".
Does battery voltage exist?

No → Check ignition switch "ACC" circuit.

Yes ↓

Check operation parts in multi-remote control system for function.

Trouble Diagnoses (Cont'd)

DIAGNOSTIC PROCEDURE 3

SYMPTOM: Door lock or unlock on remote control does not function.

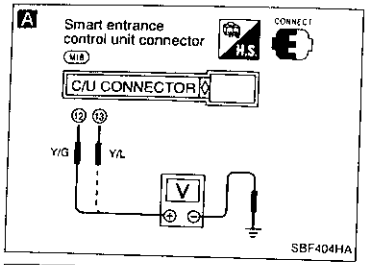

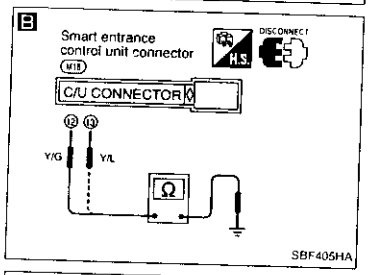

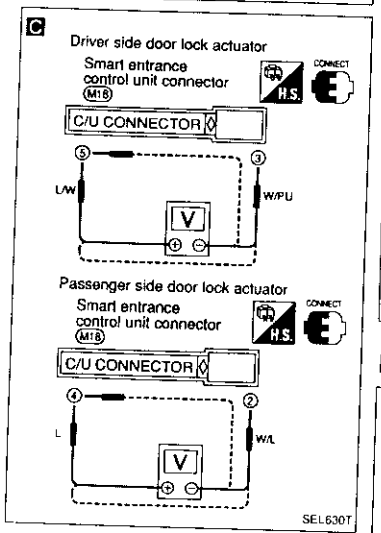

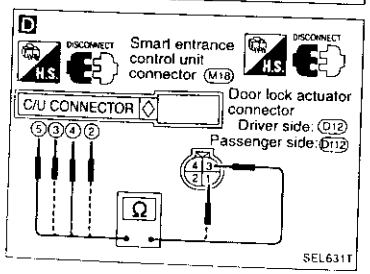

A

CHECK UNLOCK SENSOR CIRCUIT.
Check voltage across control unit terminal ⑫ and GND, ⑬ and GND.

Door lock knob condition		Terminals	Voltage (V)
Locked → Unlocked → Locked	Driver	⑫ - GND	12 → 0 → 12
	Passenger	⑬ - GND	

NG → **B**

OK → **C**

B

1) Disconnect connector from control unit.
2) Check continuity between ⑫ and GND, ⑬ and GND.

Door lock knob condition	Terminals
Unlocked	⑫ - GND
	⑬ - GND

Does continuity exist?

No → Replace smart entrance control unit.

Yes → Repair unlock sensor harness or replace door lock actuator.

C

CHECK DOOR LOCK ACTUATOR CIRCUIT.
Check voltage for door lock motor.
Door lock actuator driver side:

Door lock knob condition	Terminals ⊕	Terminals ⊖
Locked	⑤	③
Unlocked	③	⑤

Door lock actuator passenger side:

Door lock knob condition	Terminals ⊕	Terminals ⊖
Locked	④	②
Unlocked	②	④

Does battery voltage exist?

No → Replace smart entrance control unit.

Yes → **D**

D

1) Disconnect control unit connector and door lock actuator connector.
2) Check continuity

	Terminals
Driver side	⑤ - ③
	③ - ①
Passenger side	④ - ③
	② - ①

Does continuity exist?

No → Repair harness.

Yes → Check power door lock motor. Refer to "ELECTRICAL COMPONENTS INSPECTION" in "POWER DOOR LOCK" (EL-174)

Trouble Diagnoses (Cont'd)

DIAGNOSTIC PROCEDURE 4

SYMPTOM: Hazard warning lamps do not flash twice when pressing lock button of remote controller. Everything else functions.

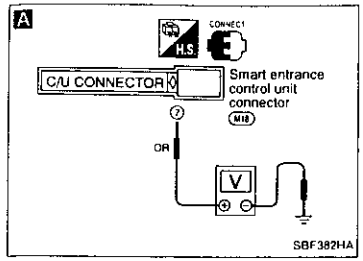

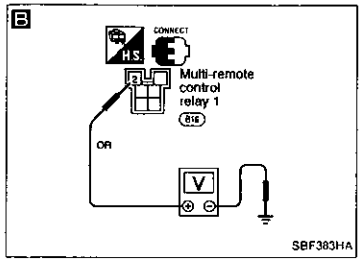

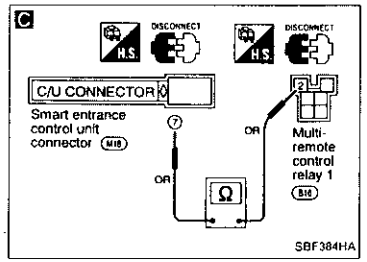

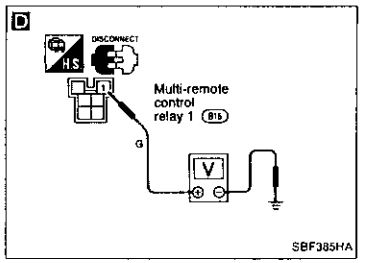

A

CHECK HAZARD WARNING LAMP FLASHING CIRCUIT.
Check voltage across control unit terminal ⑦ and GND.
Does battery voltage exist?

Yes → Ⓐ (Go to next page.)

No → **B**

B

Check voltage across multi-remote control relay 1 terminal ② and GND.
Does battery voltage exist?

Yes → **C**

No

C

1. Disconnect connectors from control unit and multi-remote control relay 1.
2. Check continuity between terminal ⑦ of control unit connector and ② of multi-remote control relay 1.

Does continuity exist?

No → Repair harness between control unit connector and multi-remote control relay 1 connector.

Yes → Check system again.

D

Disconnect connector from multi-remote control relay 1.
Check voltage across multi-remote control relay 1 terminal ① and GND.
Does battery voltage exist?

No → Repair power supply harness for multi-remote control relay 1.

Yes → Replace multi-remote control relay 1

Trouble Diagnoses (Cont'd)

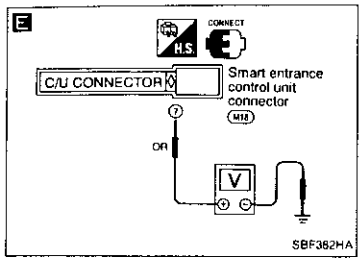

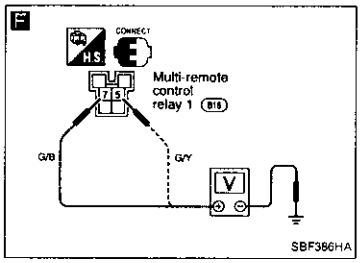

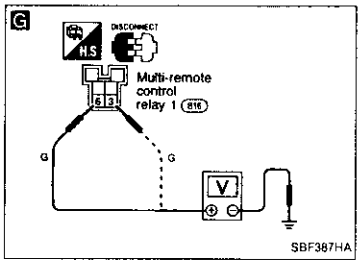

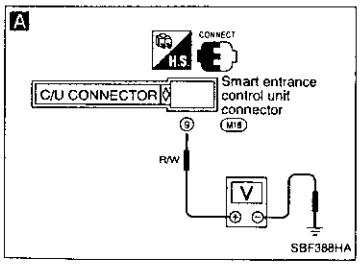

Ⓐ

E

Push lock button of remote controller and check voltage across control unit terminal ⑦ and GND.
Is voltage approx. 0V?

No → Replace smart entrance control unit.

Yes

F

Push lock button of remote controller and check voltage across multi-remote control relay 1 terminal ⑤ and GND, ⑦ and GND.
Does battery voltage exist?

Yes → Repair hazard switch circuit harness.

No

G

Disconnect connector from multi-remote control relay 1.
Check voltage across multi-remote control relay terminal ③ and GND, ⑥ and GND.
Does battery voltage exist?

No → Repair power supply harness.

Yes

Replace multi-remote control relay 1.

DIAGNOSTIC PROCEDURE 5

SYMPTOM: Interior lamp does not turn on for 30 seconds when pressing unlock button of remote controller. Everything else functions.

A

CHECK INTERIOR LAMP CIRCUIT.
When interior lamp switch is "DOOR" position, check voltage across control unit terminal ⑨ and GND.
Does battery voltage exist?

No → Repair harness between control unit connector and interior lamp connector.

Yes

A

Push unlock button of remote controller and check voltage across control unit terminal ⑨ and GND.
Is voltage approx. 0V?

No → Replace smart entrance control unit.

Yes

Check system again

Replacing Remote Controller or Control Unit

If the remote controller or the control unit needs to be replaced or if an additional remote controller needs to be set, enter the identity (ID) code manually.

ID Code Entry Procedure

To enter the ID code, follow this procedure.

"Setting mode":

Three steps must be followed to establish the "setting mode".

(1) Close and lock all doors.
(2) Insert and remove the key from the ignition more than six times within 10 seconds. (The hazard warning lamp will then flash twice.)

- **At this time, the original ID codes are eliminated.**

ID code entry:

(3) Turn ignition key to "ACC" position.
(4) Push lock button on the new remote controller once (for example, if door is locked using the remote controller during this ID code entry enable state, a new ID code can be entered).

- **At this time, the new ID code is entered. (The hazard warning lamp will then flash twice.)**

(5) If you need to enter additional remote controllers (including the original), release the driver's door lock, then lock again with door lock knob.
(6) Push lock button on the new additional remote controller once.
(7) This ID code entry enable state and setting mode remain until the driver's door is opened.

NOTE

- **If the same ID code that existing in the memory is input, the entry is canceled, and no ID code will be entered.**
- **Entry of maximum four ID codes is allowed and any attempt to enter more will be ignored.**
- **Any ID codes entered after termination of the "setting" mode will not be accepted. Additionally remote control signals will be inhibited when an ID code has not been entered during the "setting" mode.**

System Description

Refer to Owner's Manual for theft warning system operating instructions.
Power is supplied at all times
- through 30A fusible link (letter [h], located in the fusible link and fuse box)
- to ignition switch terminal ①.

With the ignition switch in the START position, power is supplied
- from terminal ⑤ of the ignition switch
- to theft warning relay terminal ③.

Power is supplied at all times
- through 7.5A fuse (No. [19], located in the fuse block)
- to security indicator lamp terminal ②.

Power is supplied at all times
- through 25A fusible link (letter [f], located in the fusible link and fuse box)
- to circuit breaker terminal ①
- through circuit breaker terminal ②
- to smart entrance control unit terminal ①.

With the ignition switch in the ACC or ON position, power is supplied
- through 10A fuse (No. [9], located in the fuse block)
- to smart entrance control unit terminal ⑰.

With the ignition switch in the ON or START position, power is supplied
- through 7.5A fuse (No. [26], located in the fuse block)
- to smart entrance control unit terminal ⑪ and
- to theft warning relay terminal ①.

Ground is supplied
- to smart entrance control unit terminal ⑱
- through body ground (M1).

THEFT WARNING SYSTEM ACTIVATION (Without key or remote controller used to lock doors)

The operation of the theft warning system is controlled by the doors, hood and trunk lid.
To activate the theft warning system, the ignition switch must be in the OFF position and the smart entrance control unit must receive signals indicating the doors, hood and trunk are closed and the doors are locked.
When a door is open, smart entrance control unit terminal ⑮ or ⑯ receives a ground signal from driver side or passenger side door switch.
When a door is unlocked, smart entrance control unit terminal ⑫ or ⑬ receives a ground signal
- from terminal ④ of the driver side door unlock sensor
- from terminal ④ of the passenger side door unlock sensor
- through body ground (M1) or (M67) for the doors.

When the hood is open, smart entrance control unit terminal ㉙ receives a ground signal
- from terminal ② of the hood switch
- through body ground (E43).

When the trunk lid is open, smart entrance control unit terminal ㉘ receives a ground signal
- from terminal ① of the trunk room lamp switch
- through body ground (T15).

If none of the described conditions exist, the theft warning system will activate automatically.

THEFT WARNING SYSTEM ACTIVATION (With key or remote controller used to lock doors)

If the key or remote controller is used to lock doors, terminal ㉚ receives a ground signal
- from terminal ② of the driver side key cylinder switch and
- from terminal ① of the passenger side door key cylinder switch
- through body grounds (M1) and (M67).

If this signal is received by the smart entrance control unit, the theft warning system will activate automatically.
Once the theft warning system has been activated, smart entrance control unit terminal ㉝ supplies ground to terminal ① of the security indicator lamp.
The security lamp will illuminate for approximately 30 seconds and then go on and off

System Description (Cont'd)

THEFT WARNING SYSTEM OPERATION

The theft warning system is triggered by
- opening a door or the trunk lid without using the key
- opening the hood
- tampering with the key cylinder in the door.

Once the theft warning system has been activated, if the smart entrance control unit receives a ground signal at terminal ⑮, ⑯, ㉖ or ㉙ (as described under THEFT WARNING SYSTEM ACTIVATION), the theft warning system will be triggered. Also, when a door key tamper signal is received at the smart entrance control unit, the system will be triggered. The hazard warning lamps flash and the horns sound intermittently, and the starting system is interrupted.
When a door key cylinder switch has been tampered with, smart entrance control unit terminal ㉘ receives a ground signal
- from terminal ③ of each door's key cylinder switch
- through body ground (M1) or (M67).

If the theft warning system is triggered, ground is supplied
- from terminal ㉜ of the smart entrance control unit
- to theft warning relay terminal ②.

With power and ground supplied, power to the inhibitor switch (A/T models) or starter motor (M/T models) is interrupted. The starter motor will not crank and the engine will not start.
Power is supplied at all times
- through 7.5A fuse (No. [43], located in the fusible link and fuse box)
- to theft warning horn relay terminals ① and ⑥.

Power is supplied at all times
- through 10A fuse (No. [39], located in the fusible link and fuse box)
- to theft warning horn relay terminal ③.

Power is supplied at all times
- through 10A fuse (No. [22], located in the fuse block)
- to multi-remote control relay-1 terminals ①, ③ and ⑥.

When the theft warning system is triggered, ground is supplied intermittently
- from terminal ⑧ of the smart entrance control unit
- to theft warning horn relay terminal ② and
- to multi-remote control relay-1 terminal ②.

The hazard warning lamps flash and the horns sound intermittently.
The alarm automatically turns off after approximately 30 seconds but will reactivate if the vehicle is tampered with again.

THEFT WARNING SYSTEM DEACTIVATION

To deactivate the theft warning system, a door or the trunk lid must be unlocked with the key or remote controller.
When the key or remote controller is used to unlock a door, smart entrance control unit terminal ㉛ receives a ground signal
- from terminal ① of the driver side door key cylinder switch
- from terminal ② of the passenger side door key cylinder switch.

When the key is used to unlock the trunk lid, smart entrance control unit terminal ㉗ receives a ground signal from terminal ① of the trunk key cylinder switch.
When the smart entrance control unit receives either one of these signals, the theft warning system is deactivated.

PANIC ALARM OPERATION

Multi-remote control system may or may not operate theft warning system (horns and hazard warning lamps) as required.
When the multi-remote control system is triggered, ground is supplied intermittently.
- from smart entrance control unit terminal ⑧
- to theft warning horn relay terminal ② and
- from smart entrance control unit terminal ⑦
- to multi-remote control relay-1 terminal ②.

System Description (Cont'd)

he hazard warning lamps flash and the horns sound intermittently.
he alarm automatically turns off after 30 seconds or when smart entrance control unit receives any ignal from multi-remote controller.

Component Parts and Harness Connector Location

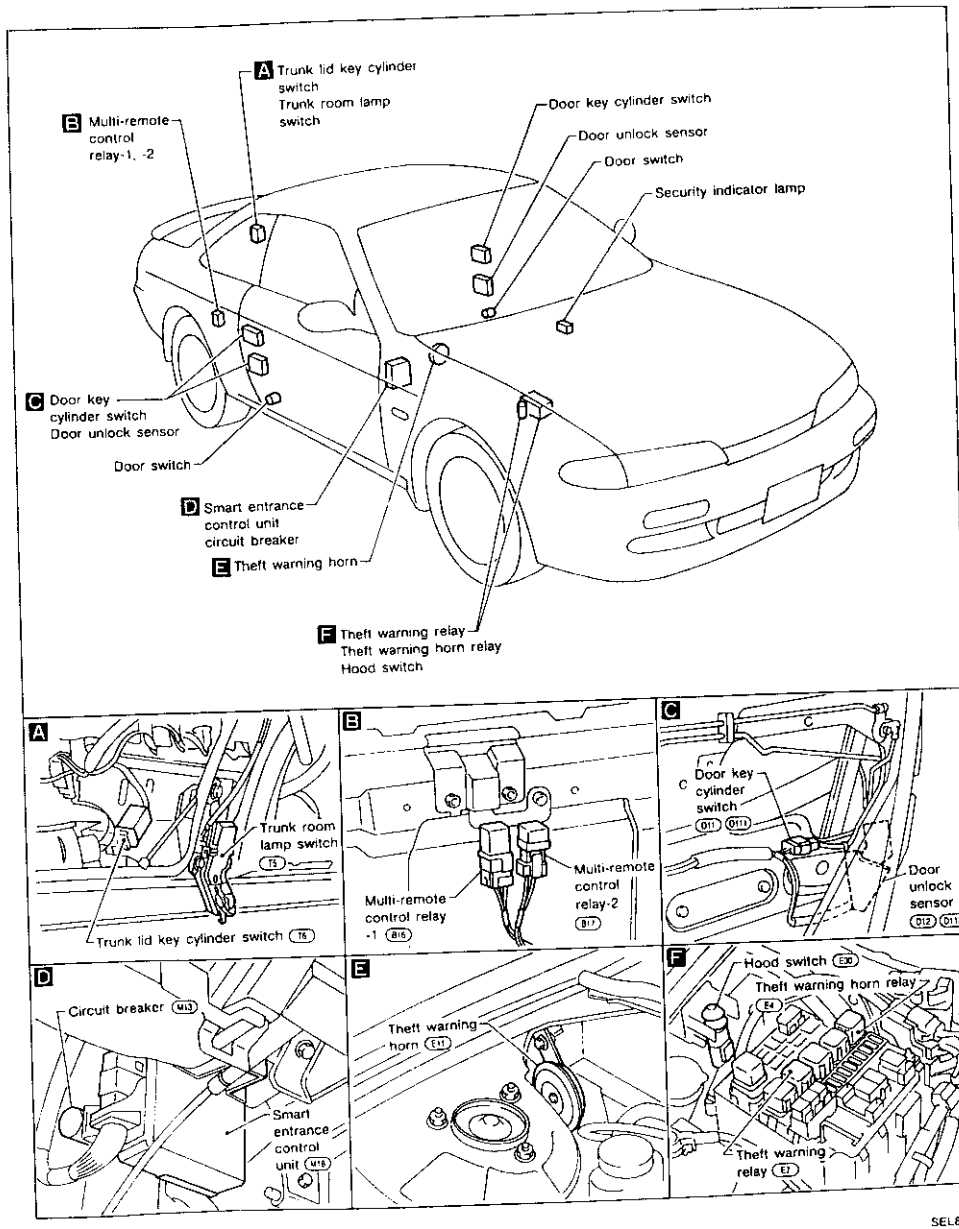

SEL856T

Schematic

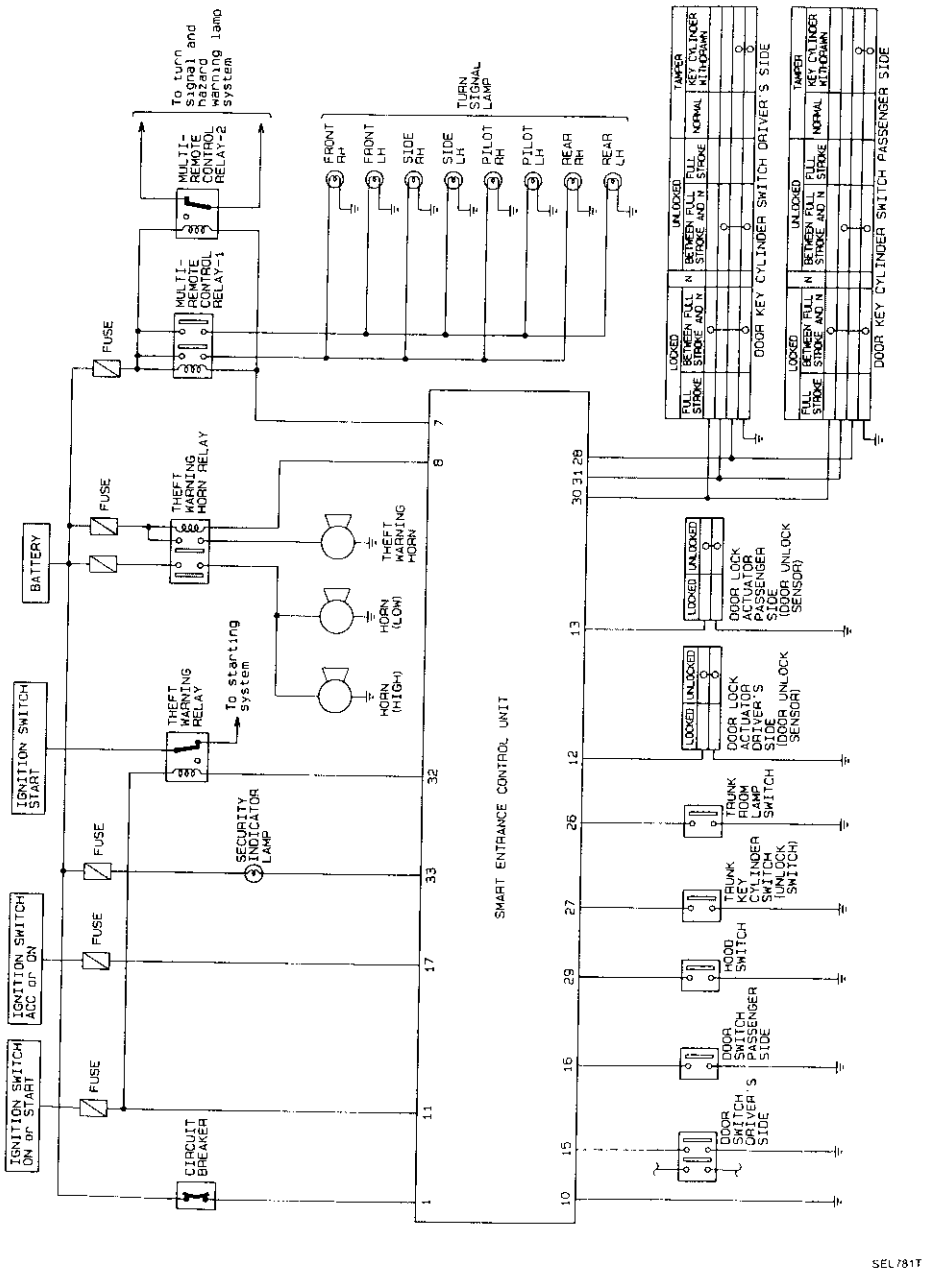

SEL781T

Wiring Diagram — THEFT —

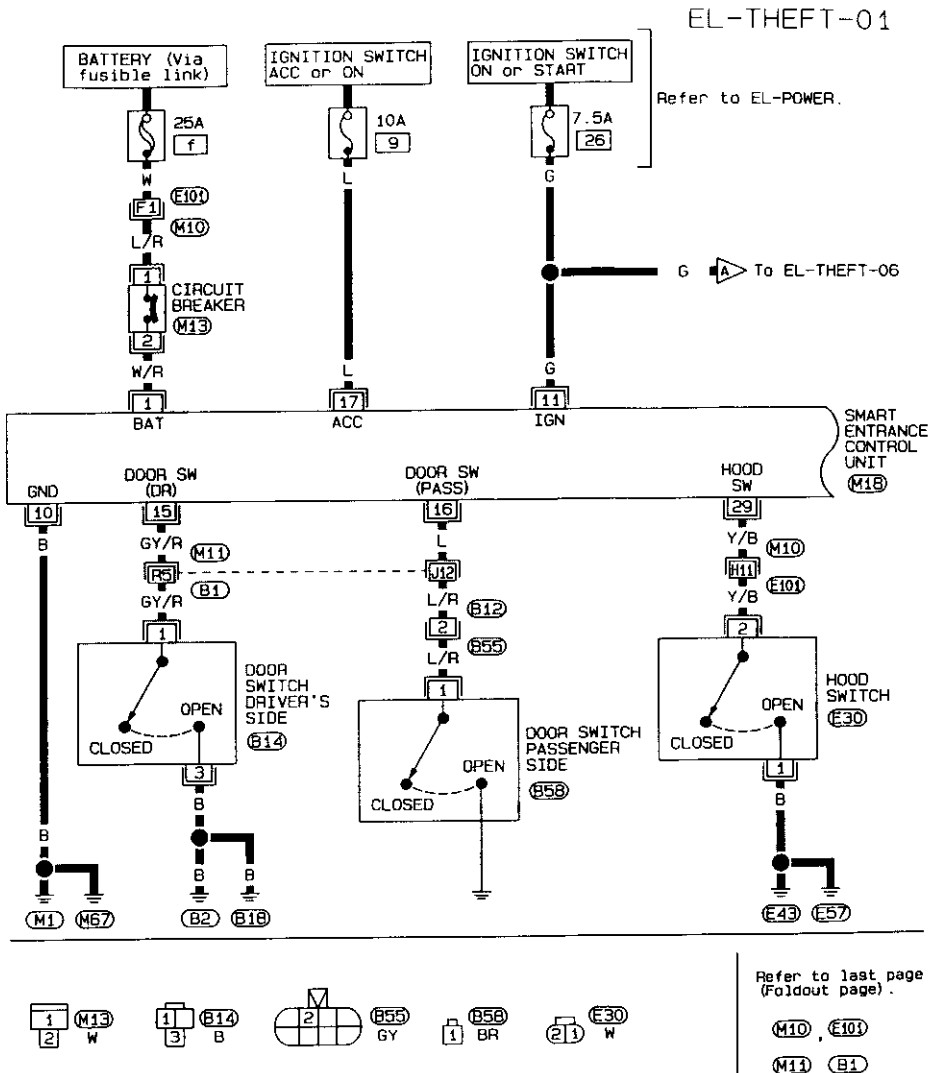

SEL775T

Wiring Diagram — THEFT — (Cont'd)

EL-THEFT-02

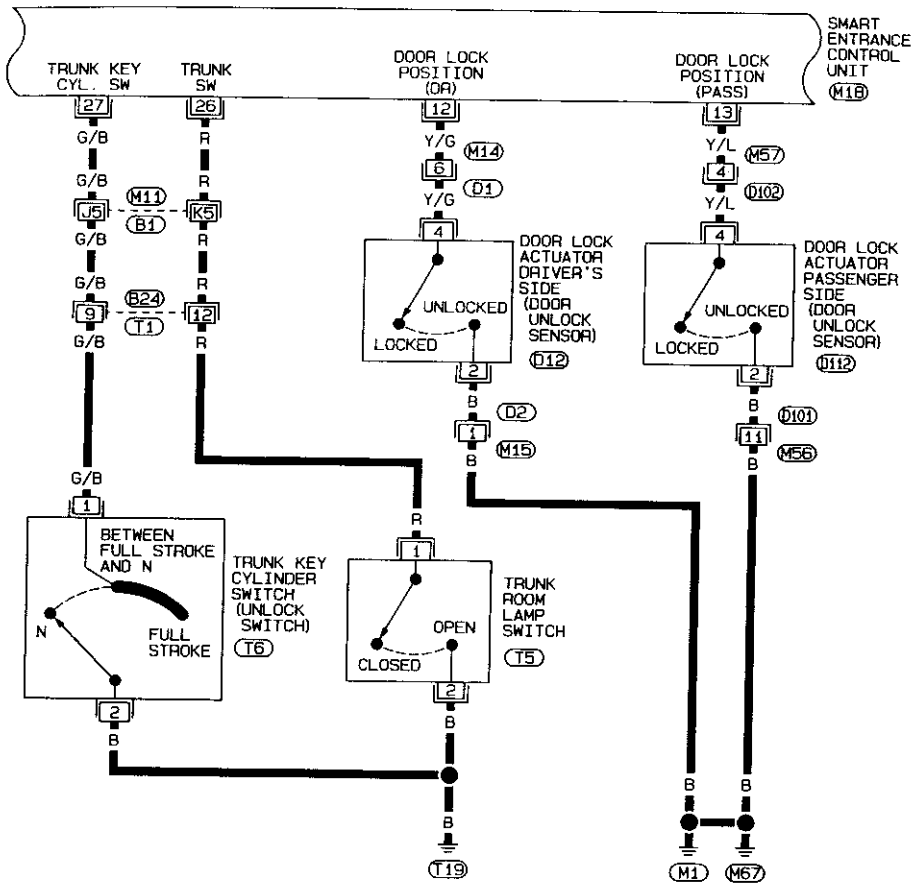

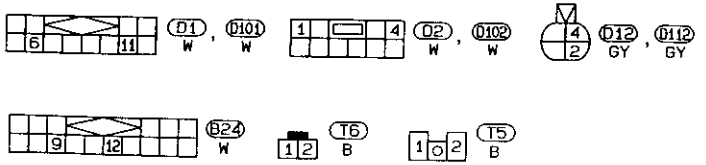

Refer to last page (Foldout page).

M11, B1

M18

SEL776T

Wiring Diagram — THEFT — (Cont'd)

EL-THEFT-03

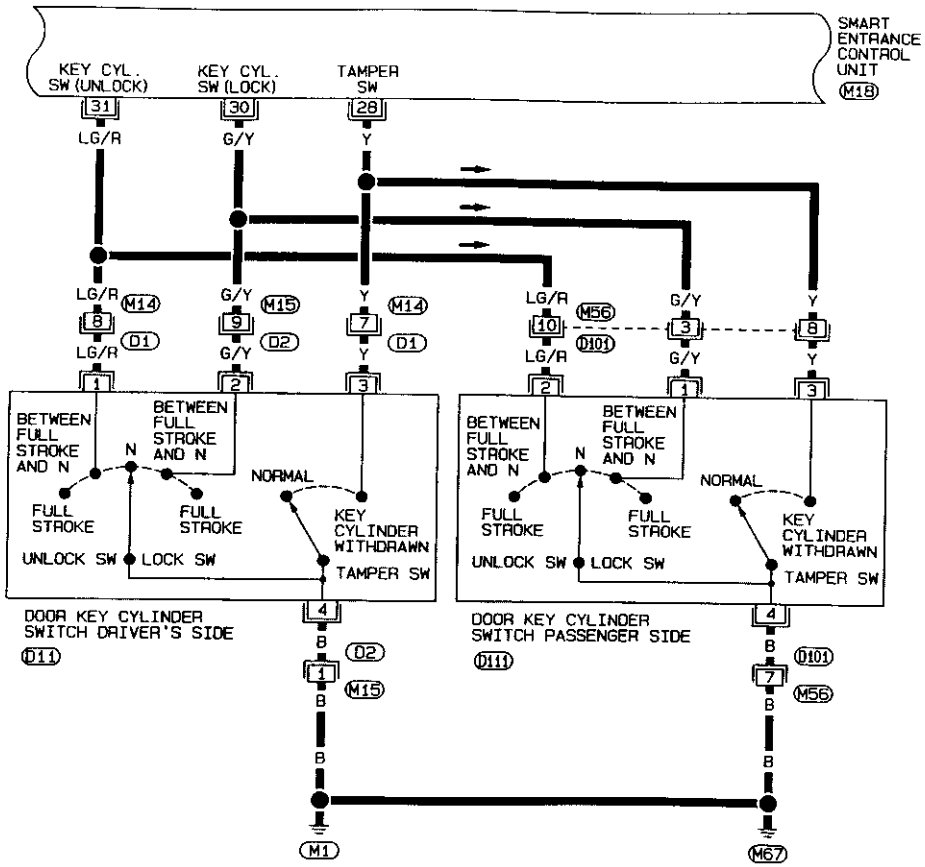

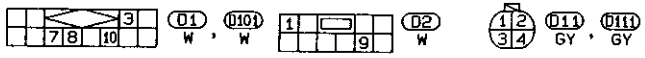

Refer to last page (Foldout page).

M18

SEL777T

Wiring Diagram — THEFT — (Cont'd)

EL-THEFT-04

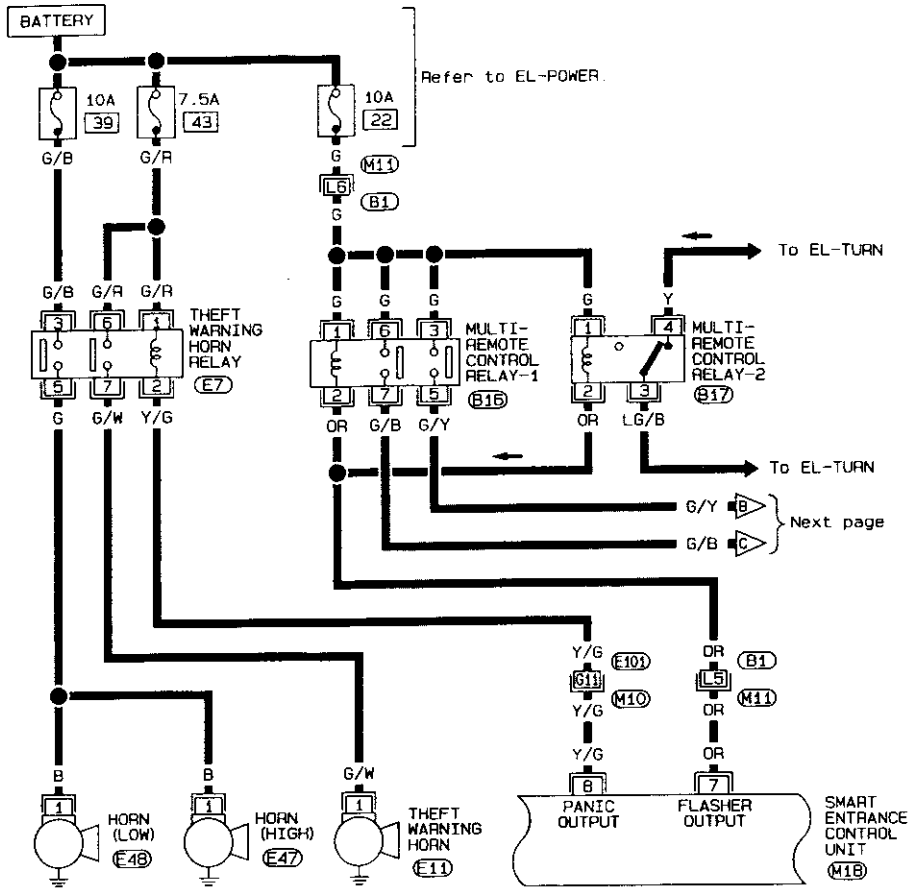

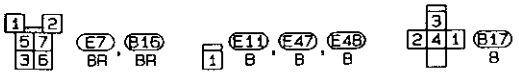

Refer to last page (Foldout page).

(M10), (E101)

(M11), (B1)

(M18)

SEL778T

Wiring Diagram — THEFT — (Cont'd)

EL-THEFT-05

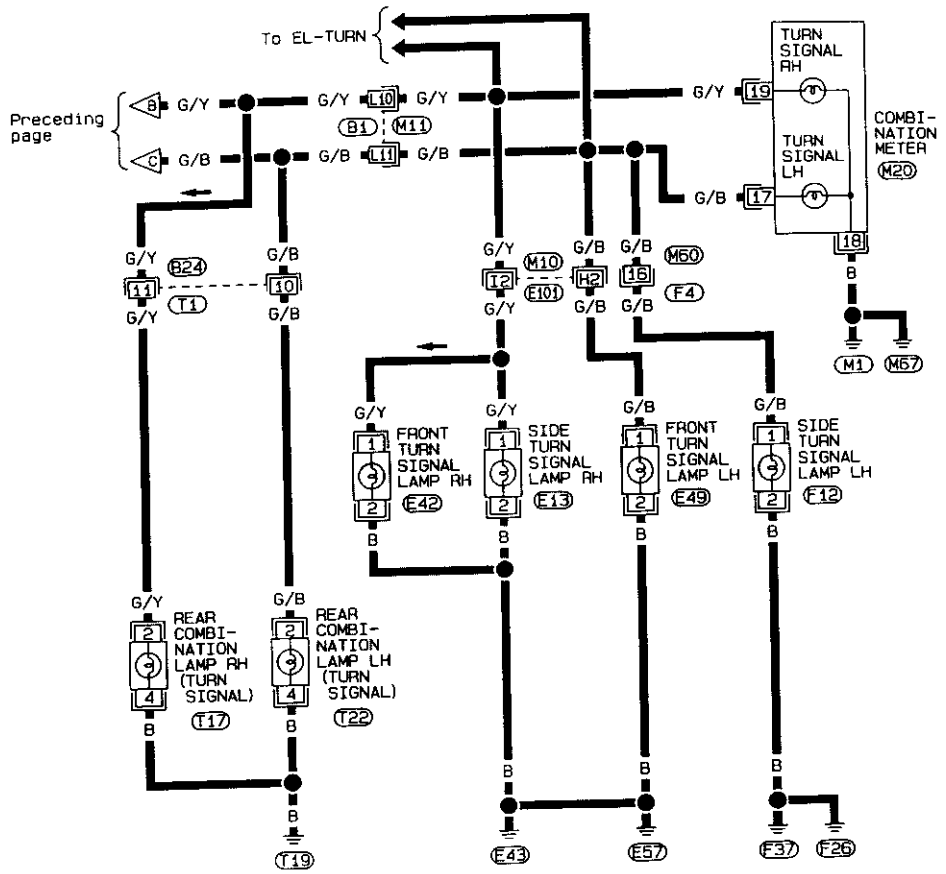

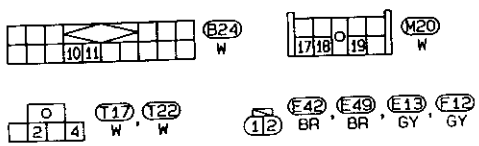

Refer to last page (Foldout page).

(M10), (E101)

(M11), (B1)

(M60), (F4)

SEL779T

Wiring Diagram — THEFT — (Cont'd)

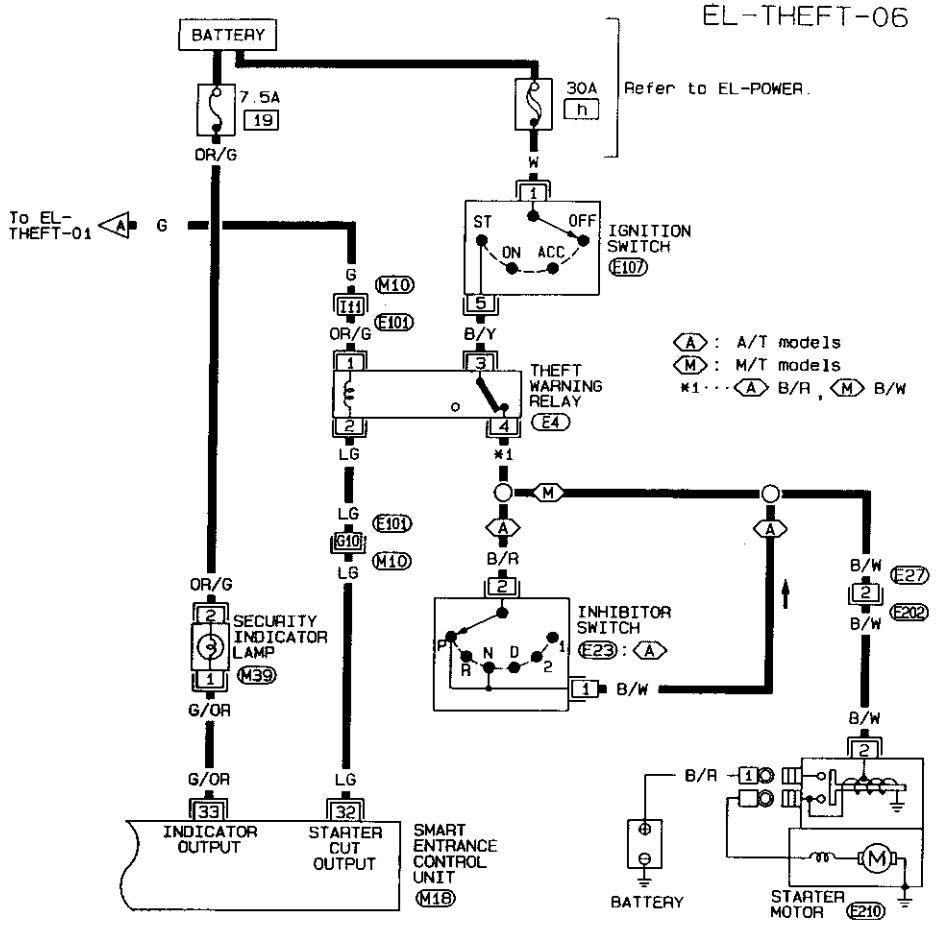

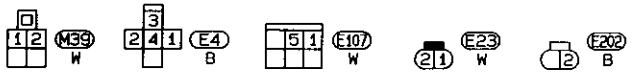

Refer to last page (Foldout page).

M10 , E101

M18

SEL780T

Input/Output Operation Signal

SMART ENTRANCE CONTROL UNIT

Terminal No.	Connections	Operated condition	Voltage (V) (Approximate values)
1	Power source (C/B)	—	12V
7	Multi-remote control relays 1 and 2	When panic alarm is operated.	12V → 1V or less
8	Theft warning horn relay	When panic alarm is operated.	12V → 1V or less
10	Ground	—	—
11	Ignition switch (ON)	"ON" or "START" position	12V
12	Driver door unlock sensor	Driver door: Locked → Unlocked	12V → 4.5V or less
13	Passenger door unlock sensor	Passenger door: Locked → Unlocked	12V → 4.5V or less
15	Driver door switch	OFF (Closed) → ON (Open)	12V → 4.5V or less
16	Passenger door switch	OFF (Closed) → ON (Open)	12V → 1.5V or less
17	Ignition switch (ACC)	"ACC" or "ON" position	12V
26	Trunk room lamp switch	ON (Open) → OFF (Closed)	0V → 12V
27	Trunk key cylinder switch	OFF (Neutral) → ON (Unlocked)	4.5V or more → 0V
28	Door key cylinders tamper switch	OFF → ON	4.5V or more → 0V
29	Hood switch	ON (Open) → OFF (Closed)	0V → 4.5V or more
30	Door key cylinder lock switch	OFF (Neutral) → ON (Locked)	4.5V or more → 0V
31	Door key cylinder unlock switch	OFF (Neutral) → ON (Unlocked)	4.5V or more → 0V
32	Theft warning relay (Starter cut)	OFF → ON	12V → 0V
33	Security indicator	Goes off → Illuminates	12V → 0V

Trouble Diagnoses

SYSTEM OPERATION CHECK

The system operation is canceled by turning ignition switch to "ACC" at any step in the following:

- A step between START and ARMED, or
- In the ARMED phase

in the following flow chart.

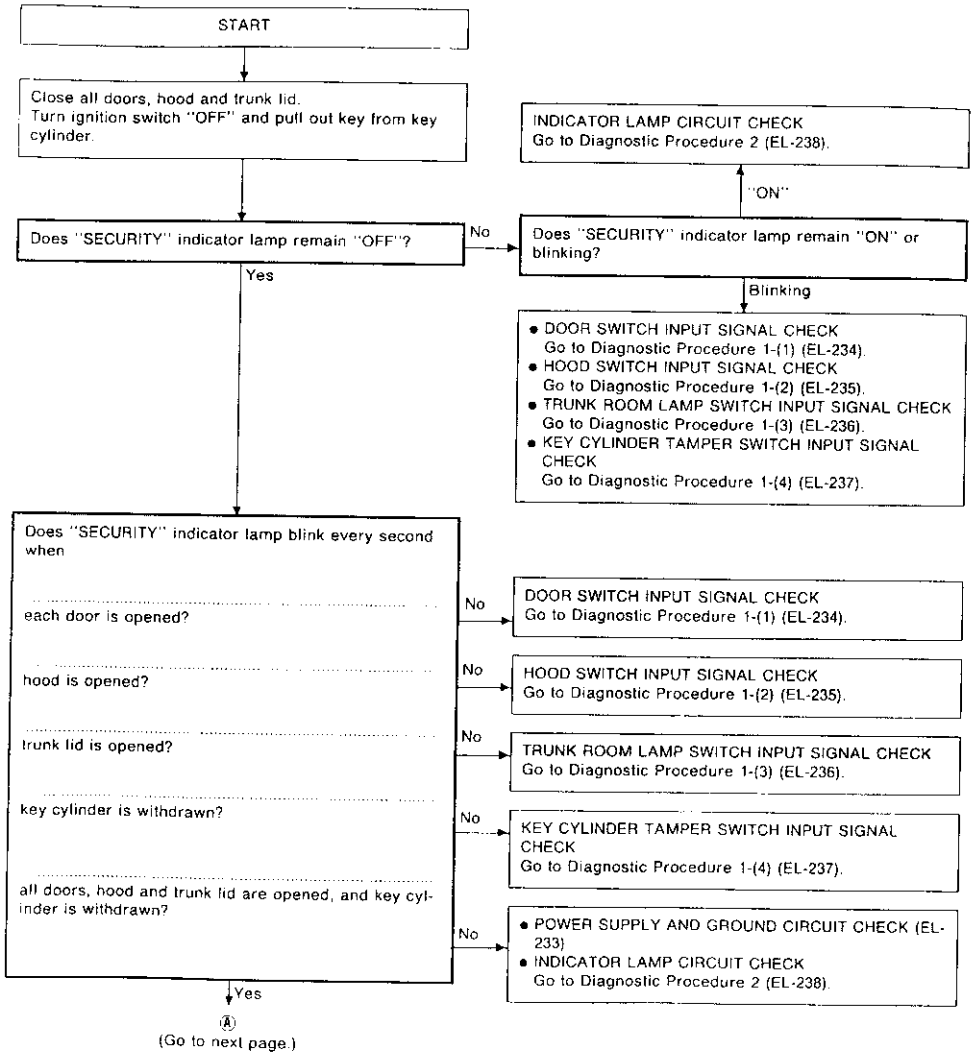

Trouble Diagnoses (Cont'd)

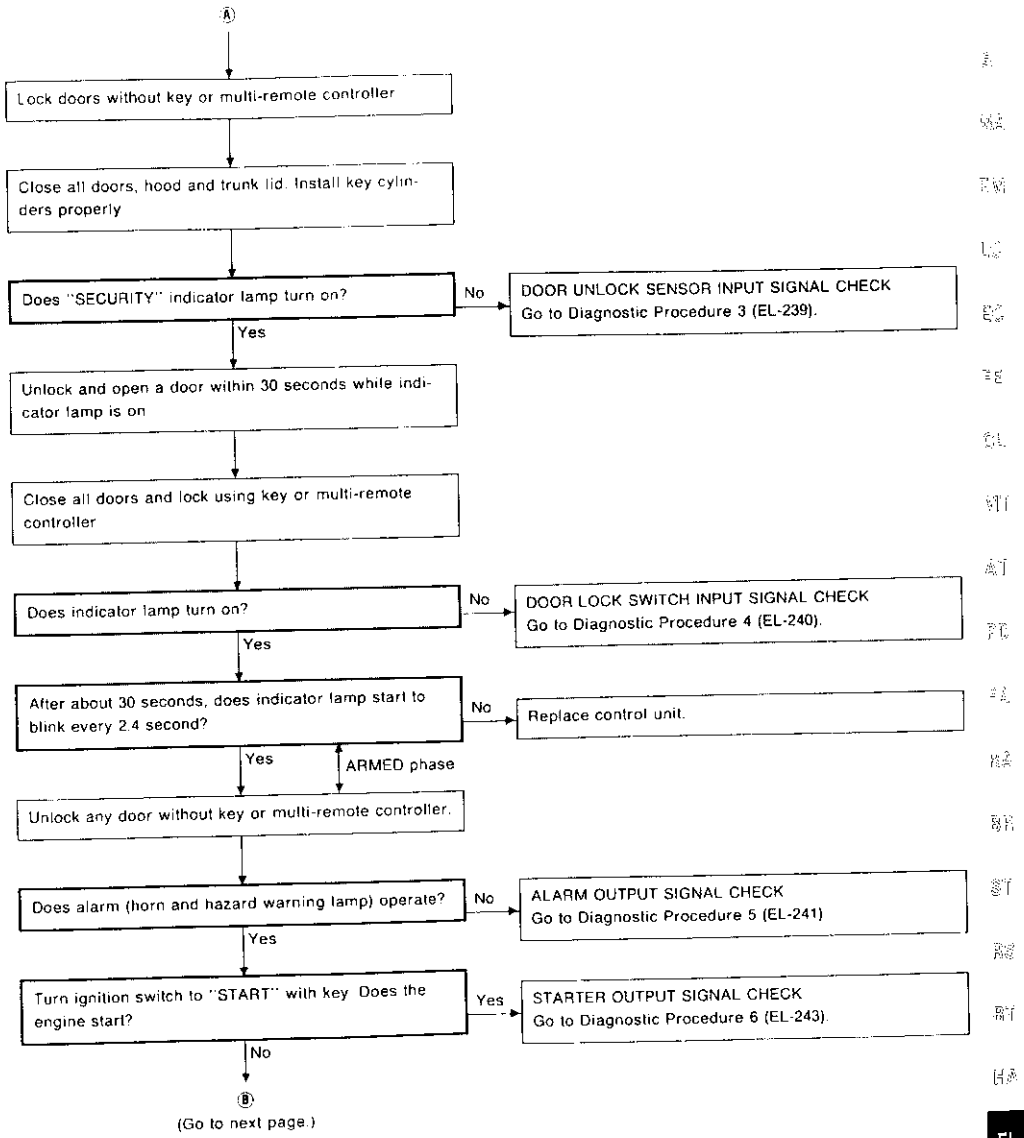

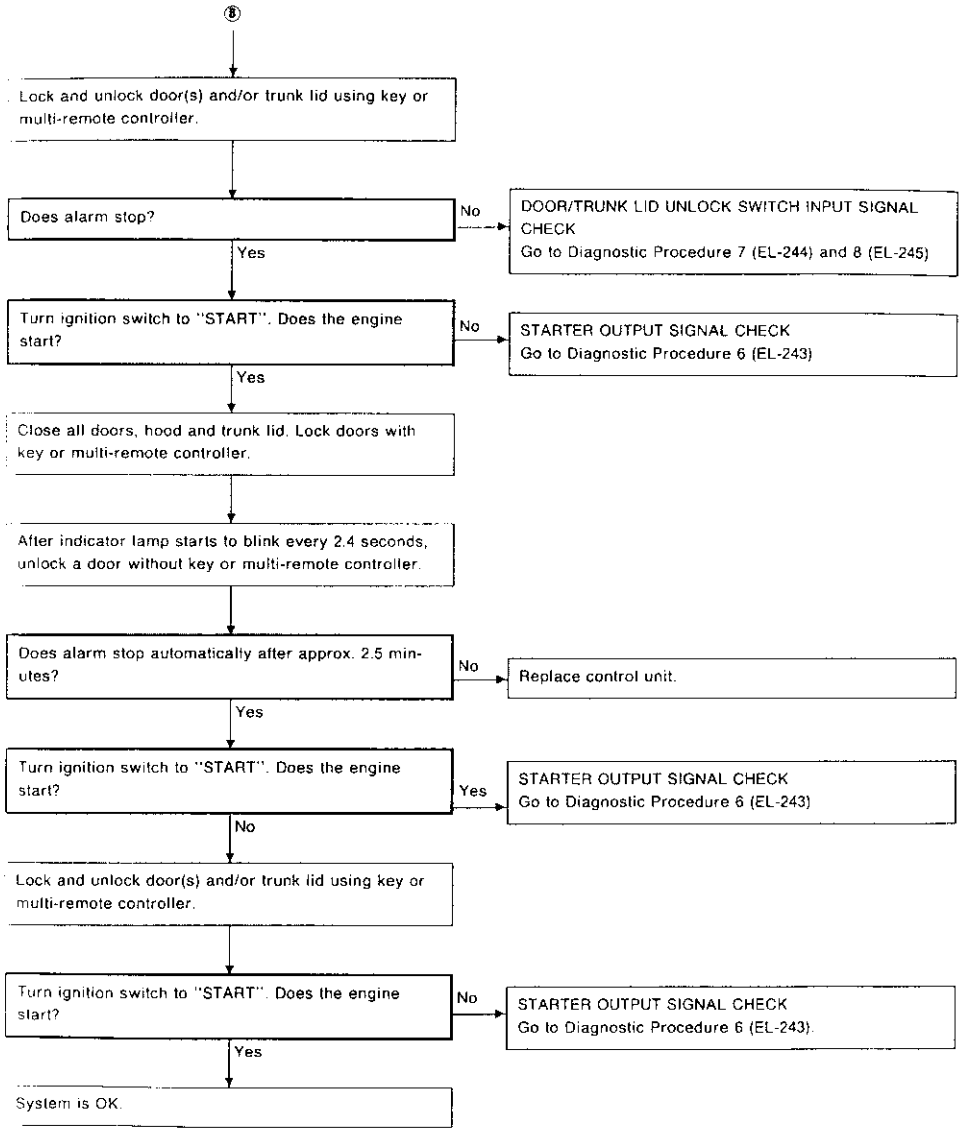

POWER SUPPLY AND GROUND CIRCUIT CHECK

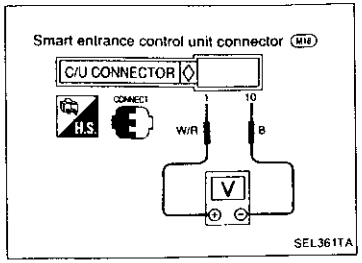

Main power supply circuit check

Terminals	Ignition switch position		
	OFF	ACC	ON
① - ⑱	Battery voltage	Battery voltage	Battery voltage

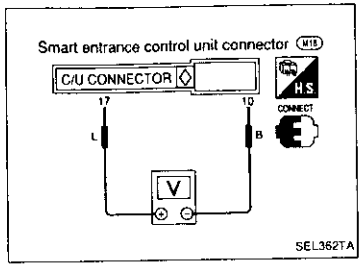

Power supply circuit check for system cancel

Terminals	Ignition switch position		
	OFF	ACC	ON
⑰ - ⑱	0V	Battery voltage	Battery voltage

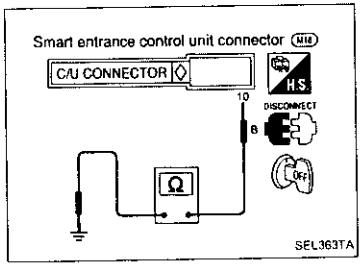

Ground circuit check

Terminals	Continuity
⑱ - Ground	Yes

Trouble Diagnoses (Cont'd)

DIAGNOSTIC PROCEDURE 1

SYMPTOM: • Indicator lamp does not blink or
• Indicator lamp remains blinking every second.

Diagnostic procedure 1-(1)

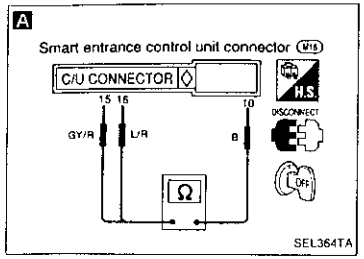

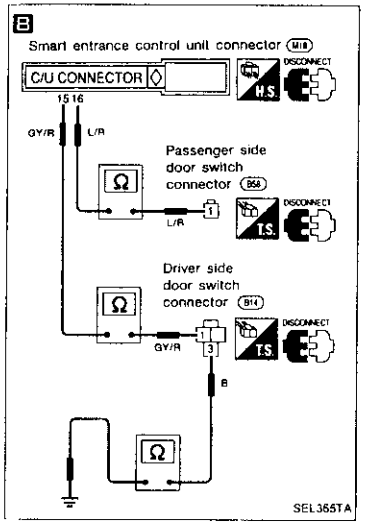

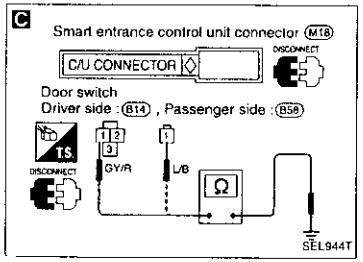

A

DOOR SWITCH INPUT SIGNAL CHECK
Check continuity between control unit harness terminals ⑮ or ⑯ and ⑩

Condition	Continuity between ⑮ and ⑩
Driver side door is closed.	No
Driver side door is opened.	Yes

Condition	Continuity between ⑯ and ⑩
Passenger side door is closed	No
Passenger side door is opened	Yes

OK → Go to Diagnostic Procedure 2 (EL-238).

NG ↓

DOOR SWITCH CHECK
Refer to "Electrical Components Inspection" (EL-246)

NG → Replace door switch.

OK ↓

B

DOOR SWITCH CIRCUIT CHECK
- Check harness continuity between control unit harness terminal ⑮ or ⑯ and door switch harness terminal.
- Check harness continuity between driver side door switch harness terminal ③ and body ground.

Continuity should exist.

NG → Repair harness or connectors.

OK ↓

C

Check harness continuity between door switch harness terminal and body ground.
(Before checking harness continuity, control unit harness connector should be disconnected.)
Continuity should not exist.

NG → Repair harness.
(Short circuit exists between control unit harness terminal ⑮ or ⑯ and door switch harness terminals.)

OK ↓

CHECK THE CONNECTIONS AT EACH CONNECTOR

Trouble Diagnoses (Cont'd)

Diagnostic procedure 1-(2)

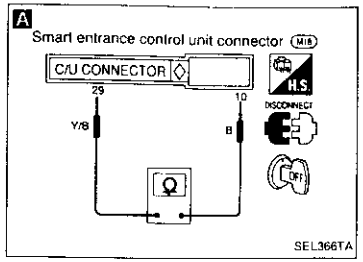

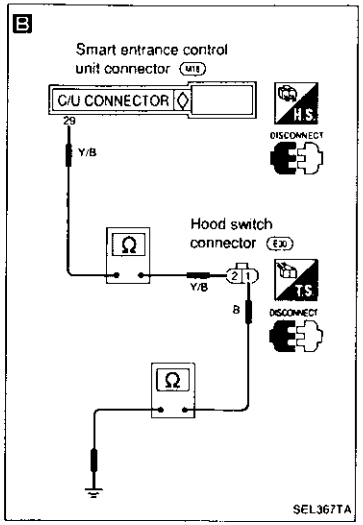

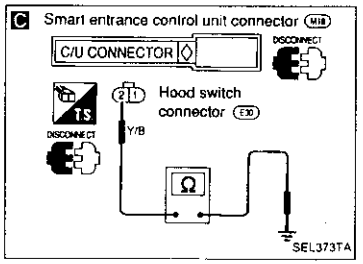

A

HOOD SWITCH INPUT SIGNAL CHECK
Check continuity between control unit harness terminals ㉙ and ⑩.

Condition	Continuity
Hood is open.	Yes
Hood is closed.	No

OK → Go to Diagnostic Procedure 2 (EL-238).

NG ↓

Check hood switch and hood fitting condition.

NG → Adjust installation of hood switch or hood.

OK ↓

HOOD SWITCH CHECK
Refer to "Electrical Components Inspection" (EL-246).

NG → Replace hood switch.

OK ↓

B

HOOD SWITCH CIRCUIT CHECK
- Check harness continuity between control unit harness terminal ㉙ and hood switch harness terminal ②.
- Check harness continuity between hood switch terminal ① and body ground.

Continuity should exist.

NG → Repair harness or connectors

OK ↓

C

Check harness continuity between hood switch harness terminal ② and body ground.
(Before checking harness continuity, control unit harness connector should be disconnected.)
Continuity should not exist.

NG → Repair harness.
(Short circuit exists between control unit harness terminal ㉙ and hood switch harness terminal ②)

OK ↓

CHECK THE CONNECTIONS AT EACH CONNECTOR.

Trouble Diagnoses (Cont'd)

Diagnostic procedure 1-(3)

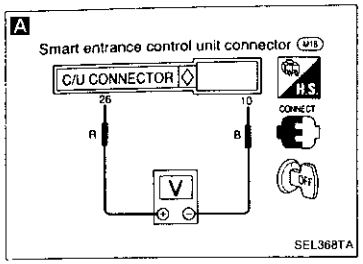

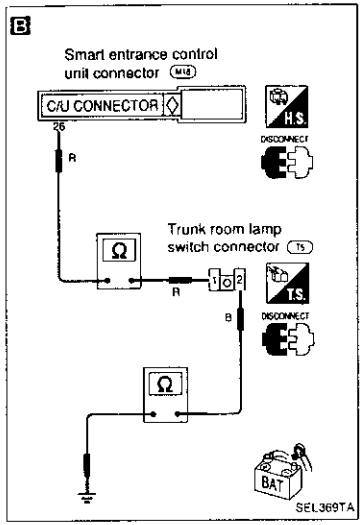

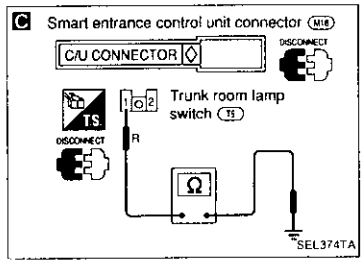

A

TRUNK ROOM LAMP SWITCH INPUT SIGNAL CHECK
Check voltage between control unit harness terminals 26 and 10.

Condition	Voltage
Trunk lid is open.	Approx. 0V
Trunk lid is closed.	Approx. 12V

OK → Go to Diagnostic Procedure 2 (EL-238).

NG →

TRUNK ROOM LAMP SWITCH CHECK
Refer to "Electrical Components Inspection" (EL-246).

NG → Replace trunk room lamp switch.

OK ↓

B

TRUNK ROOM LAMP SWITCH CIRCUIT CHECK
- Check harness continuity between control unit harness terminal 26 and trunk room lamp switch harness terminal ①.
- Check harness continuity between trunk room lamp switch harness terminal ② and body ground.

Continuity should exist.

NG → Repair harness or connectors.

OK ↓

C

Check harness continuity between trunk room lamp switch harness terminal ① and body ground.
(Before checking harness continuity, control unit harness connector should be disconnected.)
Continuity should not exist.

NG → Repair harness.
(Short circuit exists between control unit harness terminal 26 and trunk room lamp switch harness terminal ①.)

OK ↓

CHECK THE CONNECTIONS AT EACH CONNECTOR.

Trouble Diagnoses (Cont'd)

Diagnostic procedure 1-(4)

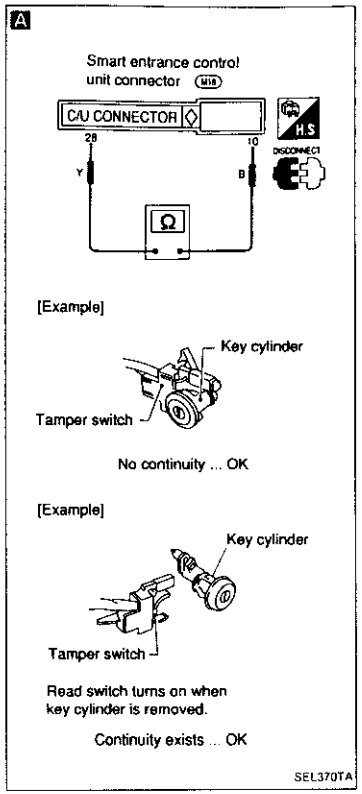

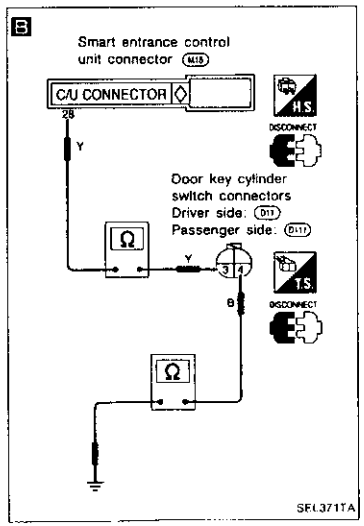

A

KEY CYLINDER TAMPER SWITCH INPUT SIGNAL CHECK
Check continuity between control unit harness terminals 28 and 10.

Condition	Continuity
Tamper switch is	
Normal	No
Removed	Yes

OK → Go to Diagnostic Procedure 2 (EL-238).

NG ↓

KEY CYLINDER TAMPER SWITCH CHECK
Refer to "Electrical Components Inspection" (EL-247)

NG → Replace door key cylinder switch.

OK ↓

B

KEY CYLINDER TAMPER SWITCH CIRCUIT CHECK
- Check harness continuity between control unit harness terminal 28 and door key cylinder switch harness terminal ③.
- Check harness continuity between door key cylinder switch terminal ④ and body ground.

Continuity should exist.

NG → Repair harness and connectors.

OK ↓

Ⓐ
(Next page)

Trouble Diagnoses (Cont'd)

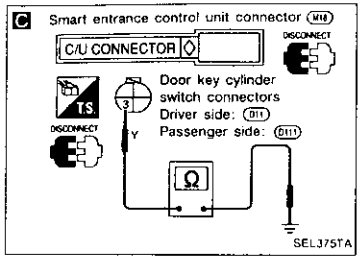

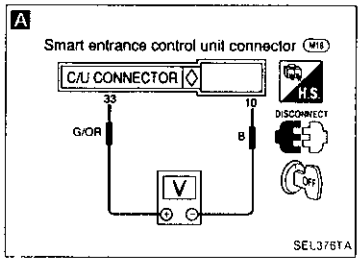

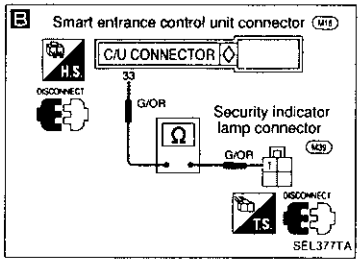

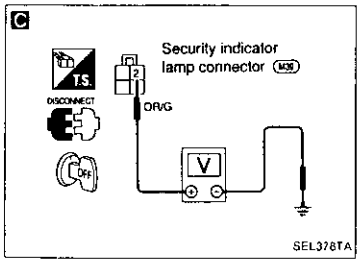

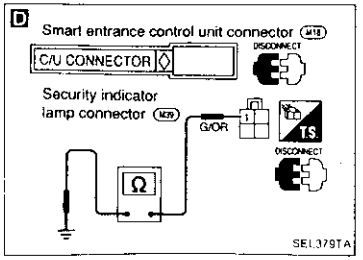

Ⓐ

C

Check harness continuity between door key cylinder switch harness terminal ③ and body ground.
(Before checking harness continuity, control unit harness connector should be disconnected.)
Continuity should not exist.

NG → Repair harness.
(Short circuit exists between control unit harness terminal ㉘ and door key cylinder switch terminal ③.)

OK ↓

CHECK THE CONNECTIONS AT EACH CONNECTOR.

DIAGNOSTIC PROCEDURE 2

SYMPTOM: • Indicator lamp does not blink or
• Indicator lamp remains "ON".

A

INDICATOR LAMP OUTPUT SIGNAL CHECK
Check voltage between control unit harness terminals ㉝ and ⑩.
Battery voltage should exist.

OK → Replace control unit.

NG ↓

CHECK INDICATOR LAMP.

NG → Replace indicator lamp.

OK ↓

B

INDICATOR LAMP CIRCUIT CHECK
Check harness continuity between control unit harness terminal ㉝ and indicator lamp harness terminal ①.
Continuity should exist.

NG → Repair harness or connectors.

OK ↓

C

Check voltage between indicator lamp harness terminal ② and body ground
Battery voltage should exist.

NG → Repair harness or connectors.

OK ↓

D

Check harness continuity between indicator lamp harness terminal ① and body ground.
(Before checking harness continuity, control unit harness connector should be disconnected.)
Continuity should not exist.

NG → Repair harness.
(Short circuit exists between control unit harness terminal ㉝ and indicator lamp harness terminal ①.)

OK ↓

CHECK THE CONNECTIONS AT EACH CONNECTOR.

↓

Replace control unit.

Trouble Diagnoses (Cont'd)

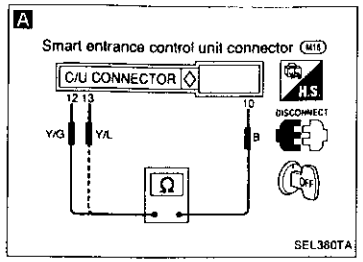

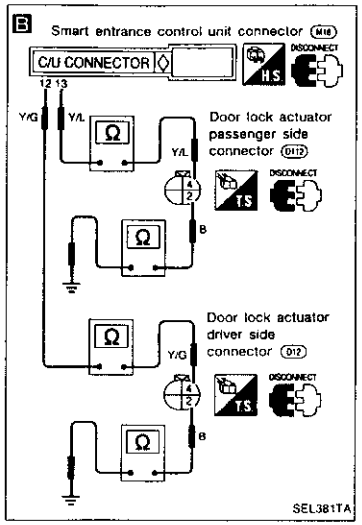

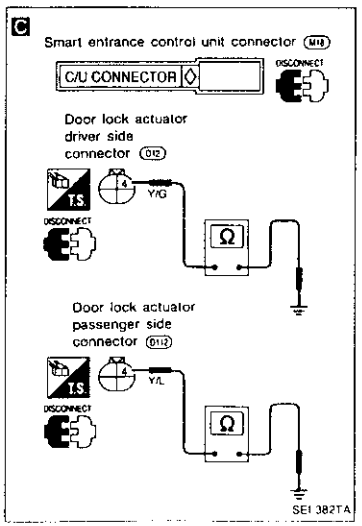

DIAGNOSTIC PROCEDURE 3

SYMPTOM: Indicator lamp does not come on.

A

DOOR UNLOCK SENSOR INPUT SIGNAL CHECK
Check continuity between control unit harness terminals ⑫ or ⑬ and ⑩.

Condition	Continuity between ⑫ and ⑩
Driver side door is locked.	No
Driver side door is unlocked.	Yes

Condition	Continuity between ⑬ and ⑩
Passenger side door is locked.	No
Passenger side door is unlocked.	Yes

OK → Go to Diagnostic Procedure 2 (EL-238).

OK ↓

Replace control unit.

NG ↓

DOOR UNLOCK SENSOR CHECK
Refer to "Electrical Components Inspection" (EL-247).

NG → Replace door lock actuator.

OK ↓

B

DOOR UNLOCK SENSOR CIRCUIT CHECK
- Check harness continuity between control unit harness terminal ⑫ or ⑬ and door actuator terminal ④
- Check harness continuity between door lock actuator harness terminal ② and body ground.

Continuity should exist.

NG → Repair harness or connectors.

OK ↓

C

Check harness continuity between door lock actuator harness terminal ④ and body ground.
(Before checking harness continuity, control unit harness connector should be disconnected.)
Continuity should not exist.

NG → Repair harness.
(Short circuit exists between control unit harness terminal ⑫ or ⑬ and door lock actuator harness terminal ④.)

OK ↓

CHECK THE CONNECTIONS AT EACH CONNECTOR

Trouble Diagnoses (Cont'd)

DIAGNOSTIC PROCEDURE 4

SYMPTOM: Indicator lamp does not come on.

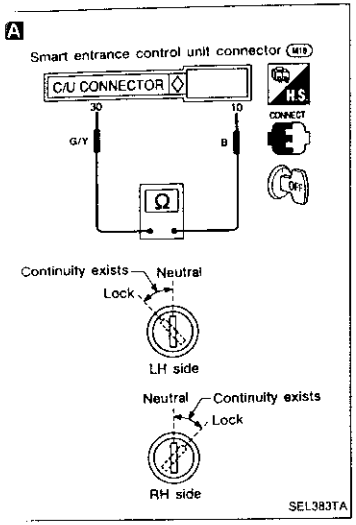

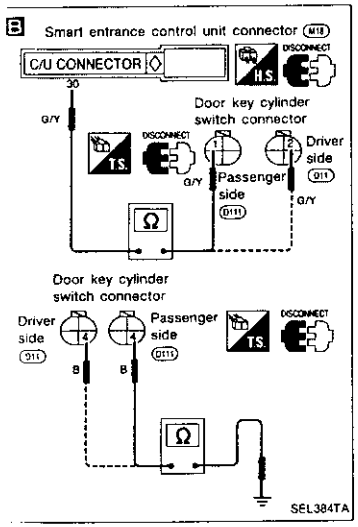

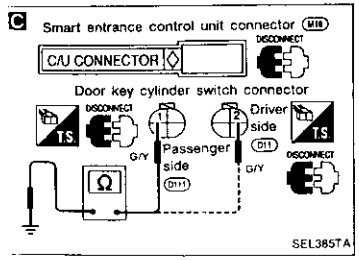

A

DOOR LOCK SWITCH INPUT SIGNAL CHECK (LOCK SIGNAL)
Check continuity between control unit harness terminals ㉚ and ⑩.

Key position	Continuity
Neutral/Lock	No
Between neutral and lock	Yes

OK → Go to Diagnostic Procedure 2 (EL-238)
OK → Replace control unit.

NG →

DOOR LOCK SWITCH CHECK
Refer to "Electrical Components Inspection" (EL-247).

NG → Replace key cylinder switch.

OK ↓

B

DOOR LOCK SWITCH CIRCUIT CHECK
- Check harness continuity between control unit harness terminal ㉚ and door key cylinder switch terminal.
- Check harness continuity between door key cylinder switch terminal and body ground.

Continuity should exist.

NG → Repair harness or connectors.

OK ↓

C

Check harness continuity between door key cylinder switch terminal and body ground.
(Before checking harness continuity, control unit harness connector should be disconnected.)
Continuity should not exist.

NG → Repair harness.
(Short circuit exists between control unit harness terminal ㉚ and door key cylinder switch terminal.)

OK ↓

CHECK THE CONNECTIONS AT EACH CONNECTOR.

Trouble Diagnoses (Cont'd)

DIAGNOSTIC PROCEDURE 5

SYMPTOM: Alarm does not operate.

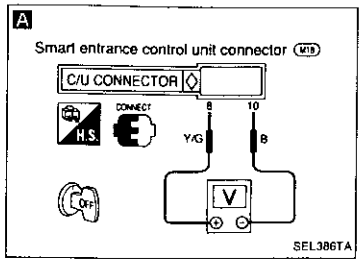

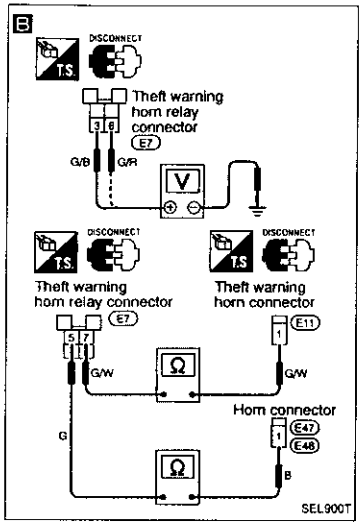

A

ALARM SIGNAL OUTPUT CHECK
Check voltage between control unit harness terminals ⑧ and ⑩.

Condition	Voltage
Except alarm phase	Approx. 12V
Alarm phase	Voltage fluctuates between 12V and 0V.

NG → CHECK THE FOLLOWING.
- Harness continuity between control unit harness terminal ⑧ and theft warning horn relay harness terminal ②.
- Harness continuity between fuse and theft warning horn relay harness terminal ①.
- Harness continuity between control unit harness terminal ⑧ and horn relay harness terminal ①.
- Harness continuity between fuse and horn relay harness terminal ②.
- Theft warning horn relay.
  Refer to "Electrical Components Inspection" (EL-248).

OK ↓

OK →

ALARM SIGNAL INPUT CHECK
- Door switch circuit
  Refer to Diagnostic Procedure 1-(1) (EL-234).
- Hood switch circuit
  Refer to Diagnostic Procedure 1-(2) (EL-235).
- Trunk room lamp switch circuit
  Refer to Diagnostic Procedure 1-(3) (EL-236).
- Key cylinder tamper switch circuit
  Refer to Diagnostic Procedure 1-(4) (EL-237).
- Door unlock sensor circuit
  Refer to Diagnostic Procedure 3 (EL-239).

OK ↓

Replace control unit.

B

HORN CIRCUIT CHECK
- Check voltage between theft warning horn relay harness terminal ③ and body ground, terminal ⑥ and body ground.
  Battery voltage should exist.
- Check harness continuity between theft warning horn relay harness terminals ⑤, ⑦ and horn harness terminals.
  Continuity should exist.

OK ↓ NG → Repair harness or connectors.

HORN CHECK
Refer to "Electrical Components Inspection" (EL-247).

OK ↓ NG → Replace horn.

THEFT WARNING HORN RELAY CHECK
Refer to "Electrical Components Inspection" (EL-248).

OK ↓ NG → Replace relay.

Ⓐ
(Next page)

Trouble Diagnoses (Cont'd)

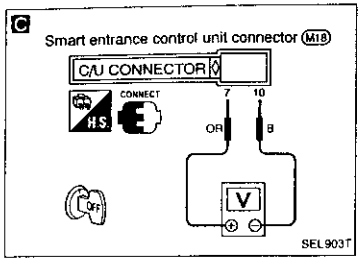

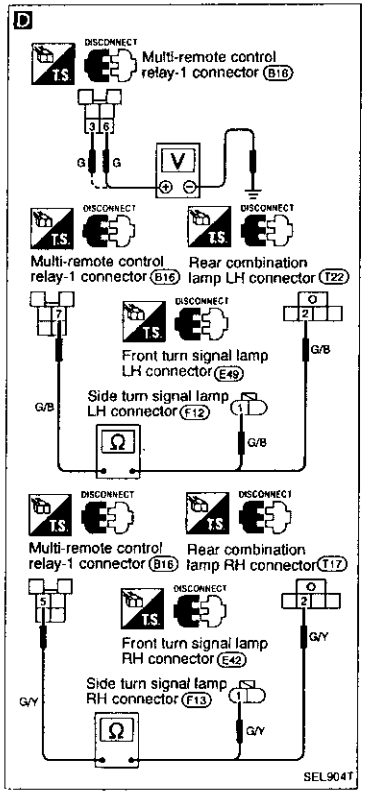

Ⓐ

C

FLASHER OUTPUT CHECK
Check voltage between control unit harness terminals ⑦ and ⑩.

Condition	Voltage
Except alarm phase	Approx. 12V
Alarm phase	Voltage fluctuates between 12V and 0V.

NG → CHECK THE FOLLOWING.
- Harness continuity between control unit harness terminal ⑦ and multi-remote control relay-1 harness terminal ②
- Harness continuity between fuse and multi-remote control relay-1 harness terminal ①
- Harness continuity between control unit harness terminal ⑦ and multi-remote control relay-1 harness terminal ①
- Harness continuity between fuse and multi-remote control relay-1 harness terminal ②
- Multi-remote control relay-1
  Refer to "Electrical Components Inspection" (EL-248).

OK

D

HAZARD WARNING LAMP CIRCUIT CHECK
- Check voltage between multi-remote control relay-1 harness terminals ⑥, ③ and body ground.

Battery voltage should exist.
- Check harness continuity between multi-remote control relay-1 harness terminal ⑦ and rear combination lamp LH harness terminal ②.
- Check harness continuity between multi-remote control relay-1 harness terminal ⑦ and front/side turn signal lamp LH harness terminal ①.
- Check harness continuity between multi-remote control relay-1 harness terminal ⑤ and rear combination lamp RH harness terminal ②.
- Check harness continuity between multi-remote control relay-1 harness terminal ⑤ and front/side turn signal lamp RH harness terminal ①.

Continuity should exist.

NG → Repair harness or connectors.

OK

Does hazard warning lamp come on when pushing hazard warning lamp switch?

No → Check turn signal lamp system.
Refer to "TURN SIGNAL LAMP" (EL-93).

Yes

CHECK THE CONNECTIONS AT EACH CONNECTOR.

Trouble Diagnoses (Cont'd)

DIAGNOSTIC PROCEDURE 6

SYMPTOM:
- **STARTER MOTOR can be operated. (Starter killed phase) or**
- **STARTER MOTOR cannot be operated after the theft warning system is deactivated.**

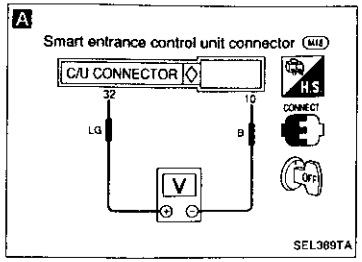

A

STARTER MOTOR KILL OUTPUT SIGNAL CHECK
Check voltage between control unit harness terminals ㉜ and ⑩.

Condition	Voltage
Except starter killed phase	Approx. 12V
Starter killed phase	0V

NG → CHECK THE FOLLOWING.
- Harness continuity between control unit harness terminal ㉜ and theft warning relay harness terminal ②
- Harness continuity between theft warning relay harness terminal ① and fuse.
- Theft warning relay
  Refer to "Electrical Components Inspection" (EL-248).

OK → Replace control unit.

OK

THEFT WARNING RELAY CHECK
Refer to "Electrical Components Inspection" (EL-248).

OK

CHECK THE CONNECTIONS AT EACH CONNECTOR.

NG → Replace relay.

Trouble Diagnoses (Cont'd)

DIAGNOSTIC PROCEDURE 7

SYMPTOM: Alarm does not stop even if stop signal is given.

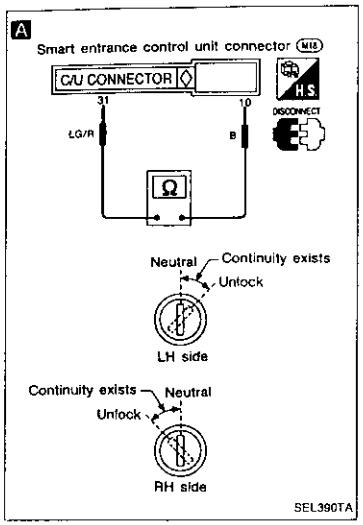

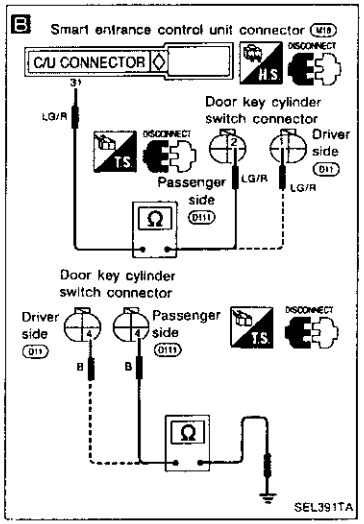

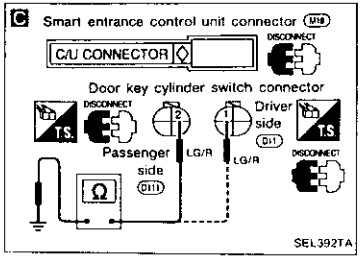

A

DOOR UNLOCK SWITCH INPUT SIGNAL CHECK (UNLOCK SIGNAL)
Check continuity between control unit harness terminals 31 and 10.

Key position	Continuity
Neutral/Unlock	No
Between neutral and unlock	Yes

OK → ALARM OUTPUT SIGNAL CHECK
Go to Diagnostic Procedure 5. (EL-241).

NG

DOOR UNLOCK SWITCH CHECK
Refer to "Electrical Components Inspection" (EL-247).

NG → Replace key cylinder switch.

OK

B

DOOR UNLOCK SWITCH CIRCUIT CHECK
- Check harness continuity between control unit harness terminal 31 and door key cylinder switch terminal.
- Check harness continuity between door key cylinder switch terminal and body ground.

Continuity should exist.

NG → Repair harness or connectors.

OK

C

Check harness continuity between door key cylinder switch terminal and body ground.
(Before checking harness continuity, control unit harness connector should be disconnected.)
Continuity should not exist.

NG → Repair harness.
(Short circuit exists between control unit harness terminal 31 and door key cylinder switch terminal.)

OK

CHECK THE CONNECTIONS AT EACH CONNECTOR.

Trouble Diagnoses (Cont'd)

DIAGNOSTIC PROCEDURE 8

SYMPTOM: Alarm does not stop even if stop signal is given.

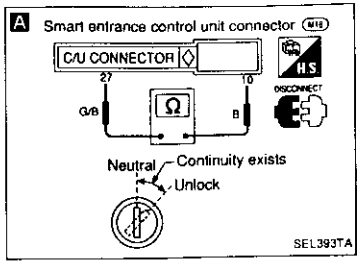

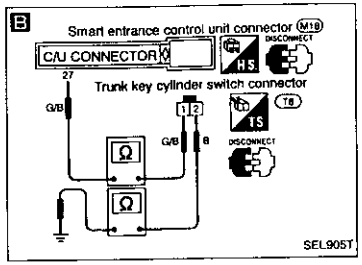

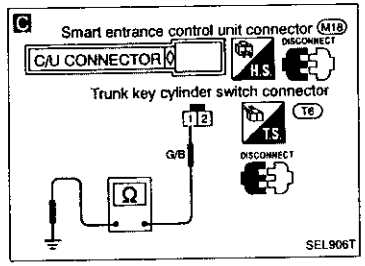

A

TRUNK KEY CYLINDER SWITCH INPUT SIGNAL CHECK (UNLOCK SIGNAL)
Check continuity between control unit harness terminals 27 and 10.

Key position	Continuity
Neutral/Unlock	No
Between neutral and unlock	Yes

OK → ALARM OUTPUT SIGNAL CHECK
Go to Diagnostic Procedure 5. (EL-241).

NG

TRUNK KEY CYLINDER SWITCH CHECK
Refer to "Electrical Components Inspection" (EL-247).

NG → Replace trunk key cylinder switch.

OK

B

TRUNK KEY CYLINDER SWITCH CIRCUIT CHECK
- Check harness continuity between control unit harness terminal 27 and trunk key cylinder switch terminal ①.
- Check harness continuity between trunk key cylinder switch terminal ② and body ground.

NG → Repair harness or connectors.

OK

C

Check harness continuity between trunk key cylinder switch harness terminal ① and body ground.
(Before checking harness continuity, control unit harness connector should be disconnected.)
Continuity should not exist.

NG → Repair harness.
(Short circuit exists between control unit harness terminal 27 and trunk key cylinder switch harness terminal ①.)

OK

CHECK THE CONNECTIONS AT EACH CONNECTOR.

Trouble Diagnoses (Cont'd)

ELECTRICAL COMPONENTS INSPECTION

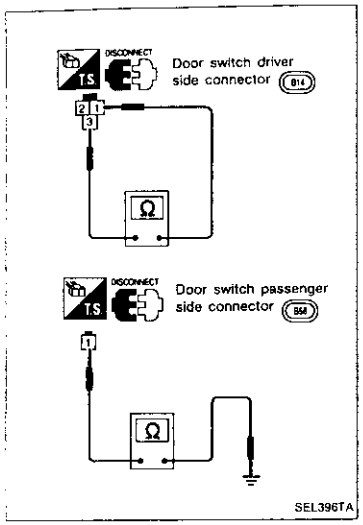

Door switches

Check continuity between terminals when door switch is pushed and released.

Terminal No.	Condition	Continuity
Driver side: ① - ③ Passenger side: ① - body ground	Door switch is pushed.	No
	Door switch is released.	Yes

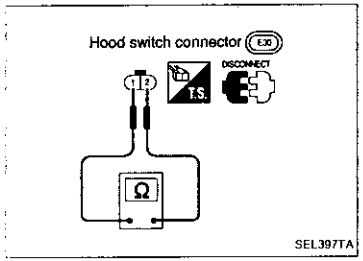

Hood switch

Check continuity between terminals when hood switch is pushed and released.

Terminal No.	Condition	Continuity
① - ②	Hood switch is pushed.	No
	Hood switch is released.	Yes

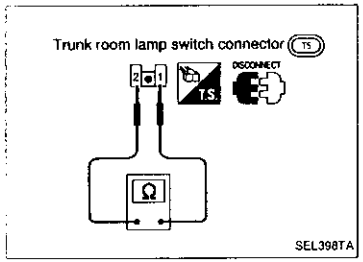

Trunk room lamp switch

Check continuity between terminals when trunk lid is closed and opened.

Terminal No.	Condition	Continuity
① - ②	Trunk lid is closed.	No
	Trunk lid is opened.	Yes

Trouble Diagnoses (Cont'd)

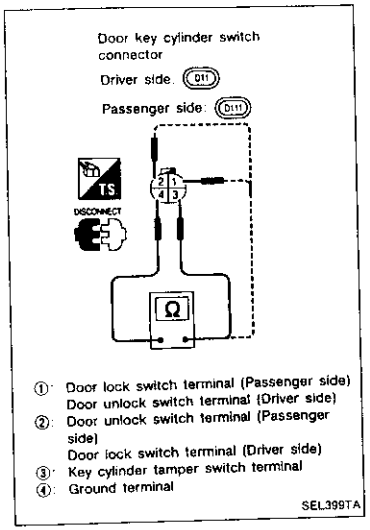

Key cylinder tamper switch, door lock switch and door unlock switch

- **Door key cylinder switch**

	Terminal No.	Condition	Continuity
Tamper switch	③ - ④	Key cylinder is installed.	No
		Key cylinder is removed.	Yes
Door lock switch	Driver side: ② - ④ Passenger side: ① - ④	Key position is neutral or lock.	No
		Key position is between neutral and lock.	Yes
Door unlock switch	Driver side: ① - ④ Passenger side: ② - ④	Key position is neutral or unlock.	No
		Key position is between neutral and unlock.	Yes

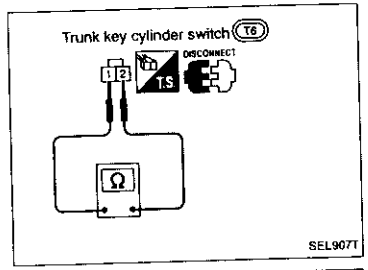

- **Trunk key cylinder switch (unlock switch)**

Terminal No.	Condition	Continuity
① - ②	Key position is neutral.	No
	Key position is unlock.	Yes

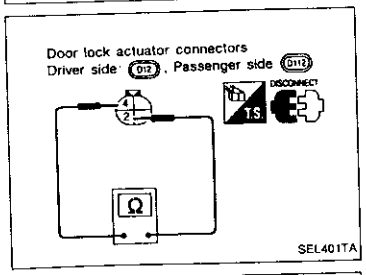

- **Door lock actuator (Door unlock sensor)**

Terminal No.	Condition	Continuity
④ - ②	Door is locked.	No
	Door is unlocked.	Yes

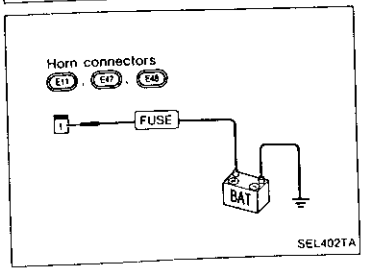

Horns

Supply horn terminal with battery voltage and check horn operation.

Trouble Diagnoses (Cont'd)

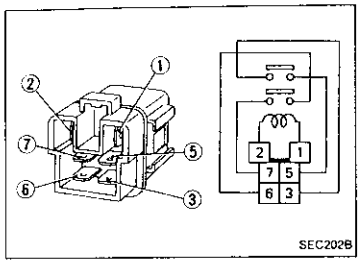

Theft warning horn relay and multi-remote control relay-1

Check continuity between terminals ③ and ⑤, ⑥ and ⑦.

Condition	Continuity
12V direct current supply between terminals ① and ②	Yes
No current supply	No

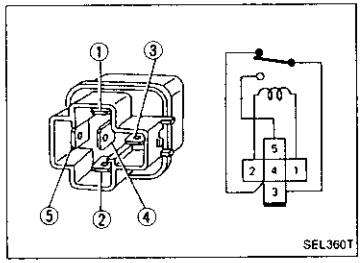

Theft warning relay

Check continuity between terminals ③ and ④.

Condition	Continuity
12V direct current supply between terminals ① and ②	No
No current supply	Yes

Engine Compartment

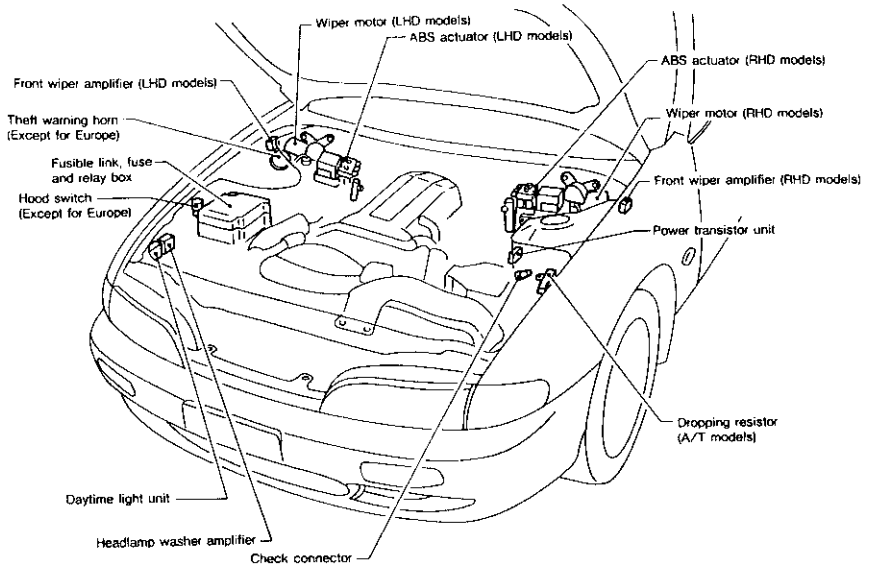

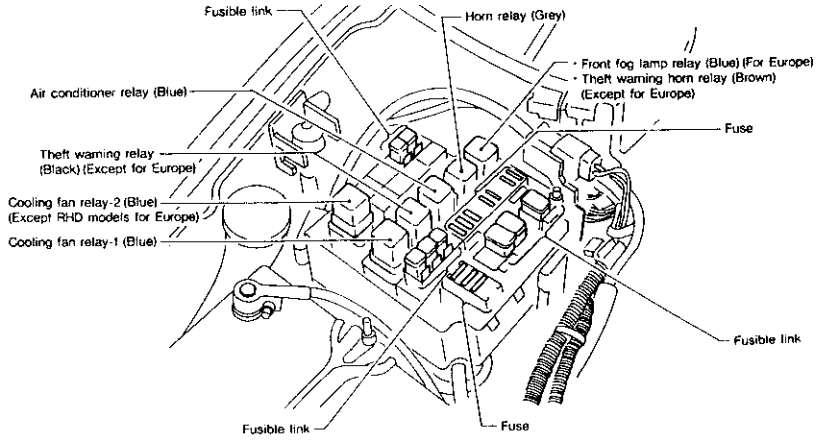

SEL851T

Passenger Compartment

LHD MODELS

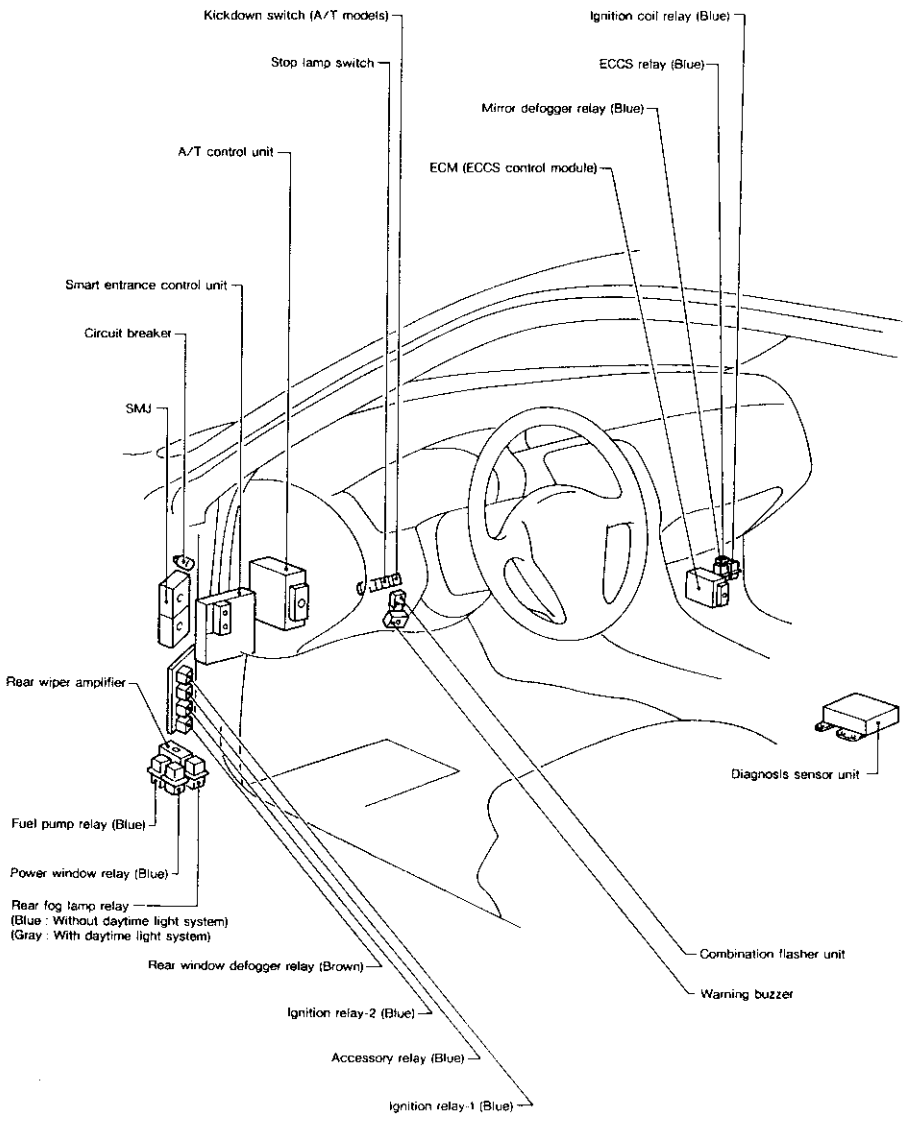

SEL862T

Passenger Compartment (Cont'd)

RHD MODELS

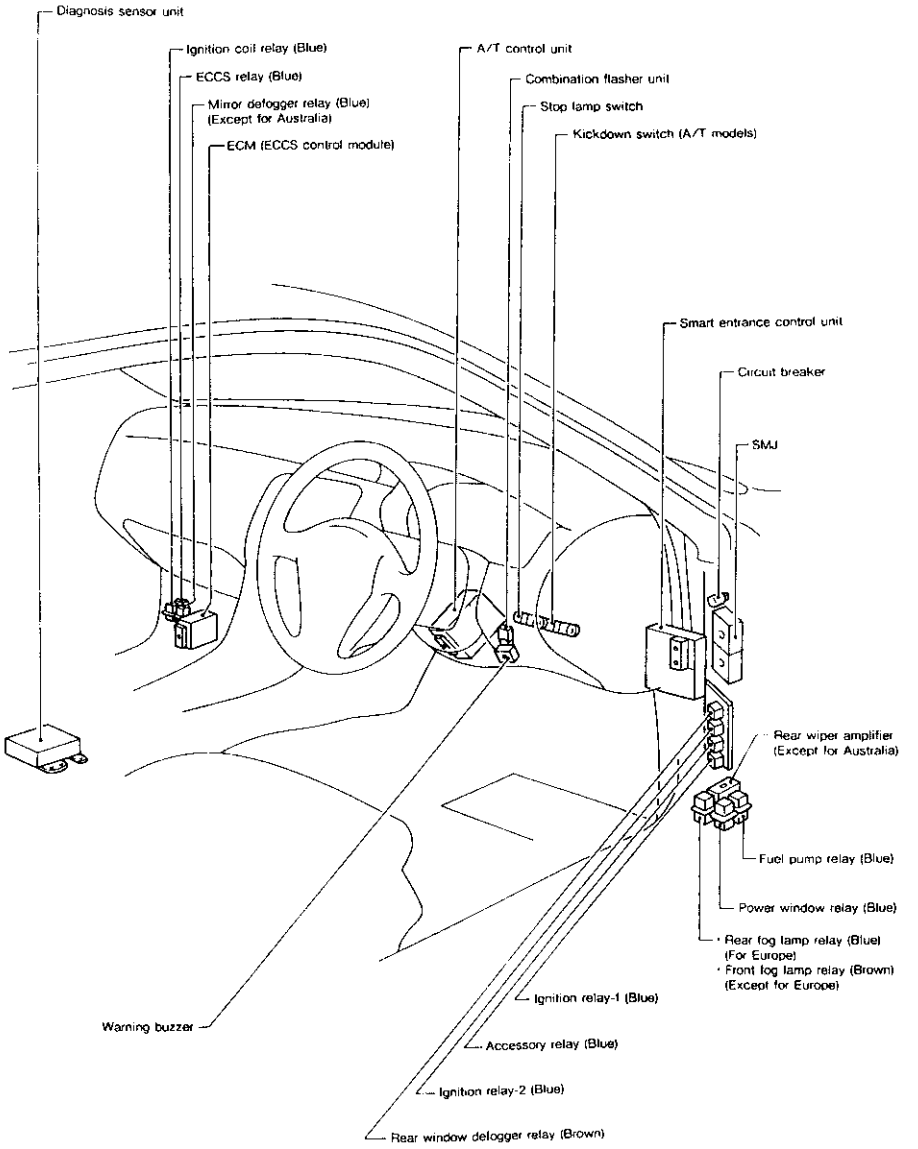

SEL863T

Trunk Compartment

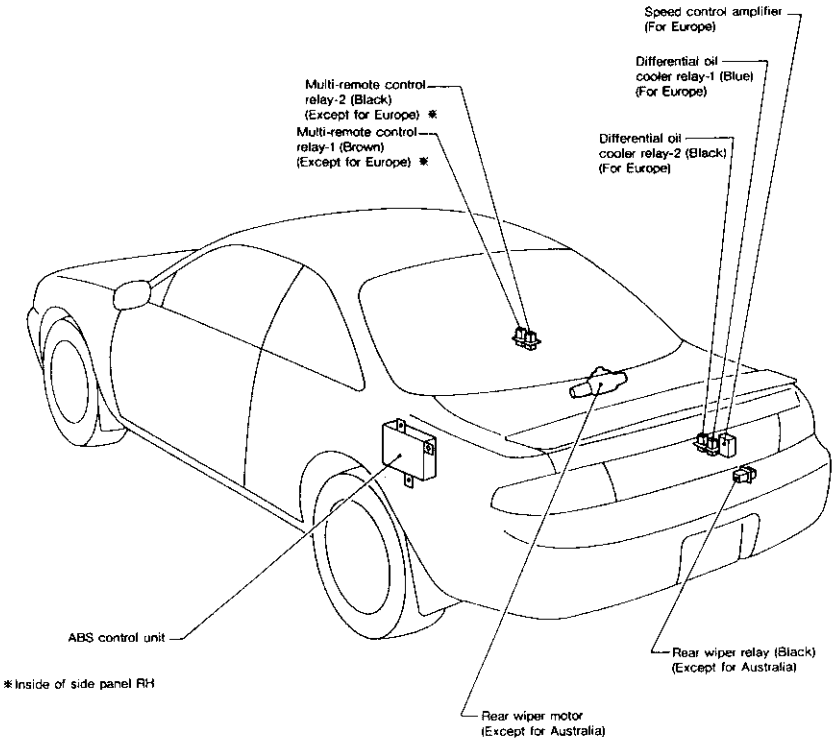

*Inside of side panel RH

SEL864T

Outline

LHD MODELS

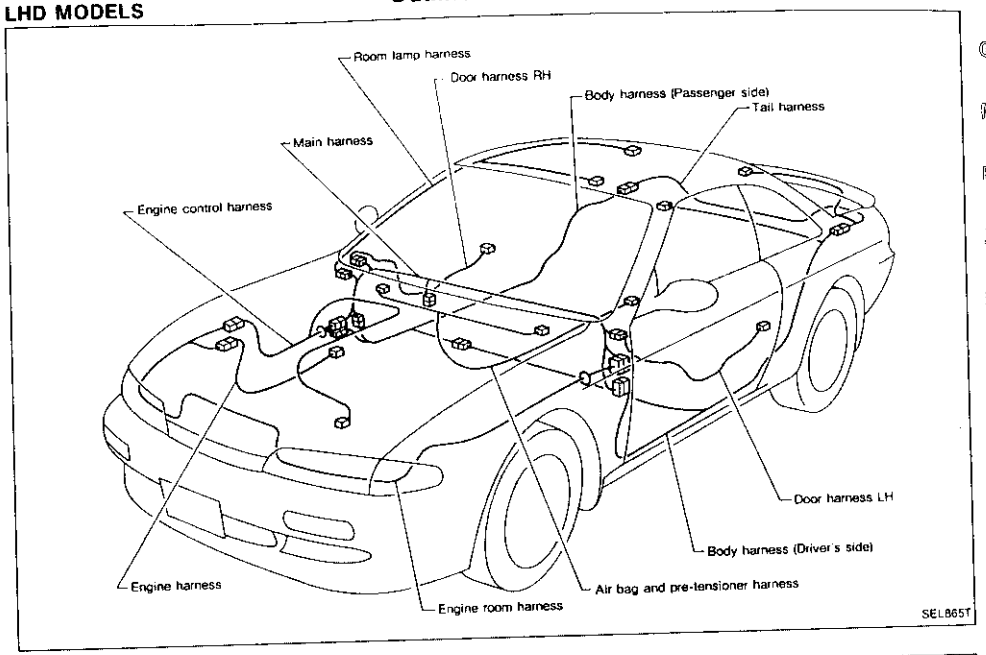

SEL865T

RHD MODELS

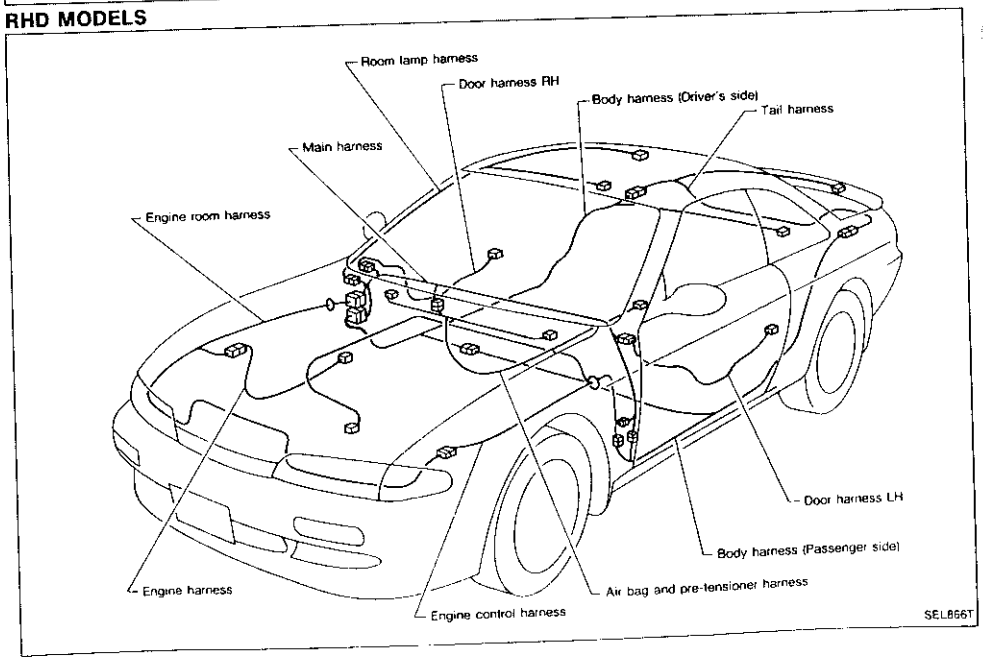

SEL866T

Main Harness

LHD MODELS

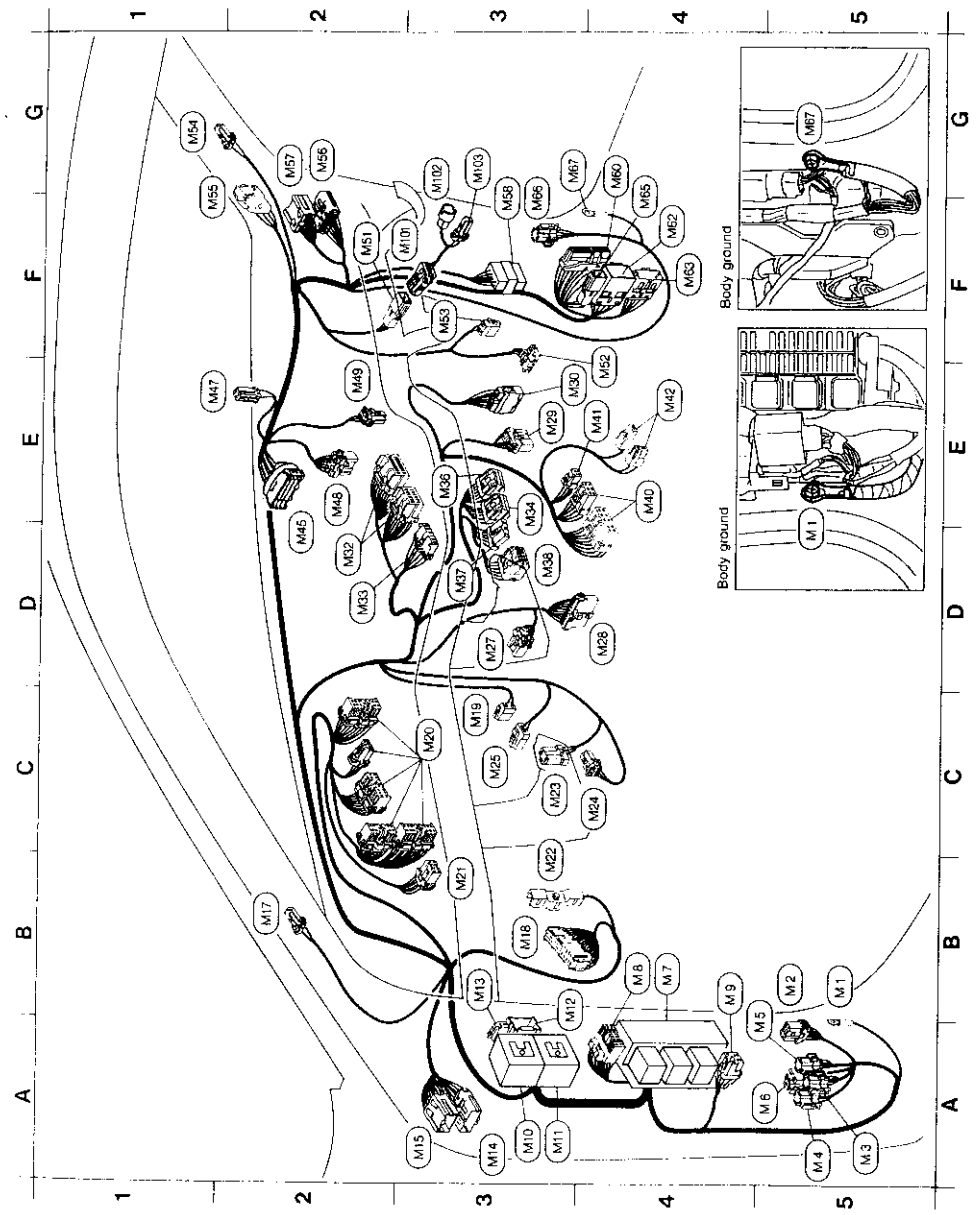

Main Harness (Cont'd)

B5 : Body ground
B5 : Rear wiper amplifier
A5 : Fuel pump relay
A5 : Power window relay
A5 : Rear fog lamp relay (Models without daytime light system)
A5 : Rear fog lamp relay (Models with daytime light system)
B4 : Fuse block
B4 : Data link connector for CONSULT
B4 : Rear window defogger relay
A3 : To E10 (SMJ)
A3 : To B1 (SMJ)
B3 : To E102
B3 : Circuit breaker
A3 : To D1
A3 : To D2
B2 : Pillar speaker LH
B3 : Smart entrance control unit
C3 : Kickdown switch (A/T models)
C3 : Combination meter
B3 : Illumination control switch
B3 : A/T control unit (A/T models)
C3 : Combination flasher unit
C4 : Buzzer
C3 : Stop lamp switch
D3 : Air mix door motor
D4 : Mode door motor
E3 : Bi-level door motor
E3 : To 25
D2 : Push control unit
D2 : Fan switch
E3 : Hazard switch
E3 : Headlamp washer switch
D3 : Rear window defogger switch
D3 : Rear fog lamp switch
E4 : Radio
E4 : Not used
E4 : Cigarette lighter
D2 : Joint connector
E1 : Not used
E2 : Intake door motor
E2 : Thermo control amplifier
F2 : To M10
E4 : Fan resistor
F3 : Blower motor
G1 : Pillar speaker RH
F1 : To R1
G2 : To D101
G2 : To D102
F3 : Joint connector
G4 : To F4
F4 : To F7 (A/T models)
F4 : To B51
F4 : To F6 (M/T models)
F3 : Mirror defogger relay
G3 : Body ground
F3 : To M51
G3 : Glove box lamp
G3 : Glove box lamp switch

SEL867T

RHD MODELS

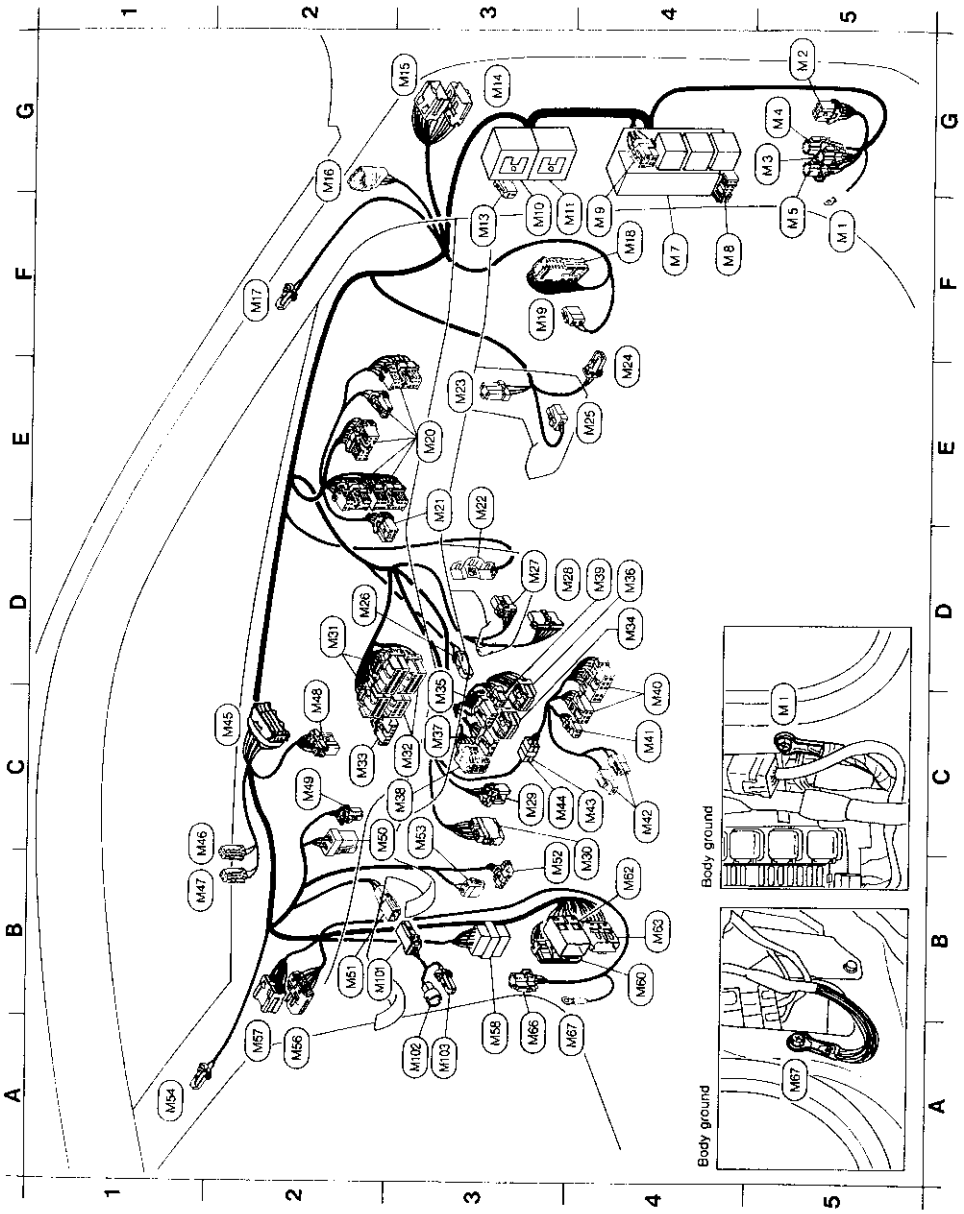

F5 (M1) : Body ground
G5 (M2) : Rear wiper amplifier (Except for Australia)
G6 (M3) : Fuel pump relay
G5 (M4) : Power window relay
F5 (M5) : Rear fog lamp relay (For Europe)
F4 (M7) : Fuse block
F4 (M8) : Data link connector for CONSULT
F4 (M9) : Rear window defogger relay
F3 (M10) : To (E101) (SMJ)
F3 (E11) : To (B1) (SMJ)
F3 (M13) : Circuit breaker
G3 (M14) : To (D1)
G3 (M15) : To (D2)
G2 (M16) : To (R1)
F2 (M17) : Pillar speaker RH
F4 (M18) : Smart entrance control unit
F3 (M19) : Kickdown switch (A/T models)
E3 (M20) : Combination meter
E3 (M21) : Illumination control switch
E3 (M22) : A/T control unit (A/T models)
E3 (M23) : Combination flasher unit
E4 (M24) : Buzzer
E4 (M25) : Stop lamp switch
D2 (M26) : In-vehicle sensor (Auto A/C)
D3 (M27) : Air mix door motor
D3 (M28) : Mode door motor
C3 (M29) : Bi-level door motor
B4 (M30) : To (Z5)
D2 (M31) : Auto A/C unit (Auto A/C)
C3 (M32) : Push control unit (Except auto A/C)
C2 (M33) : Fan switch (Except auto A/C)
D4 (M34) : Hazard switch (For Europe)
C3 (M35) : Hazard switch (Except for Europe)
D4 (M36) : Headlamp washer switch (For Europe)
C3 (M37) : Rear window defogger switch
C3 (M38) : Rear fog lamp switch (For Europe)
D4 (M39) : Security indicator (Except for Europe)
C4 (M40) : Radio
C4 (M41) : Not used
C4 (M42) : Cigarette lighter
C4 (M43) : Diode (Except for Europe)
C3 (M44) : Diode (Except for Europe)
C2 (M45) : Joint connector
B1 (M46) : Sunload sensor (Auto A/C)
B1 (M47) : Not used (For Europe)
C2 (M48) : Intake door motor
C2 (M49) : Thermo control amplifier
C2 (M50) : Fan control amplifier (Auto A/C)
B2 (M51) : To (M109) (Except for Australia)
B3 (M52) : Fan resistor (Except auto A/C)
C3 (M53) : Blower motor
A1 (M54) : Pillar speaker LH
A2 (M55) : To (D101)
A2 (M57) : To (D102)
A3 (M58) : Joint connector (For Europe)
B4 (M60) : To (F4)
B4 (M62) : To (F7) (A/T models)
B4 (M63) : To (B51) (Models with ABS)
A3 (M66) : Mirror defogger relay (Except for Australia)
A4 (M67) : Body ground

B2 (M101) : To (M51)
A3 (M102) : Glove box lamp (Except for Australia)
A3 (M103) : Glove box lamp switch

Diode (M43) (M44)

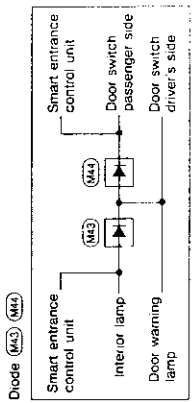

SEL868T

Engine Room Harness

ENGINE COMPARTMENT (LHD models)

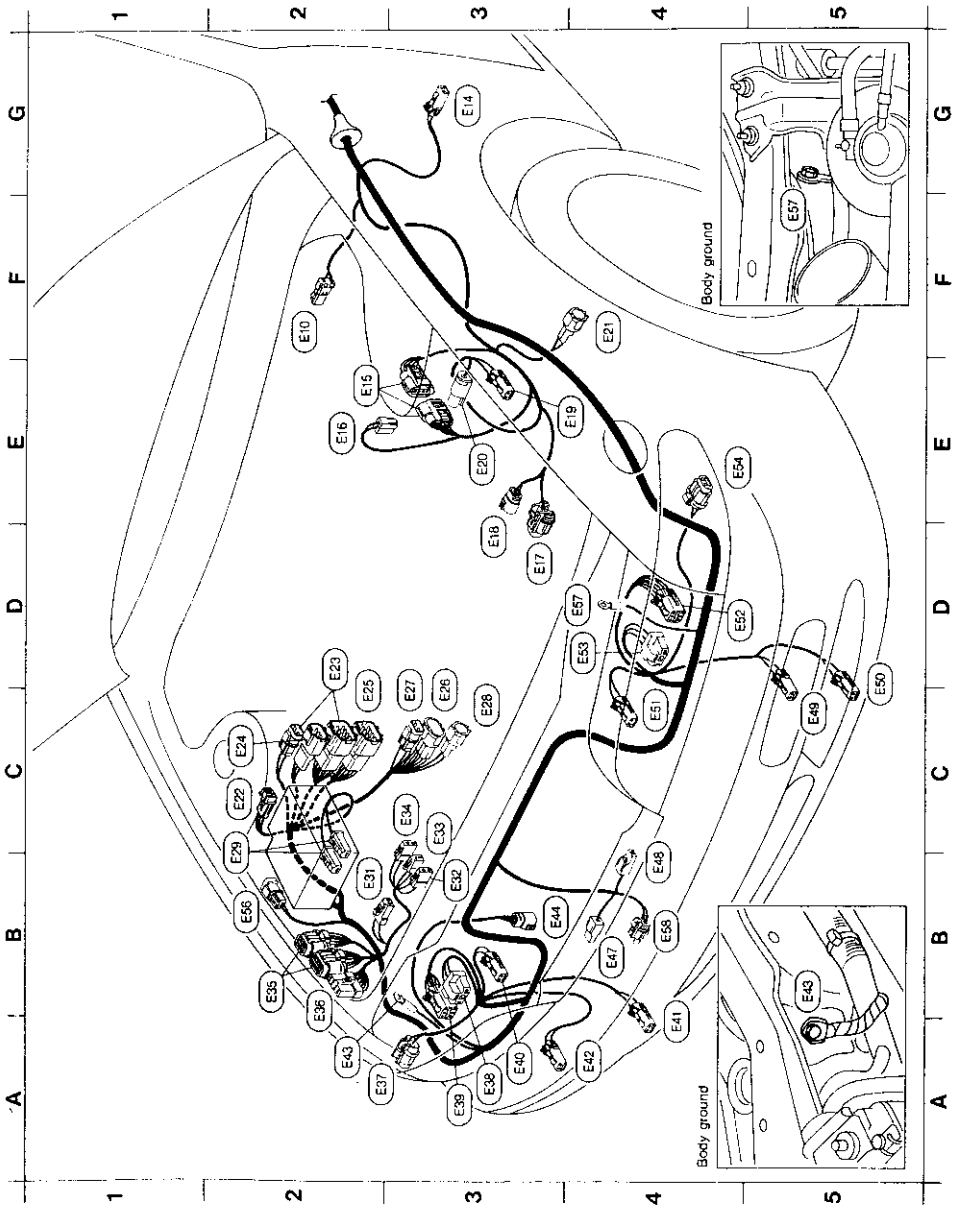

Engine Room Harness (Cont'd)

(E1) : Cooling fan relay-2
(E2) : Fusible link and fuse block-1
(E3) : Cooling fan relay-1
(E5) : Air conditioner relay
Fusible link and fuse box
(E6) : Horn relay
(E7) : Front fog lamp relay
(E8) : Fusible link and fuse block-2
(E9) : Fusible link and fuse block-3
F2 (E10) : Brake fluid level switch
G3 (E14) : Side turn signal lamp LH
E2 (E15) : Power transistor unit
E2 (E16) : Wastegate valve control solenoid valve
D3 (E17) : Compressor
D3 (E18) : Power steering oil pressure switch
E3 (E19) : Dropping resistor (A/T models)
E3 (E20) : Check connector
F4 (E21) : Front wheel sensor LH (For ABS)
C2 (E22) : Boost pressure sensor
D2 (E23) : Inhibitor switch (A/T models)
C2 (E24) : Revolution sensor (A/T models)
C2 (E25) : To terminal code assembly (A/T models)
C3 (E26) : To (E20)
C3 (E27) : To (E28)
C3 (E28) : To (E20)
B2 (E29) : Battery
B2 (E31) : Washer fluid level switch
B3 (E32) : Headlamp washer motor
C3 (E33) : Front washer motor
C3 (E34) : Rear washer motor
B2 (E35) : Daytime light unit
B2 (E36) : Headlamp washer amplifier
A2 (E37) : Clearance lamp RH
A3 (E38) : Headlamp RH outer
A3 (E39) : Headlamp aiming motor RH
A3 (E40) : Headlamp RH inner
A4 (E41) : Front fog lamp RH
A4 (E42) : Front turn signal lamp RH
A2 (E43) : Body ground
B3 (E44) : Cooling fan motor
B4 (E47) : Horn (High)
B4 (E48) : Horn (Low)
C5 (E49) : Front turn signal lamp LH
C5 (E50) : Front fog lamp LH
C4 (E51) : Headlamp LH inner
D4 (E52) : Headlamp aiming motor LH
D4 (E53) : Headlamp LH outer
E4 (E54) : Clearance lamp LH
B2 (E56) : To (F26)
D4 (E57) : Body ground
B4 (E58) : Ambient sensor (For outside temperature)

Fusible link and fuse box

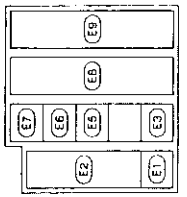

Front

Dropping resistor (E19)

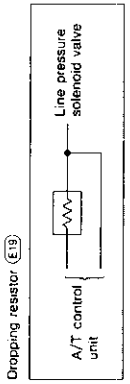

SEL869T

ENGINE COMPARTMENT (RHD models)

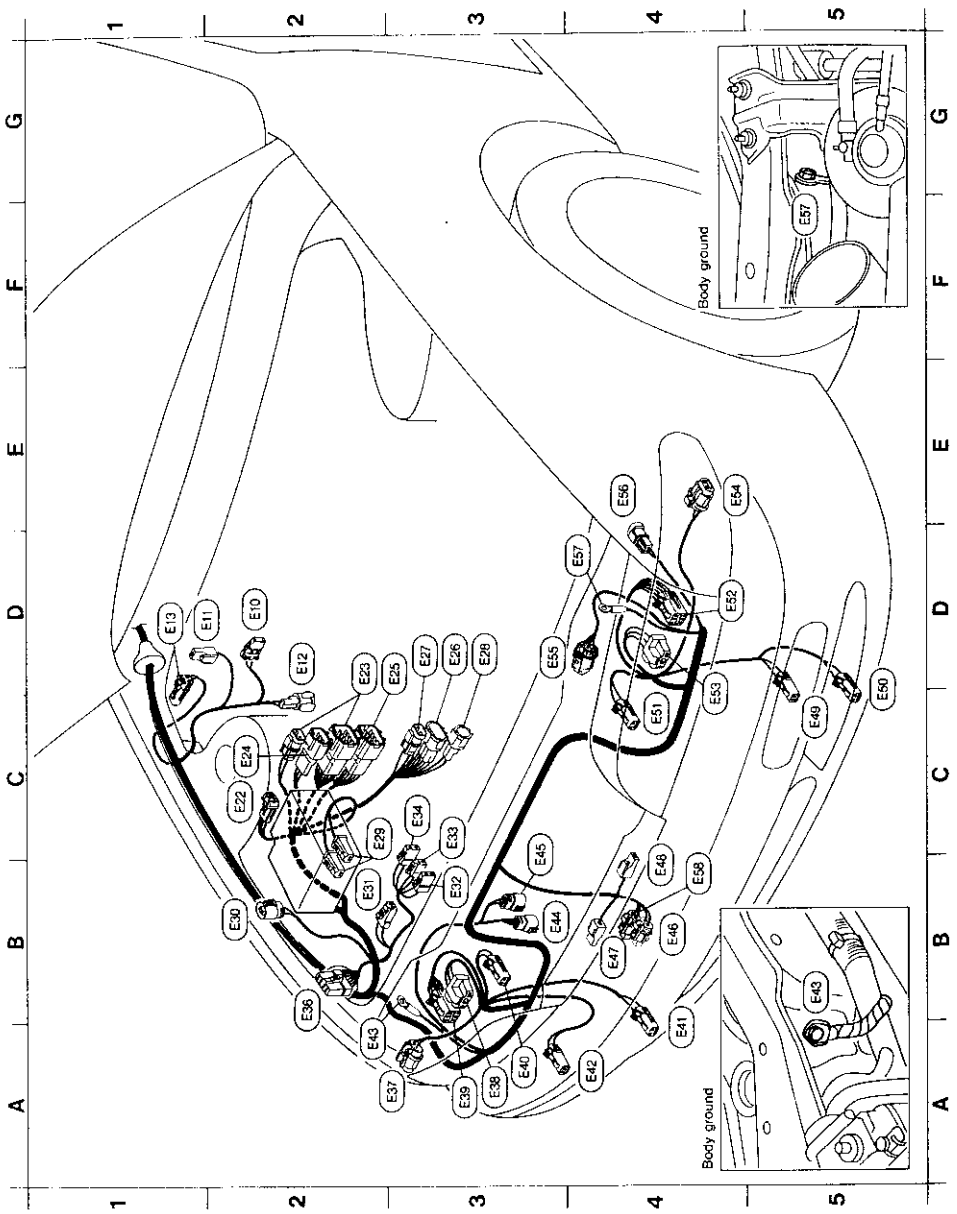

(E1) : Cooling fan relay-2 (Except for Europe)
(E2) : Fusible link and fuse block-1
(E3) : Cooling fan relay-1
(E4) : Theft warning relay (Except for Europe)
(E5) : Air conditioner relay
(E6) : Horn relay
(E7) : Theft warning horn relay (Except for Europe)
Front fog lamp relay (For Europe)
(E8) : Fusible link and fuse block-2
(E9) : Fusible link and fuse block-3
(E10) : Brake fluid level switch
(E11) : Theft warning horn (Except for Europe)
(E12) : Front wheel sensor RH (For ABS)
(E13) : Side turn signal lamp RH
(E22) : Boost pressure sensor
(E23) : Inhibitor switch (A/T models)
(E24) : Revolution sensor (A/T models)
(E25) : To terminal code assembly (A/T models)
(E26) : To (E20)
(E27) : To (E20)
(E28) : To (E20)
(E29) : Battery
(E30) : Hood switch (Except for Europe)
(E31) : Washer fluid level switch
(E32) : Headlamp washer motor (For Europe)
(E33) : Front washer motor
(E34) : Rear washer motor (Except for Australia)
(E35) : Headlamp washer amplifier (For Europe)
(E37) : Clearance lamp RH
(E38) : Headlamp RH outer
(E39) : Headlamp aiming motor RH (For Europe)
(E40) : Headlamp RH inner
(E41) : Front fog lamp RH
(E42) : Front turn signal lamp RH
(E43) : Body ground
(E44) : Cooling fan motor (Except for Europe)
(E45) : Cooling fan motor (For Europe)
(E46) : Ambient sensor (For auto A/C)
(E47) : Horn (High)
(E48) : Horn (Low)

(Fusible link and fuse box)

(E49) : Front turn signal lamp LH
(E50) : Front fog lamp LH
(E51) : Headlamp LH inner
(E52) : Headlamp aiming motor LH (For Europe)
(E53) : Headlamp LH outer
(E54) : Clearance lamp LH
(E55) : Triple-pressure switch
(E56) : To (E20)
(E57) : Body ground
(E58) : Ambient sensor (For outside temperature)

Fusible link and fuse box

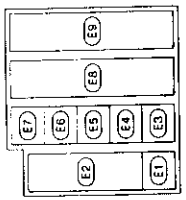

SEL871T

Engine Room Harness (Cont'd)

PASSENGER COMPARTMENT (LHD models)

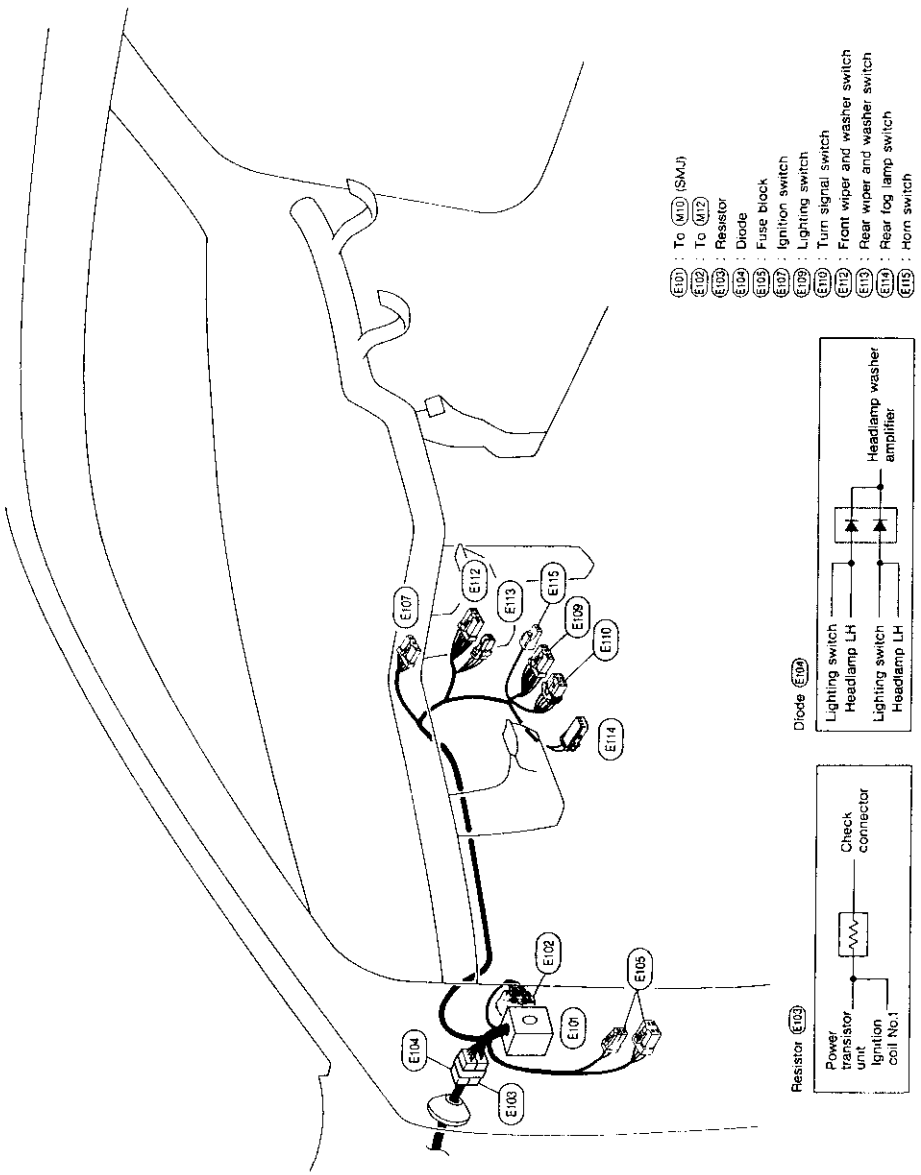

SEL870T

Engine Room Harness (Cont'd)

PASSENGER COMPARTMENT (RHD models)

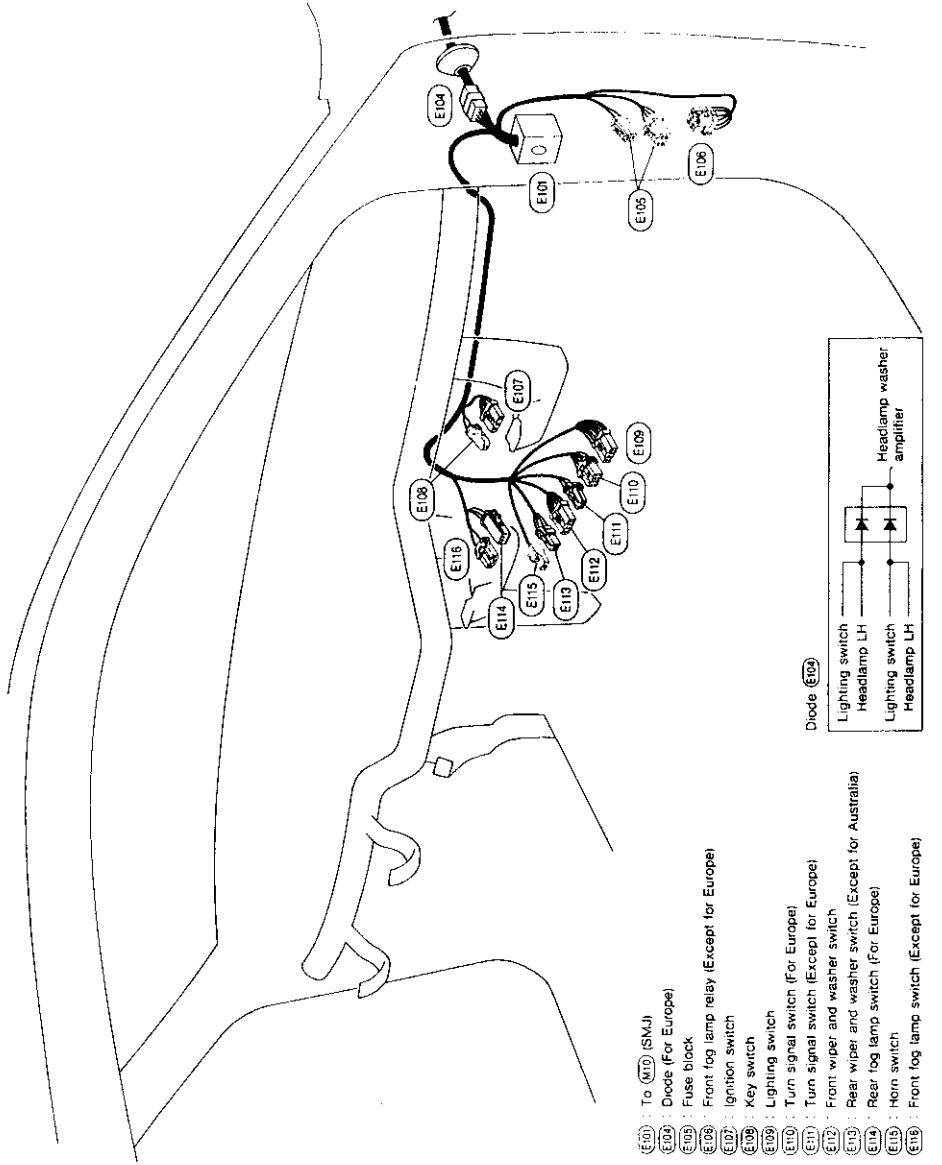

SEL872T

Engine Control Harness

LHD MODELS

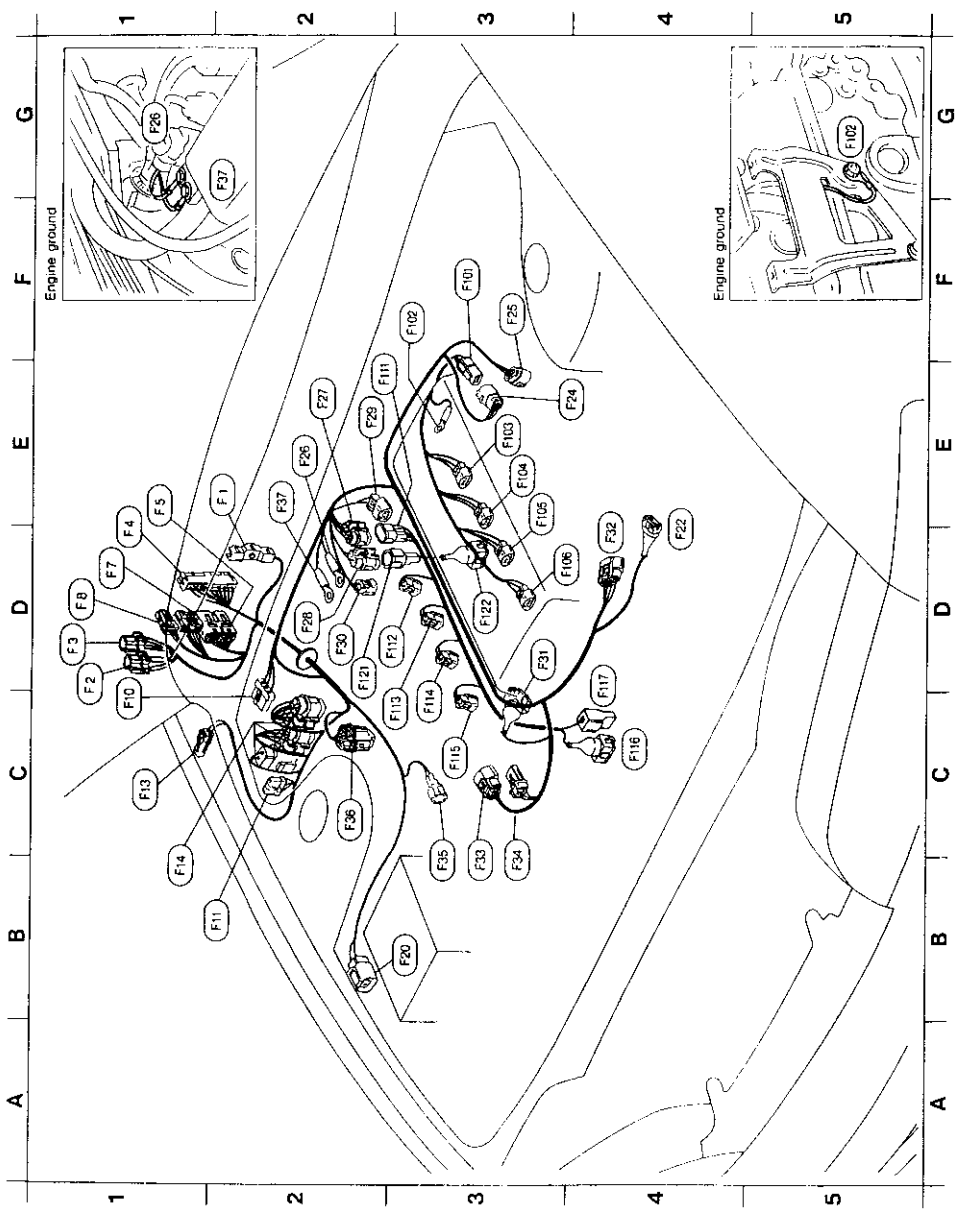

Engine Control Harness (Cont'd)

E2 : ECM (ECCS control module)
D1 : ECCS relay
D1 : Ignition coil relay
D1 : To (M66)
E1 : To (B53)
D1 : To (M62) (A/T models)
D1 : To (M65) (M/T models)
C1 : Front wiper motor
B2 : Front wiper amplifier
C1 : Side turn signal lamp RH
B1 : ABS actuator
B3 : To (E56)
D4 : Mass air flow sensor
E3 : To (F10)
F3 : Heated oxygen sensor
E2 : Engine ground
E2 : To (F11)
D2 : To (F12)
E2 : IACV-FICD solenoid valve
D2 : IACV-AAC valve
D3 : VTC solenoid valve
D4 : Camshaft position sensor
B3 : Throttle position sensor (Brown)
B3 : Throttle position switch (Gray) (A/T models)
B3 : Front wheel sensor RH (For ABS)
C2 : Triple-pressure switch
E2 : Engine ground

Sub-harness

F3 : To (F24)
F3 : Engine ground
E3 : Ignition coil No.4
E3 : Ignition coil No.3
E3 : Ignition coil No.2
D3 : Ignition coil No.1
E2 : To (F27)
D3 : Injector No.4
C3 : Injector No.3
C3 : Injector No.2
C3 : Injector No.1
C4 : Engine coolant temperature sensor
C4 : Thermal transmitter
D2 : To (F28)
D3 : Knock sensor

SEL873T

RHD MODELS

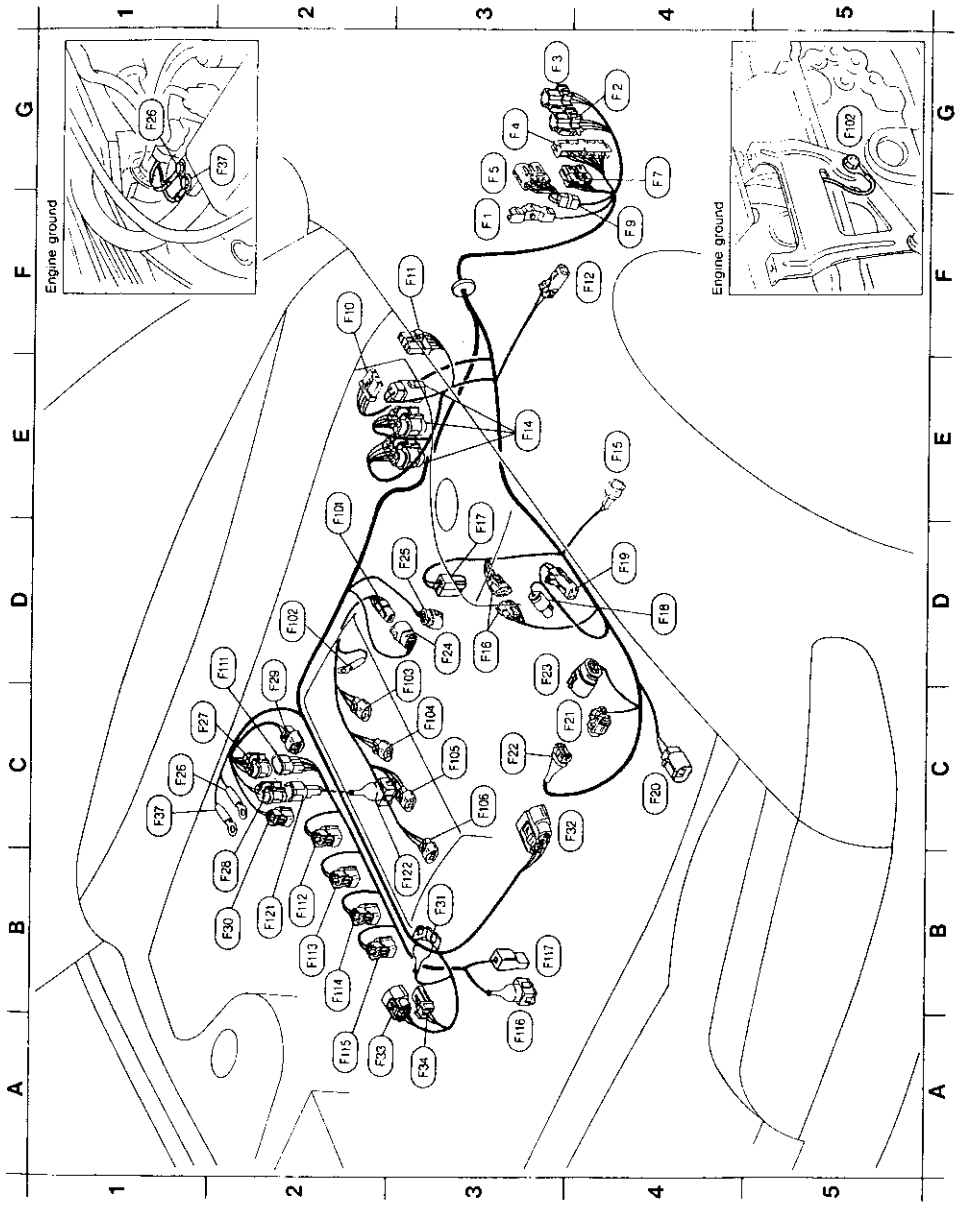

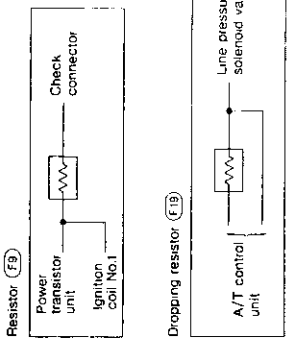

Sub-harness

F3	(F1)	: ECM (ECCS control module)	D2	(F101)	: To (F24)
G4	(F2)	: ECCS relay	D2	(F102)	: Engine ground
G3	(F3)	: Ignition coil relay	C3	(F103)	: Ignition coil No.4
G3	(F4)	: To (M69)	C3	(F104)	: Ignition coil No.3
G3	(F5)	: To (B5) (Model with ABS)	C3	(F105)	: Ignition coil No.2
G4	(F7)	: To (M62) (A/T models)	C3	(F106)	: Ignition coil No.1
F4	(F9)	: Resistor	D2	(F111)	: To (F27)
F2	(F10)	: Front wiper motor	B2	(F112)	: Injector No.4
F3	(F11)	: Front wiper amplifier	B2	(F113)	: Injector No.3
F4	(F12)	: Side turn signal lamp LH	B2	(F114)	: Injector No.2
E3	(F14)	: ABS actuator (For ABS)	A2	(F115)	: Injector No.1
E4	(F15)	: Front wheel sensor LH (For ABS)	A3	(F116)	: Engine coolant temperature sensor
D3	(F16)	: Power transistor unit	B3	(F117)	: Thermal transmitter
D3	(F17)	: Wastegate valve control solenoid valve	B2	(F121)	: To (F28)
D4	(F18)	: Check connector	B3	(F122)	: Knock sensor
D4	(F19)	: Dropping resistor (A/T models)			
C4	(F20)	: To (E56)			
C3	(F21)	: Compressor			
C3	(F22)	: Mass air flow sensor			
D3	(F23)	: Power steering oil pressure switch			
D3	(F24)	: To (F101)			
D3	(F25)	: Heated oxygen sensor			
C1	(F26)	: Engine ground			
C1	(F27)	: To (F111)			
B2	(F28)	: To (F121)			
C2	(F29)	: IACV-FICD solenoid valve			
B2	(F30)	: IACV-AAC valve			
B3	(F31)	: VTC solenoid valve			
C4	(F32)	: Camshaft position sensor			
A2	(F33)	: Throttle position sensor (Brown)			
A3	(F34)	: Throttle position switch (Gray) (A/T models)			
C1	(F37)	: Engine ground			

SEL874T

Engine Harness

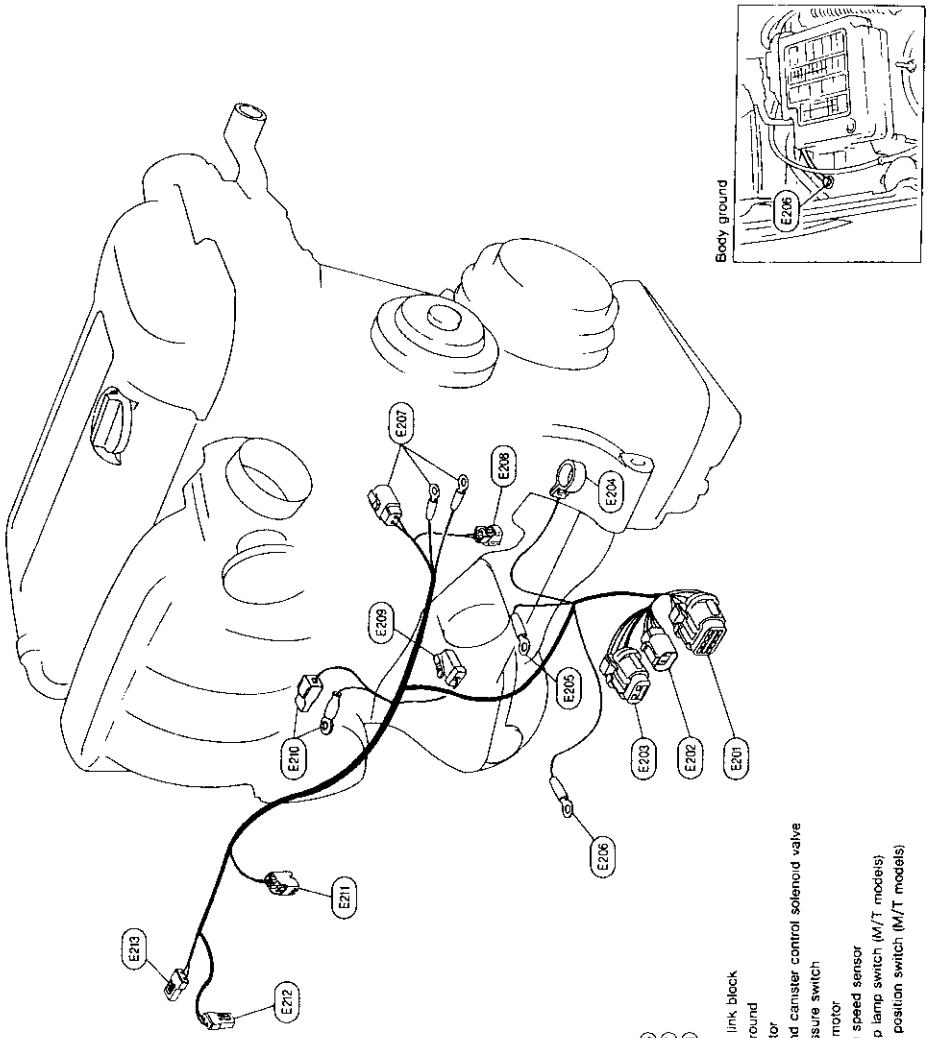

E201 : To E26
E202 : To E27
E203 : To E28
E204 : Battery
E205 : Fusible link block
E206 : Body ground
E207 : Alternator
E208 : EGR and canister control solenoid valve
E209 : Oil pressure switch
E210 : Starter motor
E211 : Vehicle speed sensor
E212 : Back-up lamp switch (M/T models)
E213 : Neutral position switch (M/T models)

SEL875T

NOTE

Body Harness

LHD MODELS

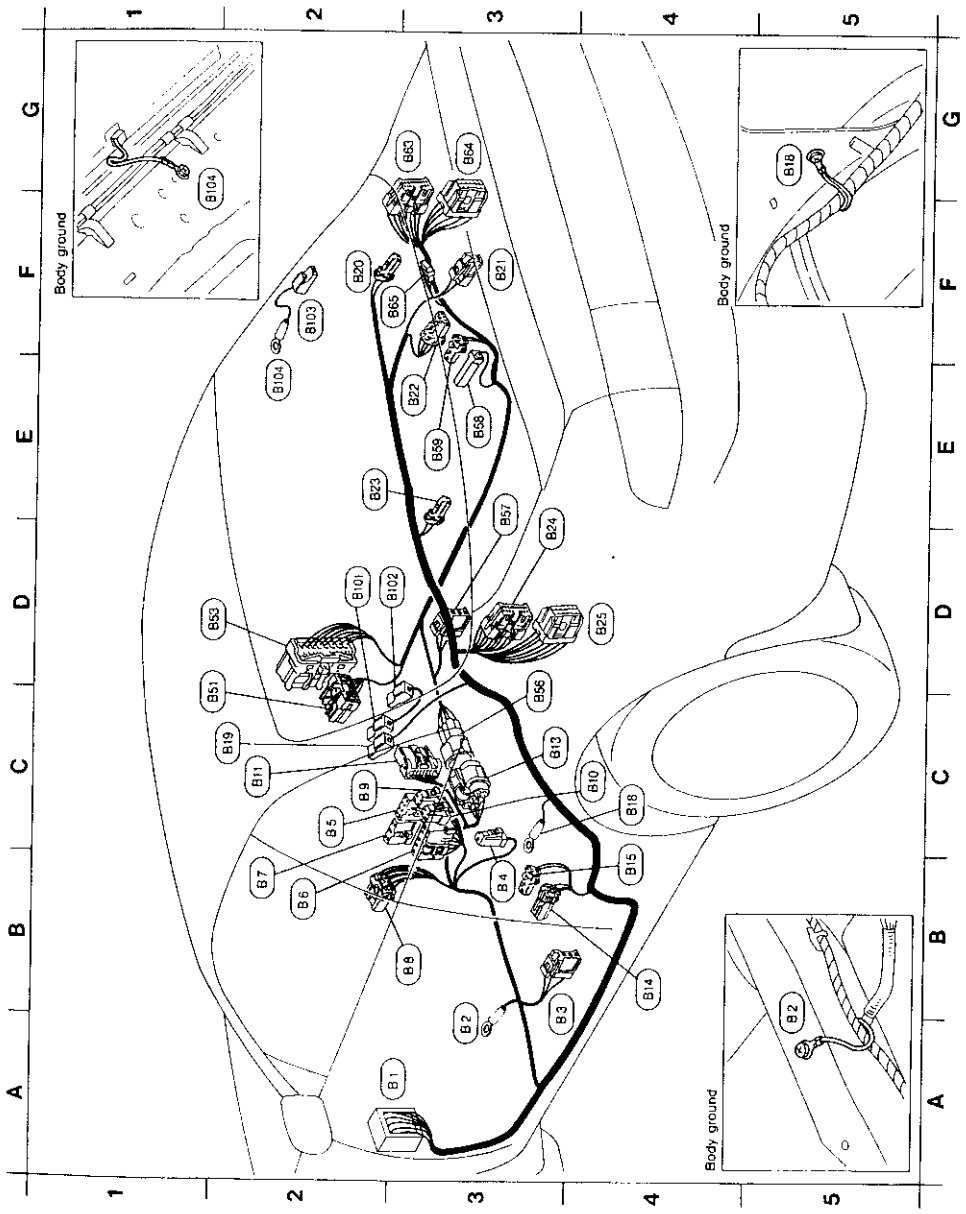

Body Harness (Cont'd)

Sub-harness

D2 (B100) : Condenser (For rear window defogger)
D2 (B102) : Rear window defogger (+)
F2 (B103) : Rear window defogger (−)
E2 (B104) : Body ground

A3 (B1) : To (M11)
A3 (B2) : Body ground
B3 (B3) : Heated seat LH
B3 (B4) : Parking brake switch
C2 (B5) : Headlamp aiming switch
B2 (B6) : Door mirror control switch
B2 (B7) : Front fog lamp switch
B3 (B8) : Overdrive switch • A/T illumination
C2 (B9) : Heated seat switch RH
C4 (B10) : Heated seat switch LH
C2 (B11) : To (Z2)
C3 (B13) : To (B56)
B4 (B14) : Door switch (Driver's side)
B4 (B15) : Seat belt pre-tensioner (Driver's side)
C4 (B18) : Body ground
C2 (B19) : Condenser (For rear window defogger)
F2 (B20) : Rear speaker RH
F3 (B21) : Trunk room lamp
E3 (B22) : Rear wiper motor
E2 (B23) : Rear speaker LH
D3 (B24) : To (T1)
D4 (B25) : To (T2)
C2 (B51) : To (M63)
D2 (B53) : To (F5)
C3 (B56) : To (B13)
E3 (B57) : Heated seat RH
E3 (B58) : Door switch (Passenger side)
E3 (B59) : Seat belt pre-tensioner (Passenger side)
G3 (B63) : To (T26)
G3 (B64) : To (T27)
F2 (B65) : Not used

SEL875T

RHD MODELS

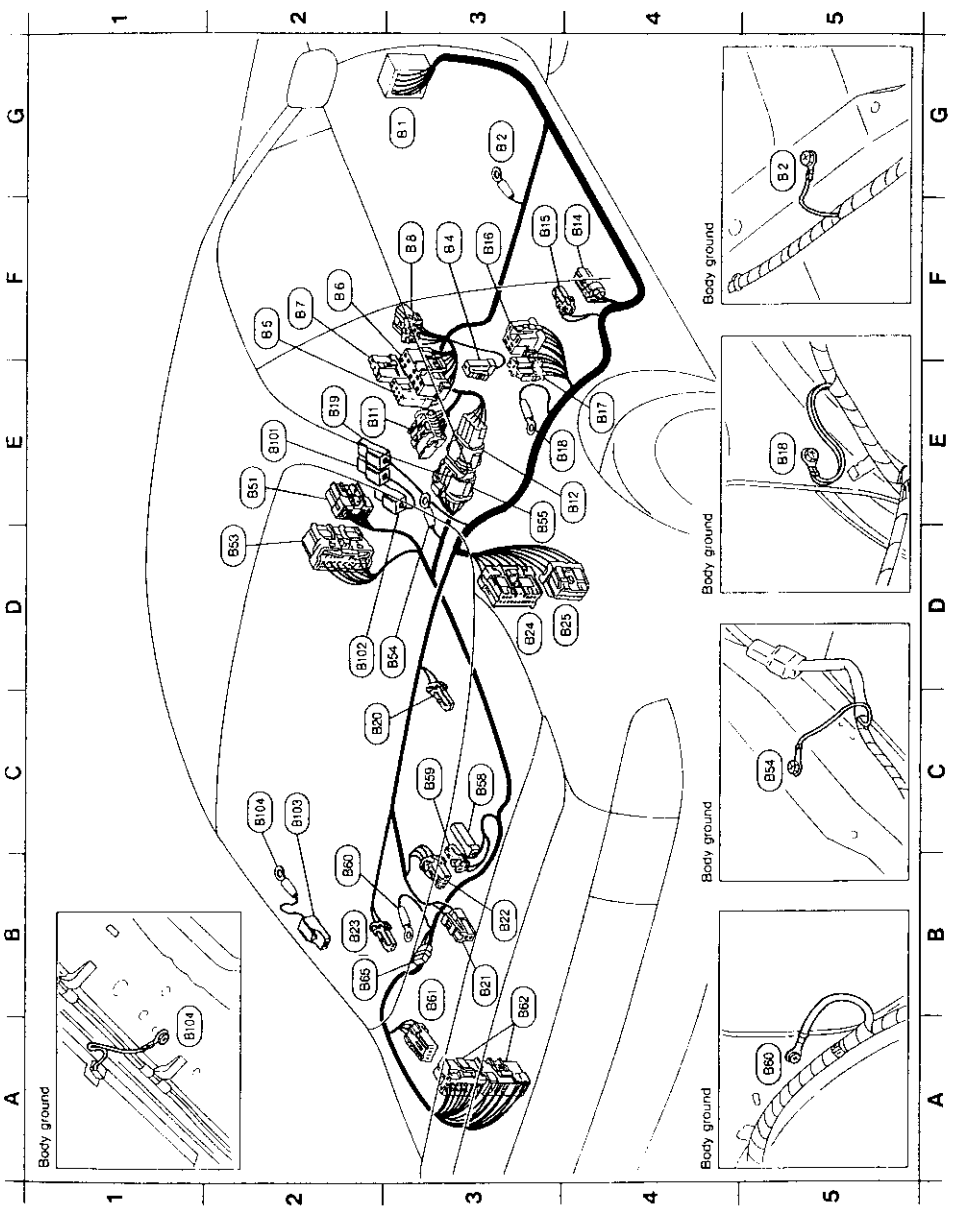

Sub-harness

E2 (B101) : Condenser (For rear window defogger)
D2 (B102) : Rear window defogger (+)
C2 (B103) : Rear window defogger (−)
C2 (B104) : Body ground

G3 (B1) : To (M11)
G3 (B2) : Body ground
F3 (B4) : Parking brake switch
F2 (B5) : Headlamp aiming switch (For Europe)
F2 (B6) : Door mirror control switch
F2 (B7) : Front fog lamp switch (For Europe)
F3 (B8) : Overdrive switch - A/T illumination
E2 (B11) : To (Z2)
E4 (B12) : To (B55)
F4 (B14) : Door switch (Driver's side)
F3 (B15) : Seat belt pre-tensioner (Driver's side) (For Europe)
F3 (B16) : Multi-remote control relay-1 (Except for Europe)
E4 (B17) : Multi-remote control relay-2 (Except for Europe)
E3 (B18) : Body ground
E2 (B19) : Condenser (For rear window defogger)
C2 (B20) : Rear speaker RH
B3 (B21) : Trunk room lamp
B3 (B22) : Rear wiper motor (Except for Australia)
B2 (B23) : Rear speaker LH
D3 (B24) : To (T1)
D4 (B25) : To (T2)
E2 (B51) : To (M63) (Models with ABS)
D2 (B53) : To (F5) (Models with ABS)
D3 (B54) : Body ground
E3 (B55) : To (B12)
C3 (B58) : Door switch (Passenger side)
C3 (B59) : Seat belt pre-tensioner (Passenger side) (For Europe)
B2 (B60) : Body ground (Models with ABS)
B3 (B61) : To (T24) (Models with ABS)
B3 (B62) : ABS control unit (For ABS)
B2 (B65) : Not used (For Europe)

SEL877T

Tail Harness

LHD MODELS

(T1) : To (824)
(T2) : To (825)
(T3) : High-mounted stop lamp
(T4) : Back-up lamp RH
(T5) : Trunk room lamp switch
(T7) : Back-up lamp LH
(T8) : Differential oil pump
(T9) : Fuel tank gauge unit
(T10) : Fuel pump
(T11) : Rear skid sensor (For ABS)
(T12) : Differential oil warning lamp switch
(T13) : Differential oil temperature switch
(T14) : Differential oil cooler relay-1
(T15) : Differential oil cooler relay-2
(T16) : Speed control amplifier
(T17) : Rear combination lamp RH
(T18) : Rear wiper relay
(T19) : Body ground
(T20) : Rear fog lamp
(T21) : License plate lamp
(T22) : Rear combination lamp LH
(T23) : Power antenna timer
(T24) : ABS control unit
(T26) : To (863)
(T27) : To (864)

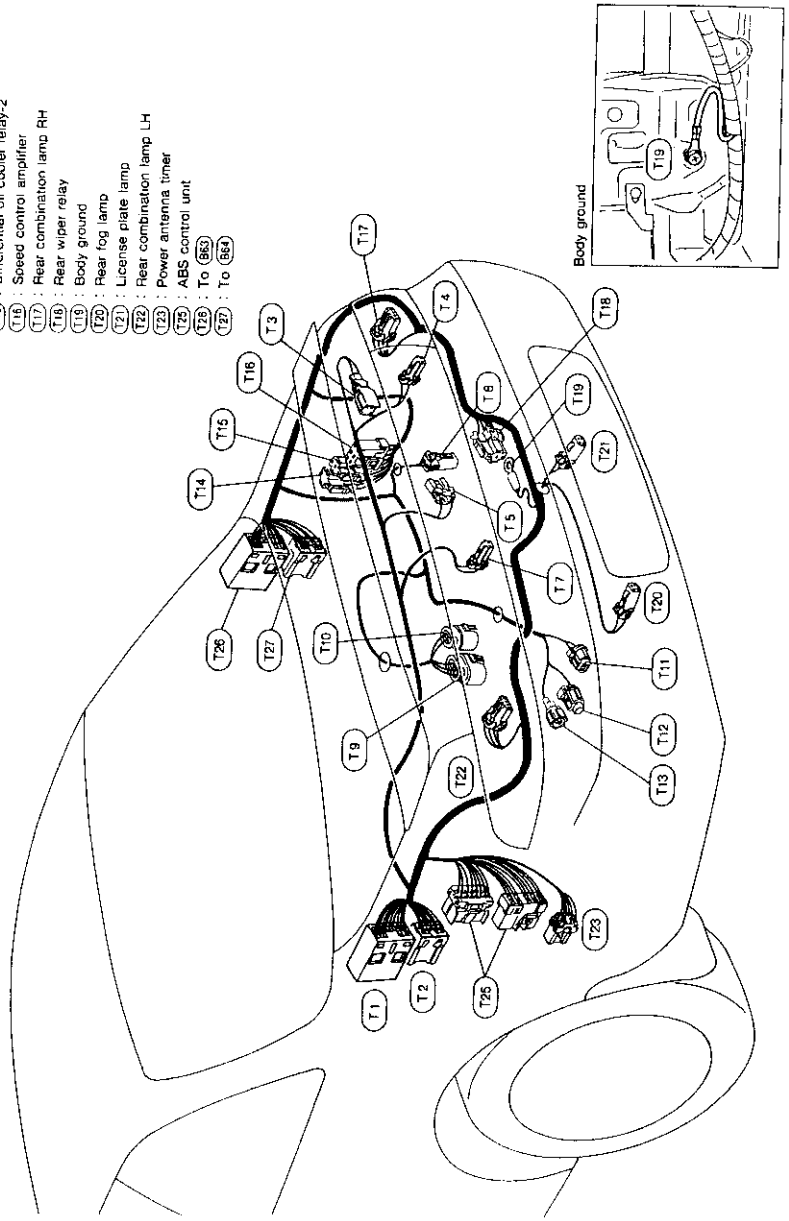

SEL678T

Tail Harness (Cont'd)

RHD MODELS

(T1) : To (824)
(T2) : To (825)
(T3) : High-mounted stop lamp
(T4) : Back-up lamp RH
(T5) : Trunk room lamp switch
(T6) : Trunk key cylinder switch (Except for Europe)
(T7) : Back-up lamp LH
(T8) : Differential oil pump (For Europe)
(T9) : Fuel tank gauge unit
(T10) : Fuel pump
(T11) : Rear skid sensor (For ABS)
(T12) : Differential oil warning lamp switch (For Europe)
(T13) : Differential oil temperature switch (For Europe)
(T14) : Differential oil cooler relay-1 (For Europe)
(T15) : Differential oil cooler relay-2 (For Europe)
(T16) : Speed control amplifier (For Europe)
(T17) : Rear combination lamp RH
(T18) : Rear wiper relay (Except for Australia)
(T19) : Body ground
(T20) : Rear fog lamp (For Europe)
(T21) : License plate lamp
(T22) : Rear combination lamp LH
(T23) : Power antenna timer
(T24) : To (861) (Models with ABS)

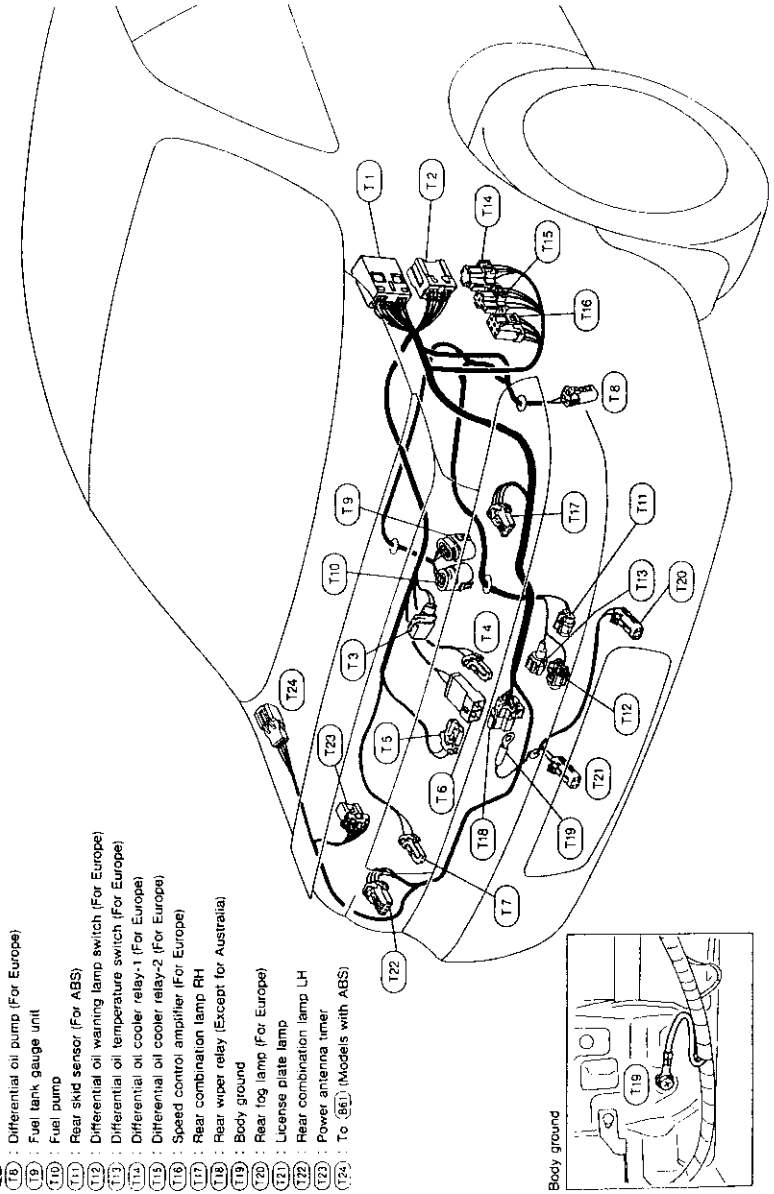

SEL879T

Room Lamp Harness

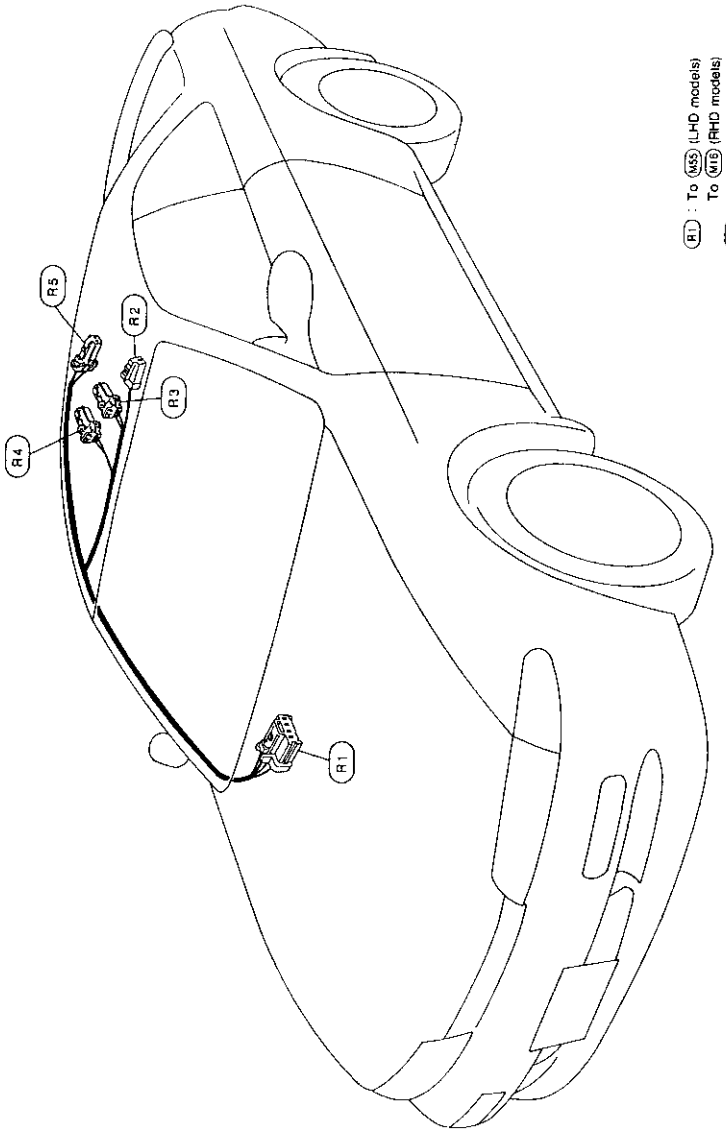

SEL880T

Air Bag and Seat Belt Pre-tensioner Harness

LHD MODELS

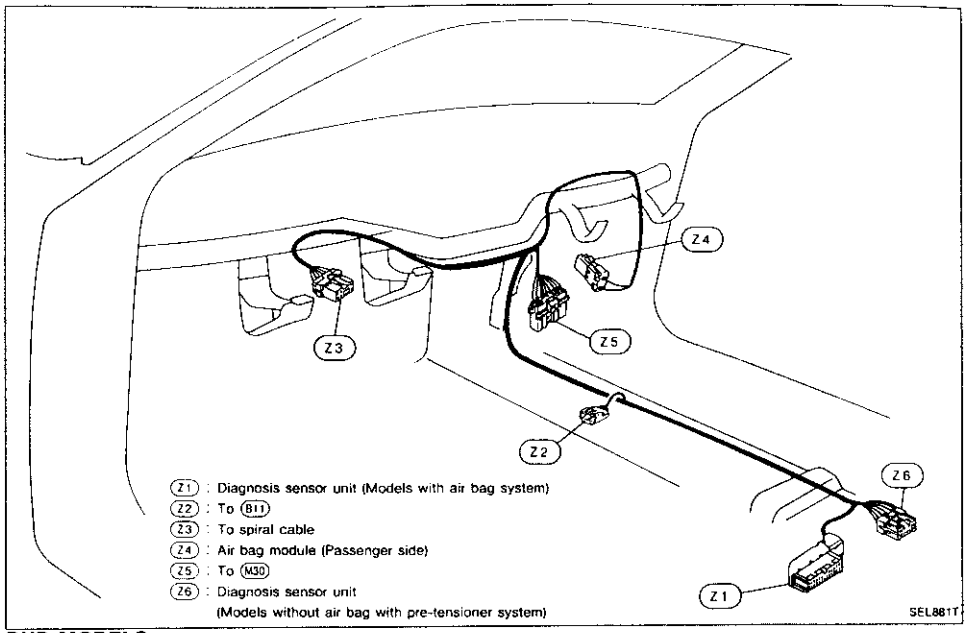

SEL881T

RHD MODELS

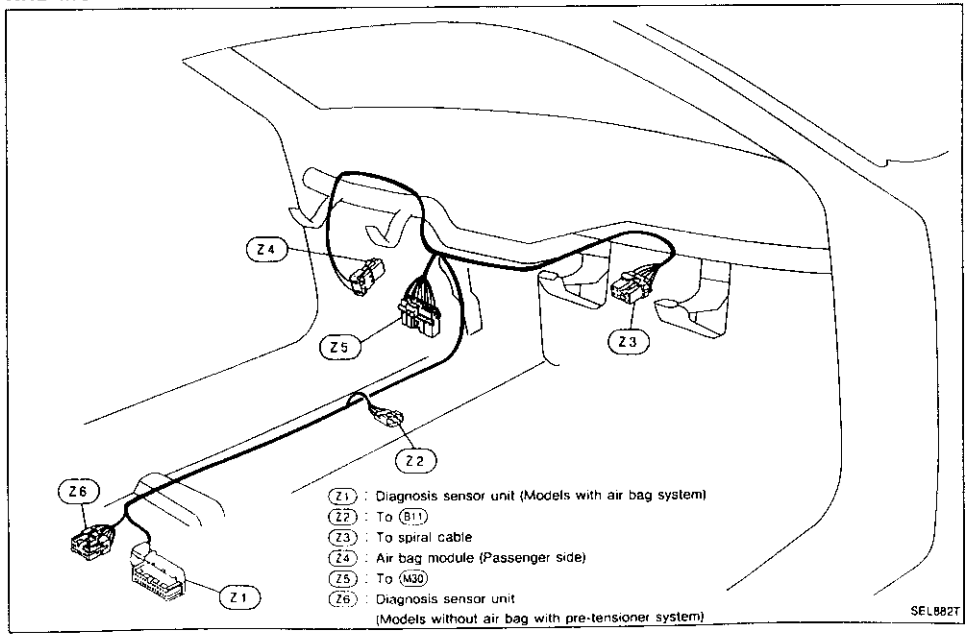

SEL882T

Door Harness (LHD models)

FRONT LH

(D1) : To (M14)
(D2) : To (M15)
(D3) : Door speaker
(D4) : Power window regulator
(D5) : Door mirror defogger
(D6) : Door mirror
(D8) : Power window amplifier
(D9) : Power window main switch
(D13) : Lock knob switch

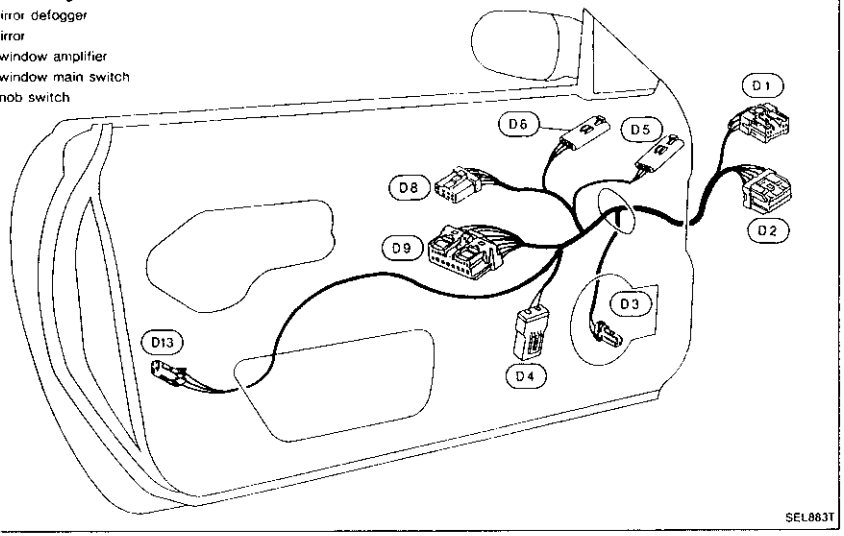

SEL883T

FRONT RH

(D101) : To (M56)
(D102) : To (M57)
(D103) : Door speaker

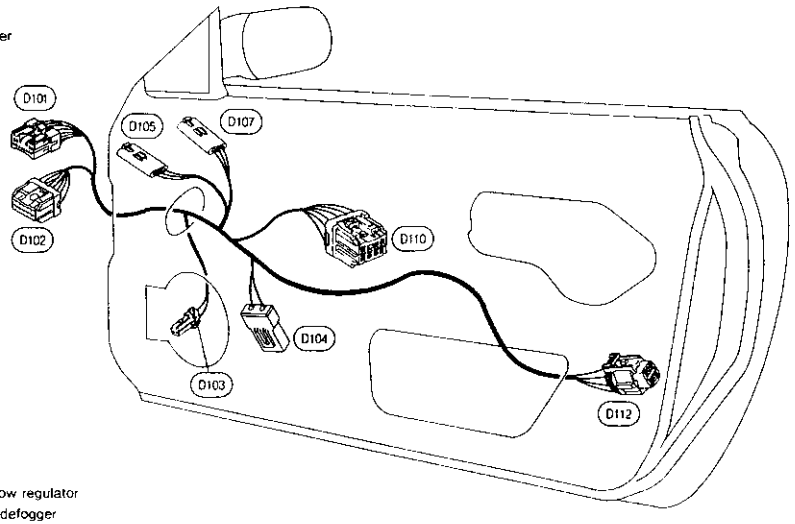

(D104) : Power window regulator
(D105) : Door mirror defogger
(D106) : Door mirror
(D110) : Power window sub-switch
(D112) : Door lock actuator

SEL884T

Door Harness (RHD models)

FRONT LH

(D101) : To (M56)
(D102) : To (M57)
(D103) : Door speaker
(D104) : Power window regulator
(D105) : Door mirror defogger
(D107) : Door mirror
(D110) : Power window sub-switch
(D111) : Key cylinder switch (Except for Europe)
(D112) : Door lock actuator

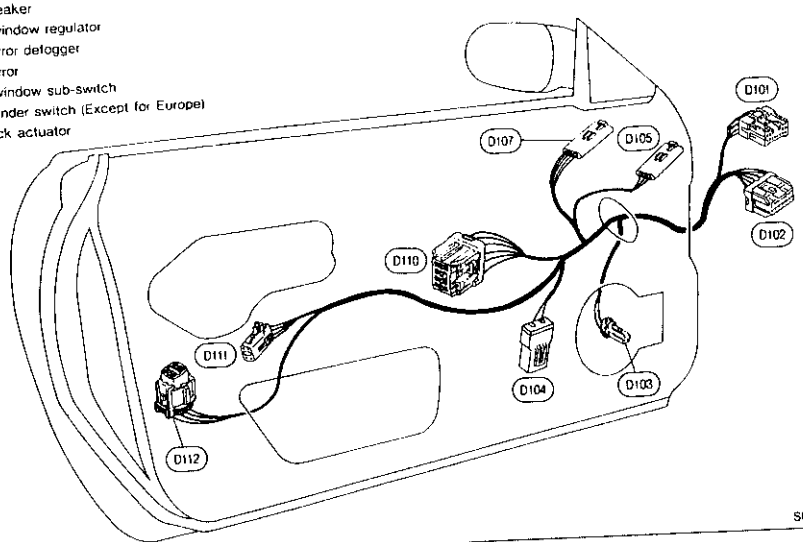

SEL885T

FRONT RH

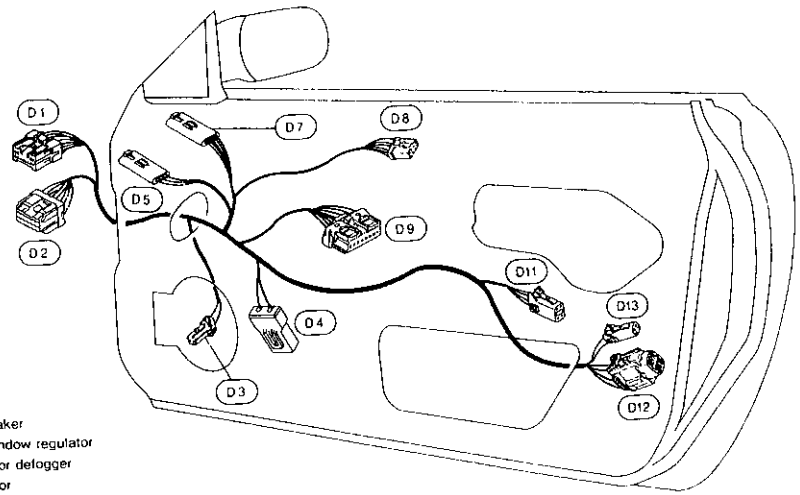

(D1) : To (M14)
(D2) : To (M15)
(D3) : Door speaker
(D4) : Power window regulator
(D5) : Door mirror defogger
(D7) : Door mirror
(D8) : Power window amplifier
(D9) : Power window main switch
(D11) : Key cylinder switch (Except for Europe)
(D12) : Door lock actuator (Except for Europe)
(D13) : Lock knob switch (For Europe)

SEL886T

A

ABS (anti-lock brake system) BR-24
ABS actuator BR-28
ABS circuit diagram BR-46
ABS component parts and connector locations BR-43
ABS control unit BR-28
ABS hydraulic circuit BR-24
ABS self-diagnosis BR-40
ABS symptom chart BR-42
ABS system components BR-25
ABS trouble diagnoses BR-39
ABS wheel sensors BR-27
ABS wiring diagram BR-29
A/C HFC134a (R134a) system precaution HA-3
A/C HFC134a (R134a) system service procedure HA-138
A/C HFC134a (R134a) system service tools HA-6
A/C HFC134a system service equipment precaution HA-8
A/C air flow HA-12
A/C circuit diagram (auto A/C) HA-103
A/C circuit diagram (manual A/C) HA-43
A/C component layout HA-11
A/C compressor clutch removal and installation HA-146
A/C compressor mounting HA-144
A/C compressor precaution HA-5
A/C compressor special service tool HA-5
A/C control linkage adjustment (auto A/C) HA-125
A/C control linkage adjustment (manual A/C) HA-70
A/C control operation (auto A/C) HA-73
A/C control operation (manual A/C) HA-13
A/C diagnostic work flow (auto A/C) HA-78
A/C diagnostic work flow (manual A/C) HA-15
A/C harness layout (auto A/C) HA-101
A/C harness layout (manual A/C) HA-33
A/C lubricant (R134a) HA-140
A/C operational check (auto A/C) HA-79
A/C operational check (manual A/C) HA-16
A/C performance chart HA-28
A/C performance test diagnoses HA-26
A/C push control HA-148
A/C relay HA-70
A/C self-dfiagnoses (auto A/C) HA-84
A/C symptom chart (auto A/C) HA-82
A/C symptom chart (manual A/C) HA-18
A/C system description (auto A/C) HA-127
A/C trouble diagnoses (auto A/C) HA-76
A/C trouble diagnoses (manual A/C) HA-14
A/C wiring diagram (auto A/C) HA-104
A/C wiring diagram (manual A/C) HA-45
Accelerator control system FE-2
Accelerator wire adjustment FE-2
Activated carbon canister EC-17
Air bag RS-5
Air bag disposal RS-12
Air bag precautions GI-2
Air bag removal and installation RS-9
Air bleeding for brake system BR-5
Air cleaner filter replacement MA-15
Air conditioner cut control EC-26
Air mix door control linkage adjustment (auto A/C) HA-125
Air mix door control linkage adjustment (manual A/C) HA-71
Air mix. door motor HA-131
Air spoiler, front - See Front air spoiler BT-38
Air spoiler, rear - See Rear air spoiler BT-38
Alternator EL-41
Ambient sensor HA-129
Angular tightening application EM-2
Antenna - See Power antenna EL-196
Anti-freeze coolant MA-10
AT diagnosis communication line EC-139
AT control unit AT-77
AT fluid temperature sensor AT-81
AT removal and installation AT-95
AT self-diagnoses AT-41
AT trouble diagnoses AT-10
Audio EL-190
Audio and A/C control removal and installation - See Instrument panel BT-14
Automatic amplifier HA-130
Automatic transmission fluid MA-10
Automatic transmission fluid replacement MA-20
Automatic transmission number GI-37
Auxiliary air control (AAC) EC-15
Axle housing (rear) RA-7

B

Back-up lamp EL-81
Back-up lamp switch (MT) MT-5
Ball joint front axle FA-14
Battery EL-20
Baulk ring (MT) MT-9
Belt inspection (drive belt) MA-12
Bi-level door control linkage adjustment (auto A/C) HA-126
Bi-level door control linkage adjustment (manual A/C) HA-71
Blower motor HA-68
Blower resistor HA-68
Board-on Lift GI-40
Body alignment BT-39
Boost pressure control EC-30
Boost pressure sensor EC-18, 128, 206
Boring/horning cylinder block EM-62
Brake booster BR-10
Brake control valve (Proportioning Valve) BR-4
Brake fluid MA-10
Brake fluid change BR-5
Brake fluid level MA-21
Brake fluid level and line check BR-5
Brake hydraulic line BR-3
Brake inspection MA-22
Brake lines and cables inspection MA-21
Brake master cylinder BR-8
Brake pedal BR-7
Bumper, front - See Front bumper BT-6
Bumper, rear - See Rear bumper BT-8

C

Camshaft inspection EM-40
Camshaft position sensor (CMPS) EC-12
Camshaft position sensor inspection EC-109, 201
Canister control EC-26
Canister control solenoid valve EC-16
Center bearing assembly (propeller shaft) PD-8
Center bearing disassembly (propeller shaft) PD-8
Charging system EL-38
Cigarette lighter EL-181
Circuit breaker EL-19
Clearance lamp EL-72
Clock EL-181
Clutch cover CL-10
Clutch disc CL-10
Clutch fluid MA-10
Clutch fluid level MA-19
Clutch master cylinder CL-6
Clutch operating cylinder CL-7
Clutch pedal CL-4
Clutch pedal free play CL-4
Clutch pedal height CL-4
Clutch release bearing CL-8
Clutch withdrawal lever CL-8
Coil spring (front) FA-12
Coil spring (rear) RA-19
Combination lamp, rear, removal and installation BT-26
Combination meter EL-114
Combination meter removal and installation - See Instrument panel BT-14
Combination switch EL-46
Compression pressure EM-12
Compressor clutch removal and installation HA-146
Compressor mounting HA-144
Compressor precaution HA-5
Compressor special service tool HA-5
Connecting rod EM-60
Connecting rod bearing clearance EM-65
Connecting rod bushing clearance EM-66
Console box - See Instrument panel BT-14
Consult for ECCS EC-53
Consult general information GI-33
Control lever (MT) MT-10
Control valve (AT) AT-117
Converter housing installation AT-96
Coolant replacement MA-12
Cooling circuit (engine) LC-10
Cooling fan LC-14
Cooling fan control EC-29
Cooling fan control system LC-14
Cooling fan motor inspection EC-176, 206
Cooling fan relay inspection EC-176, 206
Counter gear (MT) MT-9
Coupling sleeve (MT) MT-9
Crankcase emission control system EC-212
Crankshaft assembly EM-68
Crankshaft bearing clearance EM-63
Crankshaft inspection EM-62
Cylinder block EM-57
Cylinder block boring EM-62
Cylinder head EM-38
Cylinder head bolt tightening EM-26

D

Data link connector for Consult EC-53, 195
Daytime light system EL-56
Differential carrier assembly PD-24
Differential carrier disassembly PD-13
Differential gear oil MA-10
Differential gear oil replacement MA-21
Differential oil cooler system PD-29
Dimensions GI-38
Direct ignition system EC-33
Door glass BT-11
Door mirror BT-37
Door trim BT-19
Door, front - See Front door BT-10
Drive pinion diff. inspection PD-16
Drive pinion height PD-17
Drive plate runout EM-67
Drive shaft (rear) RA-11
Dropping resistor (AT) AT-83

E

ECCS basic inspection EC-63

ECCS circuit diagram EC-11
ECCS component parts location EC-5
ECCS fail-safe system EC-31
ECCS on-board diagnostic system EC-48
ECCS relay inspection EC-206
ECCS system diagram and chart EC-8
ECCS trouble diagnoses EC-41
ECM input/output signal inspection EC-196
EGR canister control solenoid valve inspection EC-148, 203
EGR control (EGRC) - BPT valve EC-16
EGR control (EGRC) - solenoid valve EC-16
EGR valve inspection EC-203
EGRC - BPT valve inspection EC-203
Electric sun roof EL-179
Electrical load signal circuit EC-192
Electrical units location EL-249
Electronic ignition (EI) system EC-22
Engine control module (ECM) EC-12
Engine coolant temperature sensor (ECTS) EC-13
Engine coolant temperature sensor inspection EC-116, 201
Engine oil MA-10
Engine oil filter replacement MA-16
Engine oil precautions GI-5
Engine oil replacement MA-15
Engine outer component parts EM-9
Engine removal EM-55
Engine serial number GI-37
Evaporative emission system EC-210
Exhaust gas recirculation (EGR) system EC-26
Exhaust gas recirculation (EGR) valve EC-16
Exhaust system FE-7
Exhaust system inspection MA-19
Exterior BT-22
Exterior lamp EL-72

F

Fan control amp. HA-137
Fan switch HA-68
Fast idle cam (FIC) EC-15
Fast idle cam (FIC) inspection and adjustment EC-207
Final drive disassembly PD-12
Final drive pre-inspection PD-13
Final drive removal and installation PD-10
Finisher, rear panel - See Rear panel finisher BT-25
Floor trim BT-17
Fluid temperature sensor (AT) AT-81
Fluids MA-10
Flywheel runout EM-67
Fog lamp, front EL-82
Fog lamp, rear - See Rear fog lamp EL-90
Fork rod (MT) MT-10
Forward clutch AT-136
Front air spoiler BT-38
Front axle FA-8
Front bumper BT-6
Front disc brake BR-12
Front door BT-10
Front fog lamp EL-82
Front seat BT-27
Front seat belt RS-3
Front suspension FA-11
Front washer EL-138
Front wiper EL-138
Fuel check valve inspection EC-211
Fuel filler lid BT-8
Fuel filter EC-17
Fuel filter replacement MA-14
Fuel gauge EL-115
Fuel injector EC-14
Fuel line inspection MA-14
Fuel precautions GI-5
Fuel pressure check EC-208
Fuel pressure regulator EC-14
Fuel pressure release EC-208
Fuel pump EC-14
Fuel pump control EC-25
Fuel pump inspection EC-159, 202
Fuel pump relay inspection EC-206
Fuel system FE-3
Fuel tank vacuum relief valve inspection EC-211
Fuse EL-19
Fusible link EL-19

G

Garage jack and safety stand GI-39
Gauges EL-113
Gears (MT) MT-9
Generator - See Alternator EL-41

H

Harness connector EL-5
Harness layout EL-253
Hazard warning lamp EL-93
Headlamp EL-49
Headlamp aiming control EL-64
Headlamp levelizer - See Headlamp aiming control EL-64
Headlamp washer EL-153
Headlamp wiper EL-153
Heated oxygen (H02S) heater control EC-29
Heated oxygen sensor (H02S) EC-14

Heated oxygen sensor heater inspection EC-152, 203
Heated oxygen sensor monitor EC-52
Heated seat BT-29, EL-200
Heater mirror EL-185
Heater wiring diagram HA-37
Height (Dimensions) GI-38
HFC134a (R134a) system precaution HA-3
HFC134a (R134a) system service procedure HA-138
HFC134a (R134a) system service tools HA-6
HFC134a system service equipment precaution HA-8
High clutch AT-134
Hood BT-6
Horn EL-181
How to follow flow chart in trouble diagnoses GI-30, 37
How to perform efficient diagnosis for an electrical incident GI-19
How to read wiring diagrams GI-9
How to use this manual GI-7
Hydraulic lash adjuster inspection EM-45

I

IACV - FICD solenoid valve inspection EC-172, 205
IACV-AAC valve inspection EC-169, 204
Identification plate GI-37
Idle air control (IAC) system EC-24
Idle air control valve (IACV) EC-15
Idle mixture ratio inspection EC-35
Idle speed inspection EC-35
Ignition coil inspection EC-120, 202
Ignition coil relay inspection EC-206
Ignition control system EC-120
Ignition timing inspection EC-35
Illumination EL-103
In-vehicle sensor HA-128
Inhibitor switch AT-82
Injector inspection EC-156, 205
Injector removal and installation EC-209
Instrument panel BT-14
Intake door control linkage adjustment (auto A/C) HA-126
Intake door control linkage adjustment (manual A/C) HA-71
Intake door motor HA-135
Intake manifold EM-35
Interior BT-17
Interior lamp EL-103, 110

K

Knock sensor (KS) EC-16
Knock sensor inspection EC-132, 205
Knuckle spindle FA-8

L

Length (Dimensions) GI-38
License lamp EL-72
Line pressure solenoid valve AT-81
Line pressure test (AT) AT-87
Liquid gasket application EM-2
Location of electrical units EL-249
Low and reverse brake AT-140
Lower ball joint (rear susp.) RA-20
Lubricant (R134a) A/C HA-140
Lubricants MA-10
Lubrication circuit (engine) LC-4
Lubrication-locks, hinges and hood latches MA-24

M

Magnet clutch HA-146
Main drive gear (MT) MT-9
Mainshaft (MT) MT-9
Maintenance (engine) MA-12
Maintenance MA-1
Maintenance general MA-4
Maintenance periodic MA-5
Malfunction indicator lamp (MIL) EC-195
Manual transmission number GI-37
Manual transmission oil MA-10
Manual transmission oil replacement MA-19
Mass air flow sensor (MAFS) EC-12
Mass air flow sensor inspection EC-113, 201
Master cylinder (brake) BR-8
Master cylinder (clutch) CL-6
Meter and gauges EL-113
MIL & Data link connectors circuit EC-195
Mirror, door - See Door mirror BT-37
Mode door control linkage adjustment (auto A/C) HA-125
Mode door control linkage adjustment (manual A/C) HA-70
Mode door motor HA-133
Model variation GI-34
Molding - See Exterior BT-22
MT overhaul MT-8
MT removal and installation MT-6
Multi link/lower ball joint (rear) RA-20
Multi purpose grease MA-10
Multi-remote control system EL-202

Multiport fuel injection (MFI) system EC-19
Multiport fuel injection precautions GI-4

N

Neutral position switch (MT) MT-5
Neutral position switch inspection EC-187

O

Oil cooler (engine) LC-9
Oil pan (engine) EM-13
Oil pressure (engine) LC-4
Oil pump (AT) AT-113
Oil pump (engine) LC-5
Oil pump regulator valve (engine) LC-7
Oil seal replacement (engine) EM-32
Oil seal replacement (front of final drive) PD-9
Oil seal replacement (side of final drive) PD-9
Operating cylinder (clutch) CL-7
Overdrive switch AT-82
Overrun clutch AT-136
Overrun clutch solenoid valve AT-81
Oversize piston EM-62

P

Parking brake control BR-22
PCV (positive crankcase ventilation) inspection EC-212
PCV filter replacement MA-17
Pilot bushing replacement EM-66
Pinion gear height diff. PD-17
Piston assembly EM-67
Piston pin inspection EM-59
Piston ring inspection EM-59
Piston to bore clearance EM-61
Power antenna EL-196
Power door lock EL-169
Power door mirror EL-175
Power steering fluid MA-10
Power steering fluid level MA-23, ST-6
Power steering gear ST-14
Power steering hydraulic pressure ST-8
Power steering oil pressure switch EC-15
Power steering oil pressure switch inspection EC-184, 206
Power steering oil pump ST-24
Power steering system bleeding ST-7
Power supply routing EL-8
Power transistor & ignition coil EC-15
Power transistor inspection EC-120, 202
Power window EL-157
Precautions (General) GI-2
Pressure plate - See Clutch cover CL-10
Pressure test (AT) AT-87
Propeller shaft PD-5
Propeller shaft on vehicle service PD-6
Propeller shaft vibration PD-6

R

Rack retainer adjustment ST-6
Radiator LC-15
Radio - See Audio EL-190
Rear air spoiler BT-38
Rear axle (disc brake type) RA-7
Rear bumper BT-8
Rear combination lamp removal and installation BT-26
Rear disc brake BR-16
Rear fog lamp EL-90
Rear panel finisher BT-25
Rear seat BT-30
Rear seat belt RS-4
Rear side window BT-36
Rear suspension RA-17
Rear washer EL-147
Rear window BT-35
Rear window defogger EL-185
Rear window signal EC-192
Rear wiper EL-147
Recirculation valve EC-17, 206
Refilling engine coolant LC-11
Refrigerant connection precaution HA-4
Refrigerant general precaution HA-3
Refrigerant lines HA-142
Refrigeration cycle HA-10
Release bearing (clutch) CL-8
Reverse clutch AT-130
Reverse gear (MT) MT-9
Reverse idler shaft (MT) MT-9
Revolution sensor (AT) AT-83
Ring gear diff. Inspection PD-16
Road wheel size GI-38
Roof trim BT-20

S

SAE J1930 terminology list GI-43
Seat belt inspection MA-24
Seat belt pre-tensioner RS-5
Seat belt pre-tensioner disposal RS-12
Seat belt pretensioner removal and installation RS-8
Seat belt, front - See Front seat belt RS-3
Seat belt, rear - See Rear seat belt RS-4
Seat, front - See Front seat BT-27

Seat, rear - See Rear seat BT-30
Self-diagnostic results EC-50
Shift control (MT) MT-10
Shift fork (MT) MT-10
Shift schedule AT-32
Shift solenoid valve (AT) AT-81
Shock absorber (rear) RA-19
Side bearing preload diff. PD-19
Side trim BT-17
Side window - See Rear side window BT-36
SMJ (super multiple junction) ..... Foldout page
Sodium-filled exhaust valve disposal EM-3
Spark plug replacement MA-16
Speedometer EL-115
Spot lamp EL-110
SRS Trouble diagnoses RS-17
Stabilizer bar (front) FA-13
Stabilizer bar (rear) RA-21
Stall test (AT) AT-84
Standardized relay EL-6
Starter EL-32
Starting system EL-28
Steering gear and linkage inspection MA-23
Steering linkage ST-14
Steering wheel and column ST-9
Steering wheel play ST-5
Steering wheel turning force ST-7
Stop lamp EL-80
Striking rod (MT) MT-10
Strut (front) FA-12
Sun roof BT-31
Sun roof, electric - See Electric sun roof EL-179
Sunload sensor HA-129
Supplemental Restraint System RS-5
Synchronizer (MT) MT-9

T

Tachometer EL-115
Tail lamp EL-72
Tension rod (front) FA-13
Theft warning system EL-218
Thermal protector HA-70
Thermo control amp HA-68
Thermostat LC-12
Three way catalyst precautions GI-4
Throttle position sensor (TPS) EC-13
Throttle position sensor inspection EC-135, 204
Throttle position switch inspection EC-203
Throwout bearing - See Clutch release bearing CL-8
Thrust washer selection diff. PD-24
Tie-rod ST-18
Tie-rod ball joints ST-18
Tightening torque of standard bolts GI-42
Timing chain EM-19
Tire rotation MA-21
Tire size GI-38
Tooth contact diff. PD-23
Torque converter clutch solenoid valve AT-81
Torque converter installation AT-96
Towing points GI-41
Transmission case (MT) MT-8
Transverse link (front) FA-14
Tread-FR&RR (Dimensions) GI-38
Trim BT-17
Triple pressure switch HA-69
Trunk lid BT-8
Trunk room lamp EL-110
Trunk room trim BT-21
Turbocharger EM-49
Turbocharger precautions GI-4
Turn signal lamp EL-93
Two-pole lift GI-40

V

Vacuum hose (brake system) BR-11
Vacuum hose drawing (ECCS) EC-10
Valve guide inspection EM-42
Valve seat inspection EM-43
Valve spring inspection EM-45
Valve timing control (VTC) EC-27
Valve timing control solenoid valve EC-17
Vapor lines inspection MA-17
Vehicle identification number GI-35
Vehicle speed sensor (VSS) EC-16
Vehicle speed sensor inspection EC-145, 202
Viscosity number (SAE) MA-11
VTC solenoid valve inspection EC-166, 205

W

Warning buzzer EL-130
Warning lamps EL-122
Washer, front EL-138
Washer, rear EL-147
Wastegate valve control solenoid valve EC-17, 163, 205
Water pump LC-11
Water temperature gauge EL-115
Weatherstrip - See Exterior BT-22
Wheel alignment (front) FA-5
Wheel alignment (rear) RA-5
Wheel balance MA-21
Wheel bearing (front axle) FA-5
Wheel bearing (rear) RA-5
Wheel hub (front) FA-8
Wheel hub (rear) RA-7
Wheel hub and steering knuckle FA-8

Wheel sensors (ABS) BR-27
Wheelbase (Dimensions) GI-38
Width (Dimensions) GI-38
Window, rear - See Rear window BT-35
Window, side - See Rear side window BT-36
Windshield BT-35
Wiper, front EL-138
Wiper, rear EL-147
Withdrawal lever (clutch) CL-8

Disconnecting and Connecting

- SMJ is located on left side of dash.
- To disconnect SMJ, loosen fixing bolt.

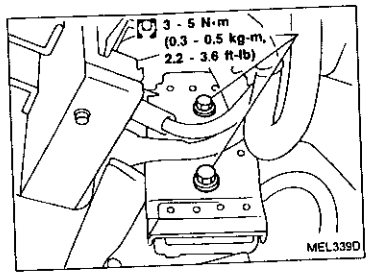

- To install SMJ, tighten bolts until orange "full-tight" mark appears and then retighten to specified torque as required.
  : 3 - 5 N·m
  (0.3 - 0.5 kg-m, 2.2 - 3.6 ft-lb)

CAUTION:
Do not overtighten bolts, otherwise, they may be damaged.

Terminal Arrangement

LHD MODELS

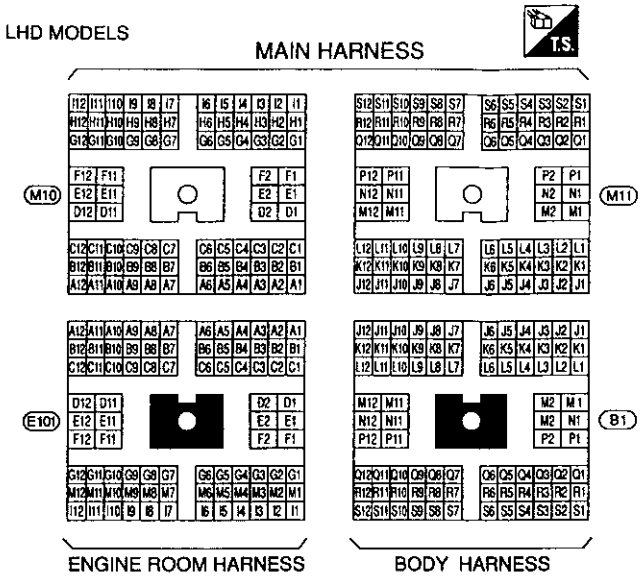

RHD MODELS

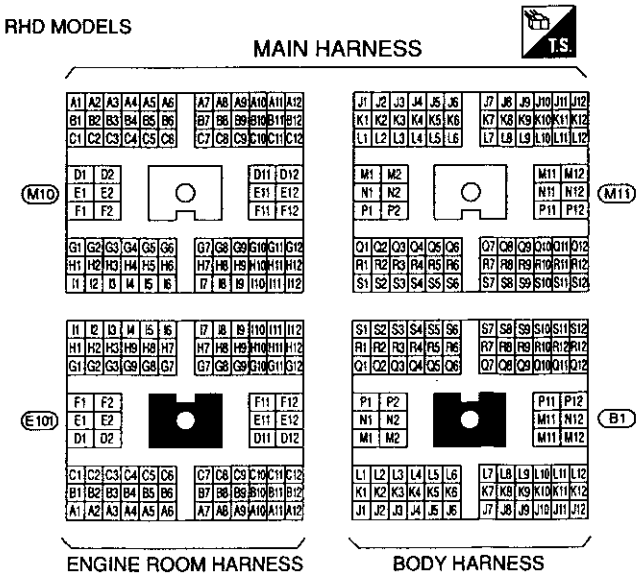

Terminal Arrangement (Cont'd)

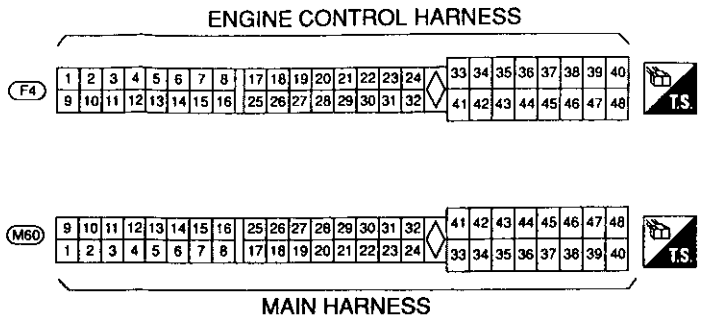

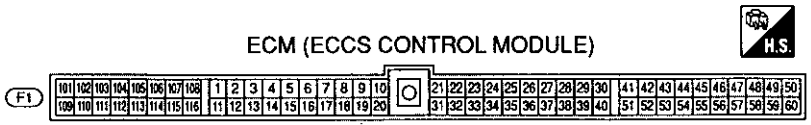

View from harness side

View from harness side

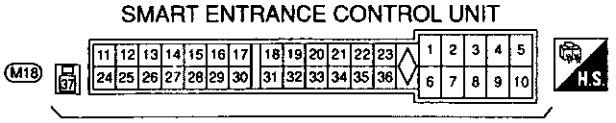

View from harness side

Engine Control

System utilizing timers with enhanced real-time processing functions, high-precision A-D converter, and high-speed processing.
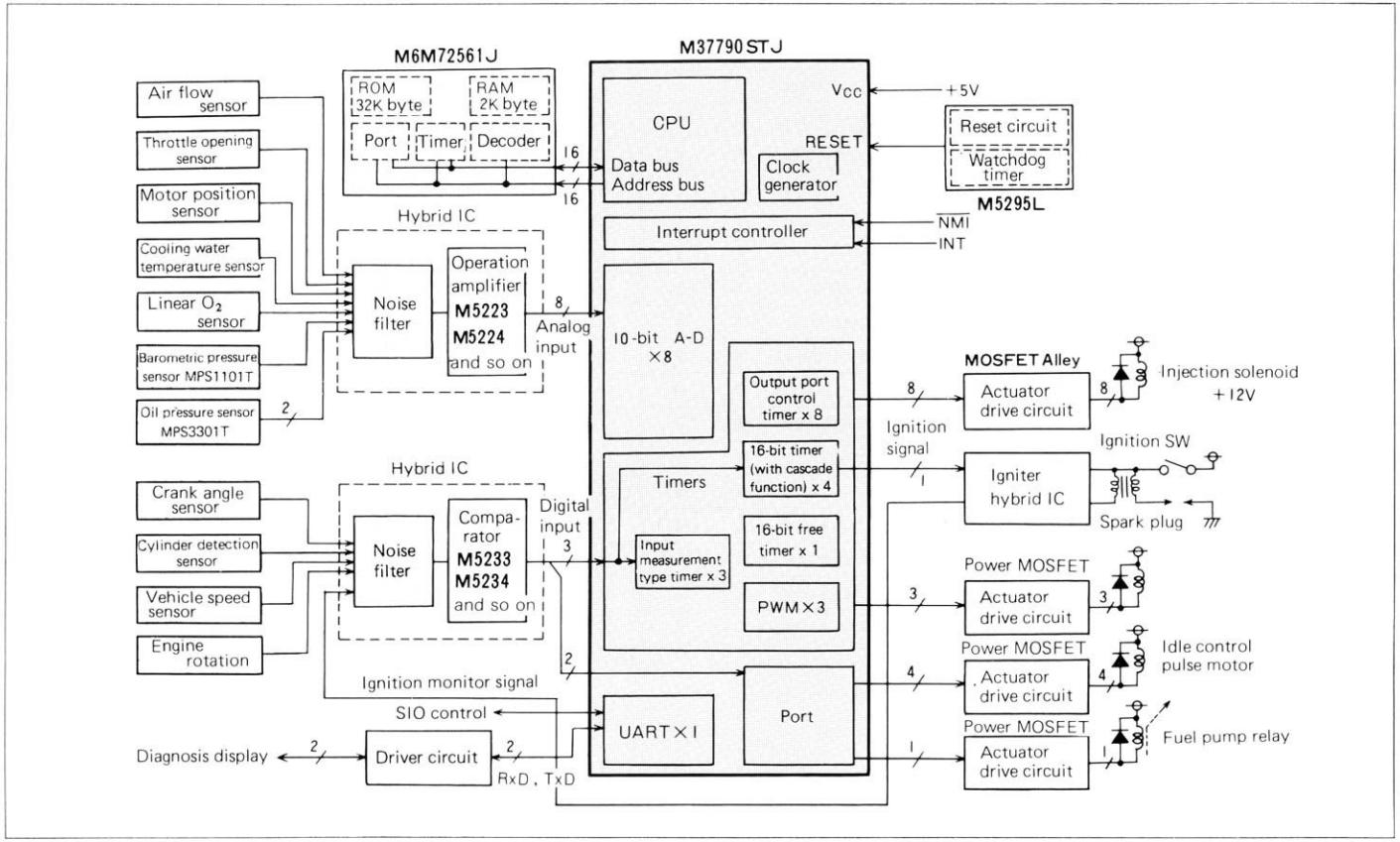
Memory with large internal ROM and RAM (M6M72561J) is used.